JORDAN SCHOOL DISTRICT
JORDAN LEARNING CENTER

3706 WEST 9800 SOUTH
SOUTH JORDAN, UT 84009
JSD Bid #25KP03
CONSTRUCTION DOCUMENTS
AUGUST 29, 2024

ARCHITECTURE
MHTN ARCHITECTS, INC.
280 SOUTH 400 WEST
SUITE 250
SALT LAKE CITY, UTAH 84111
PHONE: (801) 595-6700

STATE OF UTAH
CLIFFORD HOWARD CURTIS
No. 7394786-0301
2/8 AUGUST 2024
LICENSED ARCHITECT

CIVIL
GALLOWAY
515 SOUTH 700 EAST, STE 3F
SALT LAKE CITY, UT 84102
PHONE: (801) 953-1357

REGISTERED PROFESSIONAL ENGINEER
No. 11435453-2202
DEVIN LUJAN
08/29/2024
STATE OF UTAH

LANDSCAPE
MHTN ARCHITECTS, INC.
280 SOUTH 400 WEST
SUITE 250
SALT LAKE CITY, UTAH 84111
PHONE: (801) 595-6700

STATE OF UTAH
VINCENT RULON OLCOTT
No. 4812865
08-29-2024
LICENSED LANDSCAPE ARCHITECT

STRUCTURAL
REAVELEY ENGINEERS
675 E 500 S #400
SALT LAKE CITY, UT 84102
PHONE: (801) 486-3883

PROFESSIONAL STRUCTURAL ENGINEER
No. 4838789-2202
JUSTIN D. NADAULD
STATE OF UTAH
08/29/24

MECHANICAL
OLSEN & PETERSON
CONSULTING ENGINEERS
14 EAST 2700 SOUTH
SALT LAKE CITY, UT 84105
PHONE: (801) 486-4646

LICENSED PROFESSIONAL ENGINEER
#334524-2202
JAMES AUSTIN BERRETT
8/29/2024
UTAH

ELECTRICAL
BNA CONSULTING
635 S STATE STREET
SALT LAKE CITY, UT 84111
PHONE: (801) 532-2196

PROFESSIONAL ENGINEER
8/29/2024
BRIAN HICKS
No. 7709032-2202
STATE OF UTAH

SOUND DESIGN
BNA CONSULTING
635 S STATE STREET
SALT LAKE CITY, UT 84111
PHONE: (801) 532-2196

PROFESSIONAL ENGINEER
8/29/2024
BRIAN HICKS
No. 7709032-2202
STATE OF UTAH

MHTN ARCHITECTS
MHTN Architects, Inc.
280 South 400 West
Suite 250
Salt Lake City, Utah 84101
Telephone (801) 595-6700
www.mhtn.com

JORDAN SCHOOL DISTRICT
JORDAN LEARNING CENTER
3706 WEST 9800 SOUTH
SOUTH JORDAN, UT 84009

©2023 MHTN ARCHITECTS, INC.
Confidentiality Notice:
This document is intended for use on the Project identified herein by individuals and companies involved in the design, permitting, bidding and construction of the Project. MHTN Architects, Inc. grants limited rights to distribute and reproduce this document for this express purpose only. Distribution, printing or copying this document for purposes other than those indicated is strictly prohibited. If a digital copy of this document is received in error, please delete it.

SEAL

STATE OF UTAH
CLIFFORD HOWARD CURTIS
No. 7394786-0301
2/8 AUGUST 2024
LICENSED ARCHITECT

MHTN PROJECT NO 2024528

VIEW AND PRINT THIS DRAWING IN COLOR

Original drawing is 30 x 42. Do not scale contents of this drawing.

REVISIONS:
CONTRACTOR TO VERIFY DRAWINGS IN FIELD USE REFLECT LAST REVISION DATE.

NO.	DATE	DESCRIPTION

ISSUE
CONSTRUCTION DOCUMENTS
AUGUST 29, 2024

SHEET NAME
COVER SHEET

SHEET NUMBER
G000

Original drawing is 30 x 42. Do not scale contents of this drawing.

Autodesk Docs://2024528 JSD Retail Remodel/A24 2024528 JSD Retail Remodel.rvt
8/28/2024 8:28:07 AM

JORDAN SCHOOL DISTRICT
JORDAN LEARNING CENTER
3706 WEST 9800 SOUTH
SOUTH JORDAN, UT 84009
JSD BID NUMBER 25KP03
CONSTRUCTION DOCUMENTS
AUGUST 29, 2024

ABBREVIATIONS

AC	AIR CONDITIONING
AFF	ABOVE FINISH FLOOR
ALT	ALTERNATE
ALUM	ALUMINUM
APPROX	APPROXIMATE
ARCH	ARCHITECTURAL
AWS	ADJUSTABLE WALL SHELF
BD	BOARD
BLDG	BUILDING
BLKG	BLOCKING
BO	BOTTOM OF
BOT	BOTTOM
BRB	BUCKLING RESTRAINED BRACE
BRG	BEARING
CB	CATCH BASIN
CFMF	COLD FORMED METAL FRAMING
CFOI	CONTRACTOR FURNISHED OWNER INSTALLED
CIP	CAST-IN-PLACE
CJ	CONTROL JOINT
CL	CENTER LINE
CLG	CEILING
CLR	CLEAR
CMU	CONCRETE MASONRY UNIT
CO	CLEANOUT, CLEAR OPENING
COL	COLUMN
COMM	COMMUNICATION
CONC	CONCRETE
CONF	CONFERENCE
CONST	CONSTRUCT, CONSTRUCTION
CONT	CONTINUOUS
COORD	COORDINATE
CORR	CORRIDOR
CTR	CENTER
CTTD	COMBINED TOILET TISSUE DISPENSER
DB	DECK BEARING ELEVATION
DCS	DIAPER CHANGING STATION
DEMO	DEMOLITION
DF	DRINKING FOUNTAIN
DIA	DIAMETER
DIAG	DIAGONAL
DIM	DIMENSION
DN	DOWN
DR	DOOR
DTL	DETAIL
DWG	DRAWING
EIFS	EXTERIOR INSULATION AND FINISH SYSTEM
EJ	EXPANSION JOINT
EL	ELEVATION
ELEC	ELECTRICAL
ELEV	ELEVATOR
EQ	EQUAL
EQUIP	EQUIPMENT
EWC	ELECTRICAL WATER COOLER
EXP	EXPANSION
EXT	EXTERIOR
FD	FLOOR DRAIN
FEC	FIRE EXTINGUISHER CABINET
FIN	FINISH
FIN FLR	FINISH FLOOR
FLR	FLOOR
FM	FLOOR MOUNTED
FT	FOOT, FEET
GA	GAUGE, GAGE
GB	GYPSUM BOARD
GI	GALVANIZED IRON
GLULAM	GLUED-LAMINATED TIMBER
GTB	GLASS-MAT TILE BACKING BOARD
GYP BD	GYPSUM BOARD
HD	HAND DRYER
HRD	WALL MOUNTED HAIR DRYER
HVAC	HEATING, VENTILATION, AIR CONDITIONING
ID	INSIDE DIAMETER
IGB	IMPACT RESISTANT GYPSUM BOARD
INT	INTERIOR
ISO	ISOMETRIC
JAN	JANITOR
JT	JOINT
KD	KNOCK DOWN
LAB	LABORATORY
LAV	LAVATORY
MAINT	MAINTENANCE
MAX	MAXIMUM
MECH	MECHANICAL
MEZZ	MEZZANINE
MFR	MANUFACTURER
MH	MANHOLE
MIN	MINIMUM
MISC	MISCELLANEOUS
MO	MASONRY OPENING
NIC	NOT IN CONTRACT
NO	NUMBER
NOM	NOMINAL
NTS	NOT TO SCALE
OC	ON CENTER
OD	OUTSIDE DIAMETER
OFOI	OWNER FURNISHED OWNER INSTALLED
OFCI	OWNER FURNISHED CONTRACTOR INSTALLED
OH	OVERHEAD
OH DR	OVERHEAD DOOR
OPP	OPPOSITE
PERP	PERPENDICULAR
PL	PLATE, PROPERTY LINE
PLAM	PLASTIC LAMINATE
PLBG	PLUMBING
PLYWD	PLYWOOD
PR	PAIR
PREFAB	PREFABRICATED
PTD	PAPER TOWEL DISPENSER
PTWR	PAPER TOWEL / WASTE RECEPTACLE
QTY	QUANTITY
RD	ROOF DRAIN
RE:	REFER TO
REINF	REINFORCE, REINFORCING
REQD	REQUIRED
REF	REFRIGERATOR
RH	ROBE HOOK
RM	ROOM
RO	ROUGH OPENING
RTU	ROOF TOP UNIT
RV	ROOF VENT
SCD	SEAT COVER DISPENSER
SD	SOAP DISPENSER
SF	SQUARE FEET
SIM	SIMILAR
SNVU	SANITARY NAPKIN VENDING UNIT
SNDU	SANITARY NAPKIN DISPOSAL UNIT
SPEC	SPECIFICATION
SQ	SQUARE
STD	STANDARD
STL	STEEL
STRUCT	STRUCTURAL
SUSP	SUSPENDED
THK	THICK, THICKNESS
TO	TOP OF
TOB	TOP OF BEAM
TOD	TOP OF DECK
TOS	TOP OF SLAB, TOP OF STRUCTURE
TOW	TOP OF WALL
TTD	TOILET TISSUE DISPENSER
TYP	TYPICAL
UNO	UNLESS NOTED OTHERWISE
VCT	VINYL COMPOSITION TILE
VERT	VERTICAL
VEST	VESTIBULE
VTR	VENT THROUGH ROOF
W	WITH
W/O	WITHOUT
WC	WATER CLOSET
WD	WOOD
W	WIDE FLANGE
WH	WATER HEATER
WMS	WALL MOUNTED SHELF
WR	WASTE RECEPTICAL
WWF	WELDED WIRE FABRIC
XFMR	TRANSFORMER

GENERAL SYMBOLS

SEE PLUMBING, MECHANICAL AND ELECTRICAL FOR DISCIPLINE SYMBOLS

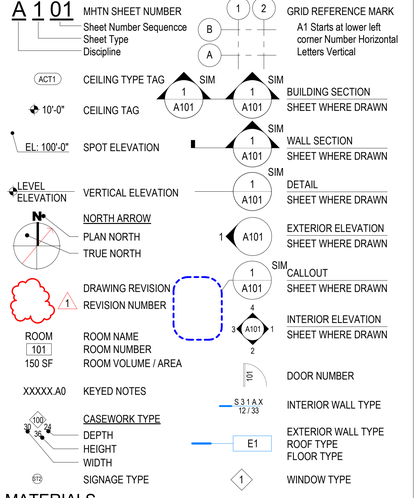

MATERIALS

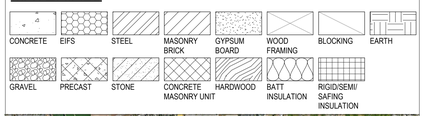

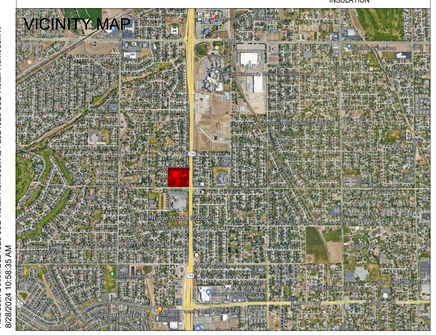

Autodesk Docs://2024528 JSD Retail Remodel/A24 2024528 JSD Retail Remodel.rvt
8/28/2024 10:58:35 AM

PROJECT DATA

CIVIL RIGHTS
ADA Standards for Accessible Design, 2010

APPLICABLE CODES & STANDARDS
International Building Code, including Appendices C & J (IBC), 2021 ed.
International Mechanical Code (IMC), 2021 ed.
International Plumbing Code (IPC), 2021 ed.
National Electrical Code (NEC), 2020 ed.
International Energy Conservation Code (IECC), 2021 ed., Prescriptive
ICC/ANSI A117.1, 2017 ed.
International Existing Building Code (IEBC), 2021 ed., Prescriptive
International Fire Code (IFC), 2021 ed.
International Fuel Gas Code (IFGC), 2021 ed.

CRITERIA

Occupancy Classification E

Separation of Occupancies Non-separated

Construction Type IIB

Sprinkled Yes

Building Height
Allowable Height (Stories/Feet) 3/75
Actual Building Height (Stories/Feet) 1/24

Building Area *(insert floors as needed)*
1st Floor 40,901 SF

Allowable Building Area Calculation

Single Occupancy, One Story
At = *58,000*

Fire-Resistance Ratings for Building Elements (IBC Table 601)

Construction Type:	IIB
Primary Structural Frame	0
Exterior Bearing Walls	0
Interior Bearing Walls	0
Exterior Non-Bearing Walls	0
Interior Non-Bearing Walls	0
Floor Construction & Associated Secondary Members	0
Roof Construction & Associates Secondary Members	0
Interior Exit Stairway (IBC Sec. 1023)	NA
Exit Access Stairway (IBC Sec. 1019)	NA
Two Story Vertical Openings (IBC Sec. 712.1.9)	NA
Shafts (IBC Sec. 713.4)	NA

Climate Zone: 5

PROJECT GENERAL REMODEL NOTES

Verify in Field (VIF): Field verify all dimensions and conditions at the site before submitting a bid or proceeding with any portion of the work.

Cut and Patch: Cut and patch existing building construction as required. Cutting and drilling of structural members not detailed requires the written permission of the structural engineer.

Conflicts: Whenever questions arise or conditions are encountered which are not covered by, or are in conflict with, the contract documents, consult with the Architect prior to taking any further action.

Demolish, Remove: Terms are used interchangeably to indicate detaching or tearing down items from existing construction and legally disposing of them off-site unless indicted to be removed and salvaged or removed and reinstalled.

Existing to Remain: Existing items of the building that are not to be permanently removed and that are not otherwise indicated to be demolished, removed, removed and salvaged or removed and reinstalled.

Equipment Relocation: Relocate existing mechanical and electrical as required for installation of new work.

Material Disposal: Legally dispose of all demolished or removed existing material, unless noted otherwise.

Salvage Material: Coordinate with the owner for removal of existing material noted to be returned to the owner. Removal shall be by the owner unless noted otherwise.
Phasing: coordinate phasing of the work with the Owner and the Architect to meet the owner's schedule.

Protection & Cleaning: Contain all construction activity within construction barricades or fences. Protect owner's existing facilities and property adjacent to new construction. During and after work of this contract is complete, clean existing areas affected by the work to the owner's satisfaction.

Protect all existing conditions that remain during demolition work. Repair any damage due to new work.

Repair & Replacement: Repair or replace existing facilities or property damaged by new construction. Match existing surface finish or material.

Patch & Repair: Patch and repair existing walls, floors, ceilings, landscaping, paving or other surfaces affected by demolition to match the existing material and finish.

Core Drilling Walls and Slabs:
Use ground penetrating radar or other approved method to scan concrete over metal deck, concrete suspended slabs, masonry walls, and concrete walls to locate rebar prior to core drilling any holes. Holes shall be located to avoid rebar detected. All openings and groups of openings shall be reinforced as shown on the structural drawings. Submit openings not shown on the structural drawings to the Structural Engineer for review prior to drilling.

PROJECT GENERAL NOTES

Building Codes: Comply with requirements of the adopted editions of the international code council codes, the codes and standards referenced within the ICC codes and the Americans with Disabilities Act.

Dimensions: Metal stud walls are dimensioned to face of metal stud, unless noted otherwise. Masonry walls are dimensioned to face of masonry.

Special Inspections: An Owner-provided, AHJ approved Independent Agency will provide Special Inspections of the following Architectural Components:

Per IBC Sec 1705.12.5 (in Seismic Design Category D, E, or F:
- Erection and Fastening of:
  - Exterior Cladding
  - Interior Nonbearing Walls
  - Exterior Nonbearing Walls
  - Interior Veneer
  - Exterior Veneer

Per Section 1705.12.7 (in Seismic Design Category D, E, or F):
- Storage Racks 8 Feet or Higher

Per Section 1705.14:
- Sprayed Fire-resistant Materials

Per Section 1705.15:
- Mastic and Intumescent Fire-Resistant Coatings applied to structural elements and decks

Per Section 1705.16:
- Application of Exterior Insulation and Finish Systems (EIFS)

Deferred Submittals:
- Automatic Fire Sprinkler System
- Fire Alarm
- Interior Demountable Partition System
- Seismic Restraints for Equipment (Mechanical, Plumbing, Electrical)
- Guards and Handrails

Specifications: Refer to the specifications for descriptions of products, materials and systems. The terms "SEE SPECS," "RE: SPECS" or similar references to the specifications have been omitted from drawing notes, but the requirement is still the same, to refer to the technical specifications for descriptions, installation requirements and other requirements as described therein.

Symbols: Where symbols and legends are used to indicate a product or system, provide those items in the quantity indicated by the symbol. Where plumbing fixtures, equipment, light fixtures and other similar products are shown on Architectural drawings, refer to the appropriate discipline drawings for type, utilities and other requirements.

Details: Terms such as "see specs," "re: mechanical" and so forth have been omitted from these details. All details require the general contractor and sub-contractors to refer to other drawings and specifications as required to understand and provide the items indicated and to provide supporting items that may or may not be shown.

The continuous nature of the materials shown in the details is inferred, though the word "continuous" may be omitted from the detail notes.

Masonry:
Bullnose Corners: Provide bullnose corners on outside corners. Typical at all interior masonry walls. Interior Masonry Hidden from View: Provide masonry units of same quality and color where hidden from view by objects that can change (e.g. cabinets, tackboards, whiteboards, etc.). Masonry above ceilings and hidden from view may, with the Architect's approval incorporate factory seconds and/or other colors provided structural integrity of the walls is not compromised.

Attachment to Steel Deck:
Do not use steel deck to support loads from plumbing, fire sprinklers, HVAC ducts, light fixtures, architectural elements or equipment of any kind, unless specifically noted otherwise.

Attachment to Open Web Steel Joists and Girders:
Joists and Girders may support plumbing, fire sprinkers, HVAC ducts, typical lightweight acoustic ceiling, and light fixtures only. All concentrated loads greater than 100 pounds and not meeting the requirements of the paragraph below shall be located within 6 inches of the joist or girder panel points or the joist or girder shall be reinforced with an additional web member. Refer to the general structural notes and the "typical detail at additional concentrated point load" on the structural drawings.

Concentrated point loads, single or multiple, totaling 100 pounds or less between panel points can be located at any point along the top or bottom chord of a joist or girder between adjacent panel points without meeting the requirements of the paragraph above, provided the loads are applied to the joist such that both angles of the bottom chord are equally loaded (i.e. no single beam clamps).

Joist bridging shall not be used to support hanging loads.

Bracing of miscellaneous items including mechanical, plumbing, conduit, architectural elements, etc. shall connect to the top chord of the joist or girder unless noted otherwise on the structural drawings.

Attachment to overbuilt studs/box headers for wood cenetered acoustic ceiling and gypsum board ceiling/clouds:
Bracing wire for seismic loads shall attach to the mid width of bottom flange of studs/box headers at locations where bridging/studs presented in perpendicular direction, unless noted otherwise.

BID ALTERNATE LIST

ALTERNATE 1: PALLET RACK SHELVING

BASE BID: PROVIDE PALLET RACK STATIC SHELVING AT WAREHOUSE B135 AS INDICATED ON DRAWINGS AND SPECIFICATIONS

ADD ALTERNATE: PROVIDE HIGH DENSITY PALLET RACK SHELVING AT WAREHOUSE B135, AS INDICATED ON DRAWINGS AND SPECIFICATIONS>

INDEX TO DRAWINGS -CONSTRUCTION DOCUMENTS

GENERAL
G000 COVER SHEET
G001 INDEX SHEET
G101 FIRST FLOOR LIFE SAFETY PLAN
G200 MOUNTING HEIGHTS & CLEARANCES
G201 MOUNTING HEIGHTS & CLEARANCES
G400 EXTERIOR WALL, FLOOR AND ROOF TYPES
G500 INTERIOR WALL TYPES
G501 INTERIOR WALL TYPES DETAILS

CIVIL
CV100 COVER SHEET
CV101 GENERAL NOTES
CD100 DEMOLITION PLAN
CS100 SITE PLAN
CS500 SITE DETAILS
CG100 GRADING PLAN
CU100 UTILITY PLAN

LANDSCAPE
AS101 ENLARGED SITE PLAN
AS501 SITE DETAILS
LI101 IRRIGATION PLAN
LI501 IRRIGATION DETAILS AND NOTES
LP101 PLANTING PLAN
LP501 PLANTING DETAILS AND NOTES

STRUCTURAL
SE001 GENERAL NOTES
SE002 GENERAL NOTES
SE003 LEGENDS & ABBREVIATIONS
SB101A FOOTING AND FOUNDATION PLAN-AREA A
SB101B FOOTING & FOUNDATION PLAN-AREA B
SB501 TYPICAL FOOTING & FOUNDATION DETAILS
SB502 TYPICAL FOOTING & FOUNDATION DETAILS
SB601 CONCRETE SCHEDULES
SB602 REINFORCING SCHEDULES
SB611 MASONRY SCHEDULES
SF101 OVERALL ROOF PLAN
SF101A ROOF FRAMING PLAN- AREA A
SF101B ROOF FRAMING PLAN-AREA B
SF201 STRUCTURAL ELEVATIONS
SF401 ENLARGED STRUCTURAL PLANS
SF501 TYPICAL ROOF FRAMING DETAILS
SF502 ROOF FRAMING DETAILS
SF503 ROOF FRAMING DETAILS
SF504 NEW WALL OPENINGS
SF505 EXTERIOR STEEL STUD DETAILS
SF601 TYPICAL STEEL FRAMING SCHEDULES
SF602 STEEL DECK SCHEDULES

ARCHITECTURAL
AD101A DEMOLITION PLAN - AREA A
AD101B DEMOLITION PLAN - AREA B
AD120 DEMOLITION ROOF PLAN
AD200 DEMOLITION - EXTERIOR ELEVATIONS
AD310 DEMOLITION WALL SECTIONS
AD311 DEMOLITION WALL SECTIONS
AD312 DEMOLITION WALL SECTIONS
AD313 DEMOLITION WALL SECTIONS
A100 REFERENCE PLAN
A101 FIRST FLOOR PLAN
A101A FIRST FLOOR PLAN - AREA A
A101B FIRST FLOOR PLAN - AREA B
A111 FIRST FLOOR SLAB EDGE PLAN
A120 ROOF PLAN
A200 EXTERIOR AXONOMETRICS
A201 EXTERIOR ELEVATIONS
A300 BUILDING SECTIONS
A310 WALL SECTIONS
A311 WALL SECTIONS
A312 WALL SECTIONS
A313 WALL SECTIONS
A314 WALL SECTIONS
A315 WALL SECTIONS
A316 ENTRY CANOPY
A317 ENTRY CANOPY
A318 ENTRY CANOPY
A319 ENTRY CANOPY
A330 ENVELOPE DETAILS
A331 ENVELOPE DETAILS
A332 ENVELOPE DETAILS
A333 ENVELOPE DETAILS
A335 SKYLIGHT DETAILS
A336 SKYLIGHT DETAILS
A340 ROOF DETAILS
A400 PARTIAL PLANS
A410 INTERIOR AXONOMETRIC
A411 INTERIOR ELEVATIONS
A412 INTERIOR ELEVATIONS
A413 INTERIOR ELEVATIONS
A414 INTERIOR ELEVATIONS
A430 CASEWORK DETAILS
A431 CASEWORK DETAILS
A432 CASEWORK DETAILS
A433 CASEWORK DETAILS
A434 CASEWORK DETAILS
A435 INTERIOR DETAILS
A450 PLAN DETAILS
A600 DOOR SCHEDULE
A610 DOOR DETAILS
A611 DOOR DETAILS
A620 WINDOW TYPES
A630 WINDOW DETAILS
A640A FINISH SCHEDULE AREA A
A640B FINISH SCHEDULE AREA B
A641 FINISH LEGEND
A651 FIRST FLOOR PATTERN PLAN
A651A FIRST FLOOR PATTERN PLAN - AREA A
A651B FIRST FLOOR PATTERN PLAN - AREA B
A652 FIRST FLOOR WALL PATTERN PLAN
A653 WALL PATTERN DETAILS
A701 REFLECTED CEILING PLAN
A701A FIRST FLOOR REFLECTED CEILING PLAN - AREA A
A701B FIRST FLOOR REFLECTED CEILING PLAN - AREA B
A710 CEILING DETAILS
A711 CEILING DETAILS
A800 SIGNAGE PLAN
A801 SIGNAGE SCHEDULE

MECHANICAL
MD101 FIRST FLOOR MECHANICAL DEMOLITION PLAN
M101A FIRST FLOOR MECHANICAL PLAN AREA A
M101B FIRST FLOOR MECHANICAL PLAN AREA B
M501 MECHANICAL SCHEDULES
M601 MECHANICAL DETAILS
M602 MECHANICAL DETAILS

PLUMBING
PD100 OVERALL ROOF DEMOLITION PLUMBING PLAN
PD101 OVERALL DEMOLITION PLUMBING PLAN
PD102 OVERALL DEMOLITION PLUMBING PLAN
P101A FIRST FLOOR PLUMBING PLAN AREA A
P101B FIRST FLOOR PLUMBING PLAN AREA B
P102A FIRST FLOOR PLUMBING PLAN AREA A
P102B FIRST FLOOR PLUMBING PLAN AREA B
P401 ENLARGED PLUMBING PLANS
P402 ENLARGED PLUMBING PLANS
P501 PLUMBING SCHEDULES & LEGENDS
P601 PLUMBING DETAILS
P602 PLUMBING DETAILS
P603 PLUMBING DETAILS

FIRE PROTECTION
FP101 OVERALL FIRE PROTECTION PLAN
FP601 FIRE PROTECTION LEGENDS & DETAILS

ELECTRICAL
E001 ELECTRICAL SYMBOLS, SCHEDULES, AND NOTES
E002 ELECTRICAL SCHEDULES AND NOTES
E101 ELECTRICAL SITE PLAN
E211A FIRST FLOOR LIGHTING PLAN AREA A
E211B FIRST FLOOR LIGHTING PLAN AREA B
E311A FIRST FLOOR POWER PLAN - AREA A
E311B FIRST FLOOR POWER PLAN - AREA B
E312 ROOF POWER PLAN
E360 ONE-LINE DIAGRAM
E370 PANELBOARD SCHEDULES
E371 PANELBOARD SCHEDULES
E372 PANEL BOARD SCHEDULES
E411A FIRST FLOOR SYSTEM PLAN - AREA A
E411B FIRST FLOOR SYSTEM PLAN -AREA B
E501 ELECTRICAL DIAGRAMS
E502 ELECTRICAL DIAGRAMS
E503 ELECTRICAL DIAGRAMS
E504 ELECTRICAL DIAGRAMS
E505 ELECTRICAL DIAGRAMS
T001 AUDIOVISUAL SYMBOLS AND NOTES
T002 AUDIOVISUAL SCHEDULES AND NOTES
T222 FIRST FLOOR AUDIOVISUAL PLAN AREA - A
T223 FIRST FLOOR AUDIOVISUAL PLAN AREA - B
T224 FIRST FLOOR AUDIOVISUAL RCP AREA - A
T225 FIRST FLOOR AUDIOVISUAL RCP AREA - B
T311 LEVEL 1 INTERCOM OVERALL
T501 AUDIOVISUAL ELEVATIONS
T700 AUDIOVISUAL DIAGRAMS
T701 AUDIOVISUAL DIAGRAMS
T702 AUDIOVISUAL DIAGRAMS

MHTN ARCHITECTS
MHTN Architects, Inc.
280 South 400 West
Suite 250
Salt Lake City, Utah 84101
Telephone (801) 595-6700
www.mhtn.com

JORDAN SCHOOL DISTRICT
JORDAN LEARNING CENTER
3706 WEST 9800 SOUTH
SOUTH JORDAN, UT 84009

©2023 MHTN ARCHITECTS, INC.
Confidentiality Notice:
This document is intended for use on the Project identified herein by individuals and companies involved in the design, permitting, bidding and construction of the Project. MHTN Architects, Inc. grants permission to distribute and reproduce this document for these purposes only. Distribution, printing or copying this document for purposes other than those indicated is strictly prohibited. If a digital copy of this document is received in error, please delete it.

SEAL:

STATE OF UTAH
CLIFFORD HOWARD CURTIS
No. 7394786-0301
24 AUGUST 2024
LICENSED ARCHITECT

MHTN PROJECT NO.2024528

VIEW AND PRINT THIS DRAWING IN COLOR
Original drawing is 30 x 42. Do not scale contents of this drawing.

ISSUED

NO.	DATE	DESCRIPTION

REVISIONS
CONTRACTOR TO VERIFY DRAWINGS IN FIELD USE REFLECT LAST REVISION DATE.

NO.	DATE	DESCRIPTION

ISSUE
CONSTRUCTION DOCUMENTS
AUGUST 29, 2024

SHEET NAME
INDEX SHEET

SHEET NUMBER
G001

AREA FUNCTION (IBC TABLE 1004.1.2)

ASSEMBLY, UNCON | CIRCULATION | STORAGE
BUSINESS | ED, CLASSROOM | MECH
BUSINESS, CON | ED, SHOPS | WAREHOUSE

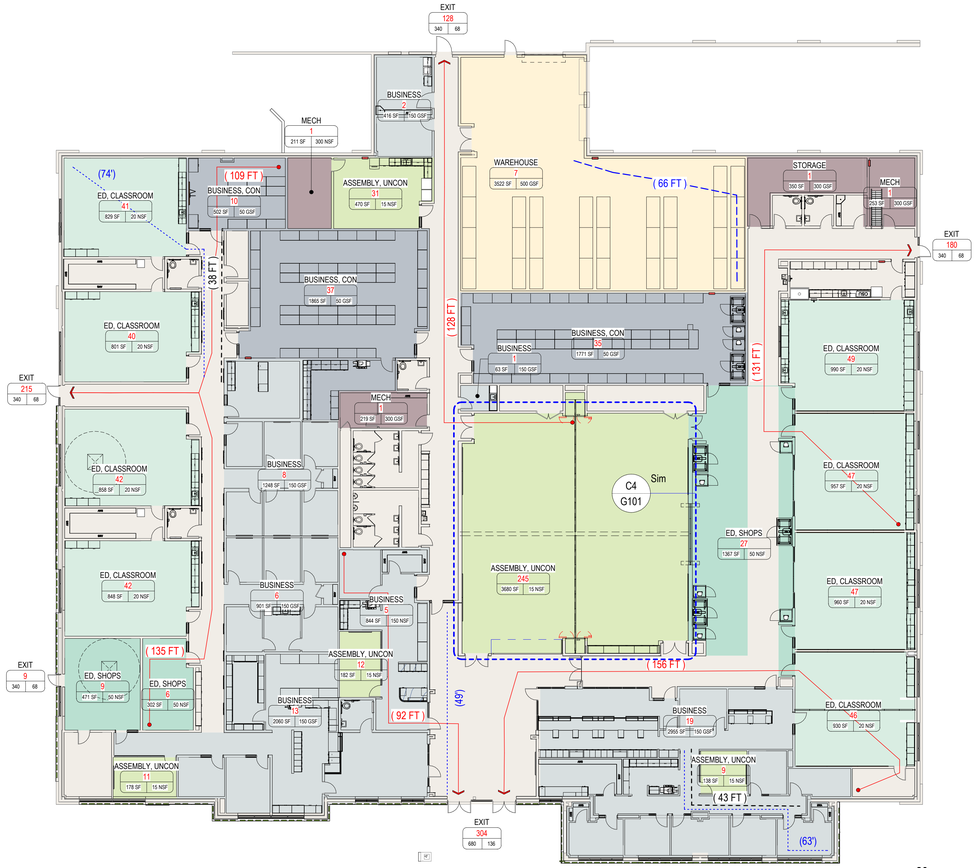

FIRST FLOOR LIFE SAFETY PLAN

SCALE: 1/16" = 1'-0"

0 8' - 0" 16' - 0" 32' - 0"

N

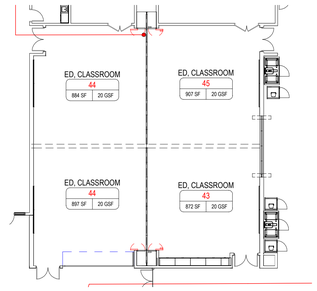

C4 MULTIPURPOSE ROOM LS PLAN - DIVIDED

SCALE: 1/16" = 1'-0"

LIFE SAFETY PLAN GENERAL NOTES

References to sheets below are provided to aid in navigating the drawings.

RE: G500 for Interior Wall Types which indicate ratings, reference termination details, and require rated wall identification.

RE: G300 for Fire Penetration Details

RE: G310 for UL, GA, and/or IBC reference numbers for rated assemblies

RE: G400 for floor/ceiling and roof/ceiling rated assemblies

RE: A600 for the Door Schedule and door ratings.

RE: A620 for Window Types and window ratings.

Exit Width Capacity: Exit width capacities are based on 0.3" per occupant at stairways and 0.2" per occupant at other means of egress components.

LEGEND - LIFE SAFETY

AREA USE / A-3 / 21 / 150 SF / 7 NSF — OCCUPANCY GROUP; OCCUPANT LOAD; OCCUPANT LOAD FACTOR GROSS: GSF NET: NSF; SQUARE FOOTAGE

EXIT / 183 / 305 / 61" — EXIT LOAD; EXIT WIDTH PROVIDED; EXIT CAPACITY

(75 FT) COMMON PATH OF EGRESS TRAVEL

(75 FT) TRAVEL DISTANCE

(20 FT) DEAD END

FIRE BARRIER - 1 HOUR

BUILDING 1	
OCCUPANCY GROUP	E
ALLOWABLE AREA BY FLOOR	58,000
ALLOWABLE NUMBER OF STORIES	3
LEVEL 1 - AREA	40,901
TOTAL AREA	40,901
LEVEL 1 OCCUPANT LOAD	
LEVEL 1 EXIT CAPACITY	

Allowable Building Area Calculation

Single-Occupancy, Multi-Story
At = 58,000 SF

PLUMBING FIXTURES	
TOTAL BUILDING AREA:	40,901 SF
TOTAL BUILDING OCCUPANT LOAD:	836 OCC.
ANTICIPATED BUILDING POPULATION:	400 OCC.
WATER CLOSETS (1 PER 50)	
REQUIRED:	8
PROVIDED:	13
LAVATORIES (1 PER 50)	
REQUIRED:	8
PROVIDED:	11
DRINKING FOUNTAINS (1 PER 100)	
REQUIRED:	4
PROVIDED:	4

MHTN ARCHITECTS
MHTN Architects, Inc.
280 South 400 West
Suite 250
Salt Lake City, Utah 84101
Telephone (801) 595-6700
www.mhtn.com

JORDAN SCHOOL DISTRICT

JORDAN LEARNING CENTER

3706 WEST 9800 SOUTH
SOUTH JORDAN, UT 84009

©2023 MHTN ARCHITECTS, INC.

Confidentiality Notice:
This document is intended for use on the Project identified herein by individuals who are professionally involved in the design, permitting, bidding and construction of the Project. MHTN Architects, Inc. grants limited rights to distribute and reproduce this document for this express purpose only. Distribution, printing or copying this document for purposes other than those indicated is strictly prohibited. If a digital copy of this document is received in error, please delete it.

SEAL

STATE OF UTAH — CLIFFORD HOWARD CURTIS — No. 7394786-0301 — 24 AUGUST 2024 — LICENSED ARCHITECT

MHTN PROJECT NO. 2024528

Original drawing is 30 x 42. Do not scale contents of this drawing.

REVISIONS
CONTRACTOR TO VERIFY DRAWINGS IN FIELD USE REFLECT LAST REVISION DATE.

NO.	DATE	DESCRIPTION

ISSUE
CONSTRUCTION DOCUMENTS
AUGUST 29, 2024

SHEET NAME
FIRST FLOOR LIFE SAFETY PLAN

SHEET NUMBER
G101

Autodesk Docs://2024528 JSD Retail Remodel/A24 2024528 JSD Retail Remodel.rvt
8/28/2024 8:28:13 AM

MOUNTING HEIGHTS & CLEARANCES GENERAL NOTES

Diagrams on this sheet incorporate the ADA Standard, 2010 edition and ICC/ANSI A117.1, 2009 edition requirements for accessibility. The most restrictive requirement is shown where the two standards differ.

The purpose of this sheet is to provide general clearance, size and mounting height dimensions. If other drawings provide different information, that doesn't violate the accessibility standards, that information shall govern, however, nothing shown herein shall supersede the requirement of the standards listed above, nor of the IBC.

Prior to installation, coordinate toilet and bath accessory mounting heights with manufacturer's recommended heights and adjust as required to comply with ADA & ANSI requirements.

Where the accessibility standards indicate ranges of dimensions, or minimum or maximum dimensions, the dimensions on this sheet have been modified to indicate the preferred or the most restrictive of the dimensions. Where it is impractical to comply with a dimension, the dimension may be adjusted after review with the Architect and, provided the proposed change does not violate the accessibility standards.

Dimensions shown herein indicate face of wall, floor, ceiling and other building elements.

C1 ACCESSIBLE STALL PLAN

SCALE: 1/2" = 1'-0"

C2 ACCESSIBLE STALL @ IN-SWING

SCALE: 1/2" = 1'-0"

C3 ACCESSIBLE STALL PLAN @ WALLS

SCALE: 1/2" = 1'-0"

C4 STALL PLAN @ WALLS, IN-SWING

SCALE: 1/2" = 1'-0"

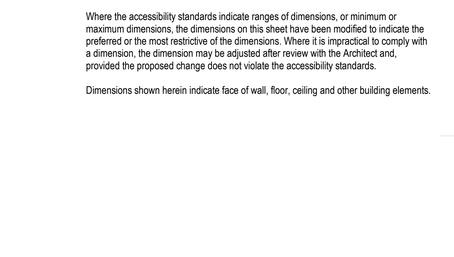

C5 ACCESSIBLE STALL MTG HEIGHTS

SCALE: 1/2" = 1'-0"

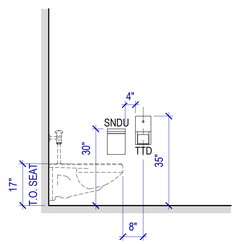

D5 NON-ACC STALL MTG HEIGHTS

SCALE: 1/2" = 1'-0"

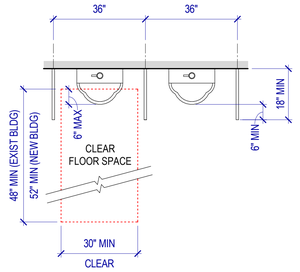

B3 URINAL PLAN

SCALE: 1/2" = 1'-0"

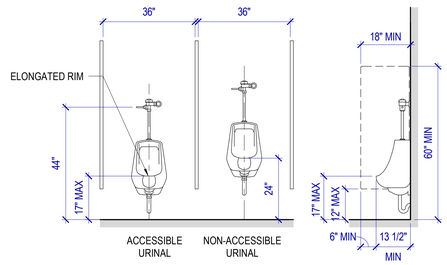

B4 URINAL MOUNTING HEIGHTS

SCALE: 1/2" = 1'-0"

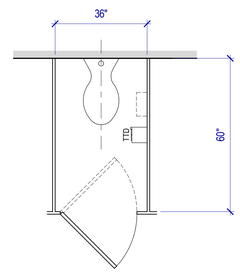

D2 NON-ACCESSIBLE STALL PLAN

SCALE: 1/2" = 1'-0"

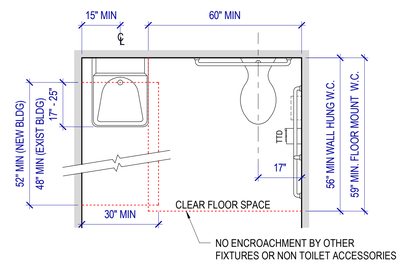

E5 TOILET ROOM PLAN

SCALE: 1/2" = 1'-0"

MHTN ARCHITECTS

MHTN Architects, Inc.
280 South 400 West
Suite 250
Salt Lake City, Utah 84101
Telephone (801) 595-6700
www.mhtn.com

JORDAN SCHOOL DISTRICT

JORDAN LEARNING CENTER

3706 WEST 9800 SOUTH
SOUTH JORDAN, UT 84009

©2023 MHTN ARCHITECTS, INC.

Confidentiality Notice
This document is intended for use on the Project identified herein by individuals and companies involved in the design, permitting, bidding and construction of the Project. MHTN Architects, Inc. grants limited rights to distribute and reproduce this document for purposes of the Project only. Any other copying or reproduction of this document for purposes other than those indicated is strictly prohibited. If a digital copy of this document is received in error, please delete it.

SEAL

STATE OF UTAH
CLIFFORD HOWARD CURTIS
No. 7394786-0301
2/4 AUGUST 2024
LICENSED ARCHITECT

MHTN PROJECT NO. 2024528

Original drawing is 30 x 42. Do not scale contents of this drawing.

REVISIONS
CONTRACTOR TO VERIFY DRAWINGS IN FIELD USE REFLECT LAST REVISION DATE.

NO.△	DATE	DESCRIPTION

ISSUE
CONSTRUCTION DOCUMENTS
AUGUST 29, 2024

SHEET NAME
MOUNTING HEIGHTS & CLEARANCES

SHEET NUMBER
G200

Autodesk Docs://2024528 JSD Retail Remodel/A24 2024528 JSD Retail Remodel.rvt
8/29/2024 8:28:14 AM

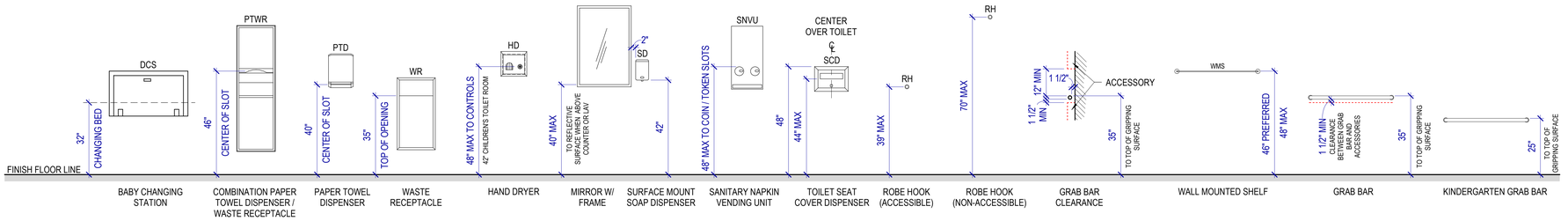

A1 TOILET ROOM EQUIPMENT

SCALE: 1/2" = 1'-0" G201

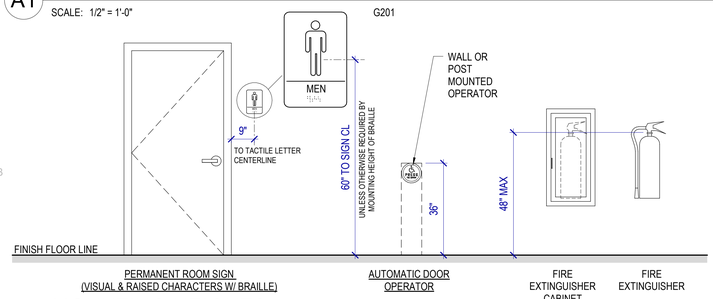

B1 MOUNTING HEIGHTS

SCALE: 1/2" = 1'-0" G201

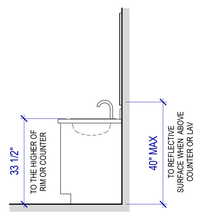

C1 ACCESSIBLE PARALLEL SINK

SCALE: 1/2" = 1'-0"

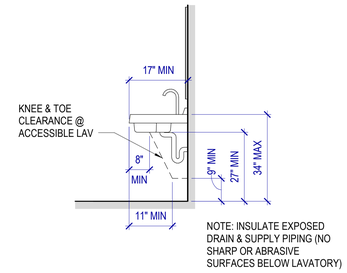

NOTE: INSULATE EXPOSED DRAIN & SUPPLY PIPING (NO SHARP OR ABRASIVE SURFACES BELOW LAVATORY)

C2 LAVATORY MOUNTING HEIGHT

SCALE: 1/2" = 1'-0"

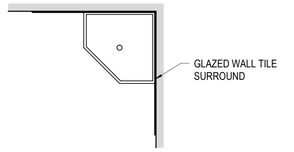

PLAN VIEW

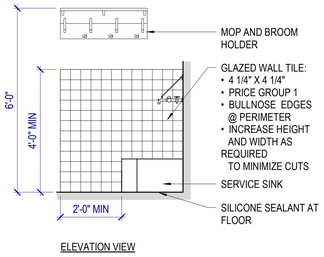

ELEVATION VIEW

C4 SERVICE SINK

SCALE: 1/2" = 1'-0"

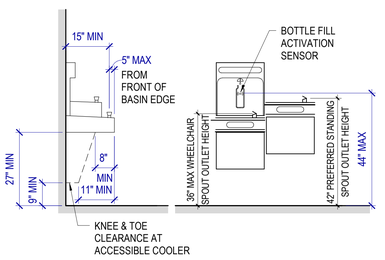

D4 DRINKING FOUNTAIN DETAILS

SCALE: 1/2" = 1'-0"

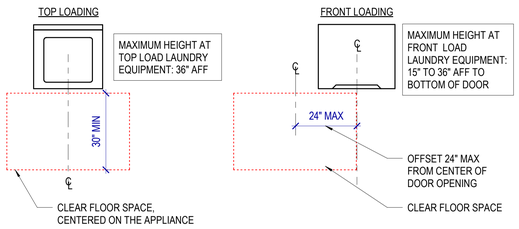

E4 CLEAR FLOOR SPACE @ LAUNDRY

SCALE: 1/2" = 1'-0"

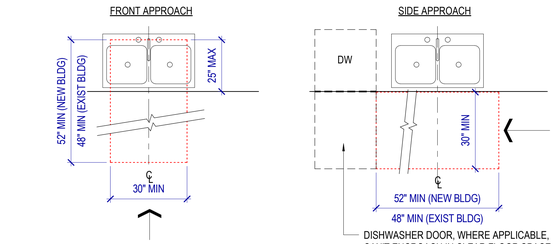

B5 SINK APPROACHES AND CLEARANCE

SCALE: 1/2" = 1'-0"

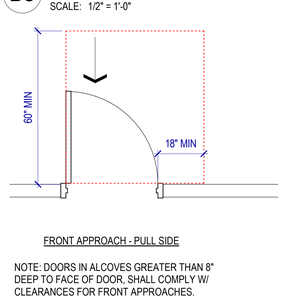

FRONT APPROACH - PULL SIDE

NOTE: DOORS IN ALCOVES GREATER THAN 8" DEEP TO FACE OF DOOR, SHALL COMPLY W/ CLEARANCES FOR FRONT APPROACHES.

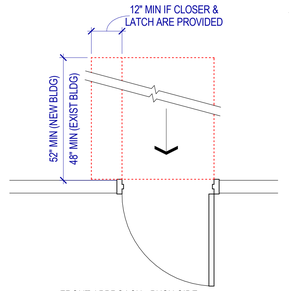

FRONT APPROACH - PUSH SIDE

C5 FRONT APPROACHES @ SWINGING DOORS

SCALE: 1/2" = 1'-0"

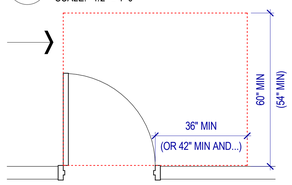

HINGE APPROACH - PULL SIDE

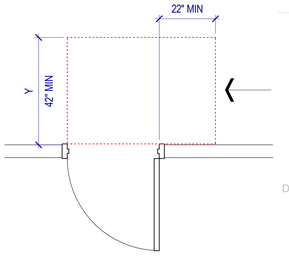

HINGE APPROACH - PUSH SIDE

Y = 48" MIN IF BOTH CLOSER AND LATCH ARE PROVIDED.

D5 HINGE SIDE APPROACHES @ SWINGING DOORS

SCALE: 1/2" = 1'-0"

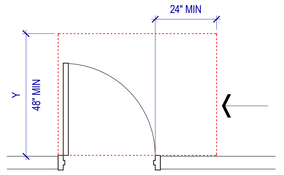

NOTE: Y = 54" MIN IF CLOSER IS PROVIDED.

LATCH APPROACH - PULL SIDE

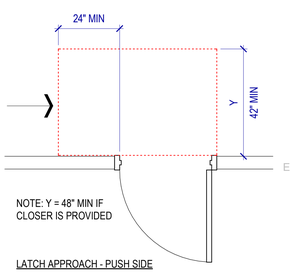

NOTE: Y = 48" MIN IF CLOSER IS PROVIDED

LATCH APPROACH - PUSH SIDE

E5 MANEUVERING CLEARANCES @ MANUAL DOORS

SCALE: 1/2" = 1'-0"

MOUNTING HEIGHTS & CLEARANCES GENERAL NOTES

Diagrams on this sheet incorporate the ADA Standard, 2010 edition and ICC/ANSI A117.1, 2009 edition requirements for accessibility. The most restrictive requirement is shown where the two standards differ.

The purpose of this sheet is to provide general clearance, size and mounting height dimensions. If other drawings provide different information, that doesn't violate the accessibility standards, that information shall govern, however, nothing shown herein shall supersede the requirement of the standards listed above, nor of the IBC.

Prior to installation, coordinate toilet and bath accessory mounting heights with manufacturer's recommended heights and adjust as required to comply with ADA & ANSI requirements.

Where the accessibility standards indicate ranges of dimensions, or minimum or maximum dimensions, the dimensions on this sheet have been modified to indicate the preferred or the most restrictive of the dimensions. Where it is impractical to comply with a dimension, the dimension may be adjusted after review with the Architect and, provided the proposed change does not violate the accessibility standards.

Dimensions shown herein indicate face of wall, floor, ceiling and other building elements.

MHTN ARCHITECTS
MHTN Architects, Inc.
280 South 400 West
Suite 250
Salt Lake City, Utah 84101
Telephone (801) 595-6700
www.mhtn.com

JORDAN SCHOOL DISTRICT

JORDAN LEARNING CENTER

3706 WEST 9800 SOUTH
SOUTH JORDAN, UT 84095

©2023 MHTN ARCHITECTS, INC.
Confidentiality Notice:
This document is intended for use on the Project identified herein by individuals and companies involved in the design, permitting, bidding and construction of the Project. MHTN Architects, Inc. grants limited rights to distribute and reproduce this document for this express purpose only. Distribution, printing or copying this document for purposes other than those indicated is strictly prohibited. If a digital copy of this document is received in error, please delete it.

SEAL

STATE OF UTAH
CLIFFORD HOWARD CURTIS
No. 7394786-0301
24 AUGUST 2024
LICENSED ARCHITECT

MHTN PROJECT NO. 2024528

Original drawing is 30 x 42. Do not scale contents of this drawing.

REVISIONS
CONTRACTOR TO VERIFY DRAWINGS IN FIELD USE REFLECT LAST REVISION DATE.

NO.	DATE	DESCRIPTION

ISSUE
CONSTRUCTION DOCUMENTS
AUGUST 29, 2024

SHEET NAME
MOUNTING HEIGHTS & CLEARANCES

SHEET NUMBER
G201

Autodesk Docs://2024528 JSD Retail Remodel/A24 2024528 JSD Retail Remodel.rvt
8/28/2024 8:28:15 AM

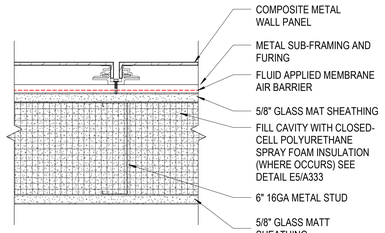

E4D WALL TYPE E4D

SCALE: 3" = 1'-0"

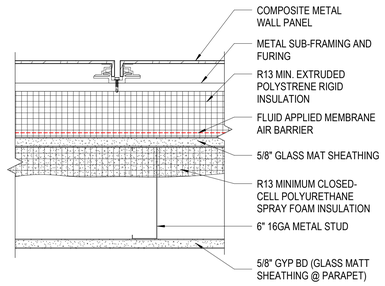

E4C WALL TYPE E4C

SCALE: 3" = 1'-0"

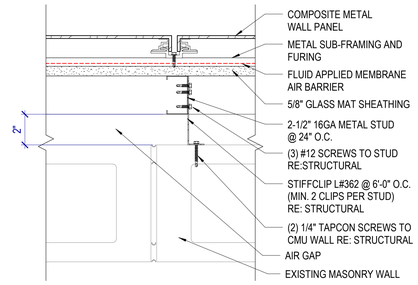

E4B WALL TYPE E4B

SCALE: 3" = 1'-0"

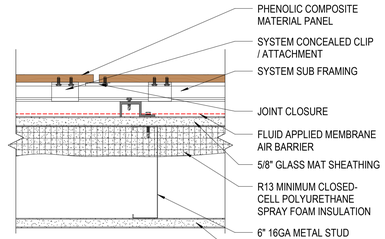

E3F WALL TYPE E3F

SCALE: 3" = 1'-0"

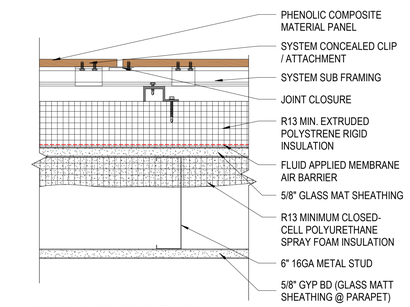

E3D WALL TYPE E3D

SCALE: 3" = 1'-0"

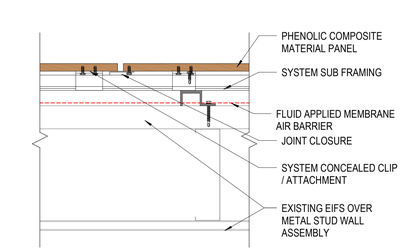

E3C WALL TYPE E3C

SCALE: 3" = 1'-0"

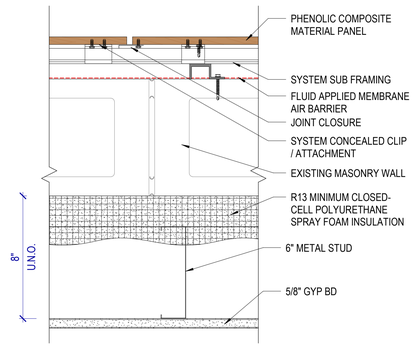

E3B WALL TYPE E3B

SCALE: 3" = 1'-0"

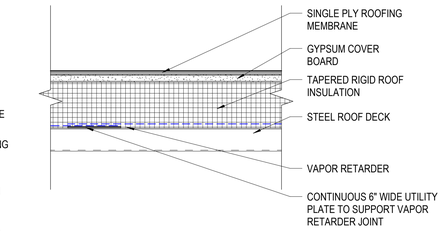

R2 ROOF TYPE R2

SCALE: 3" = 1'-0"

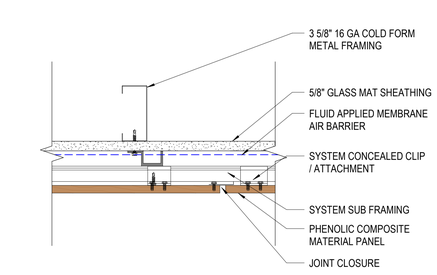

S2 SOFFIT TYPE S2

SCALE: 3" = 1'-0"

E3B WALL TYPE E3B

SCALE: 3" = 1'-0"

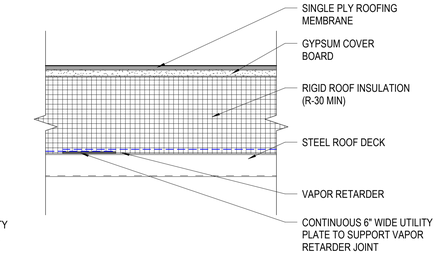

R1 ROOF TYPE R1

SCALE: 3" = 1'-0"

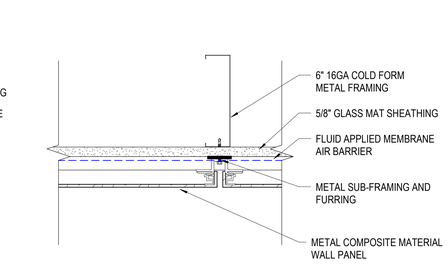

S1 SOFFIT TYPE S1

SCALE: 3" = 1'-0"

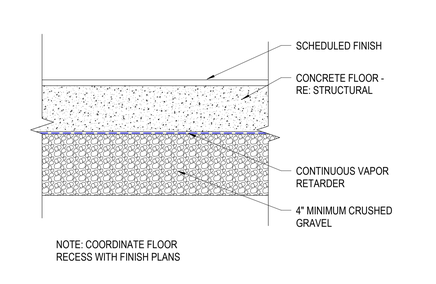

NOTE: COORDINATE FLOOR RECESS WITH FINISH PLANS

F1 FLOOR TYPE F1

SCALE: 3" = 1'-0"

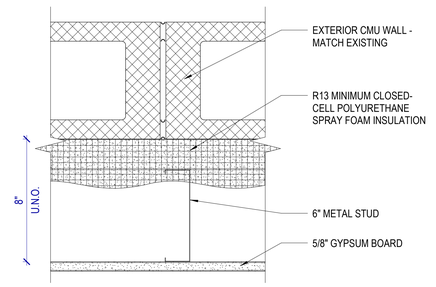

E1B WALL TYPE E1B

SCALE: 3" = 1'-0"

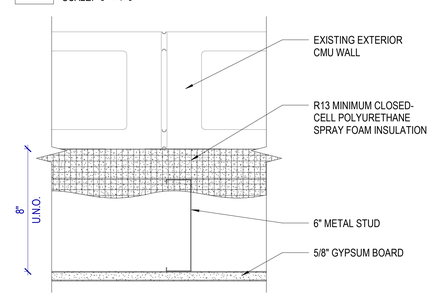

E1 WALL TYPE E1

SCALE: 3" = 1'-0"

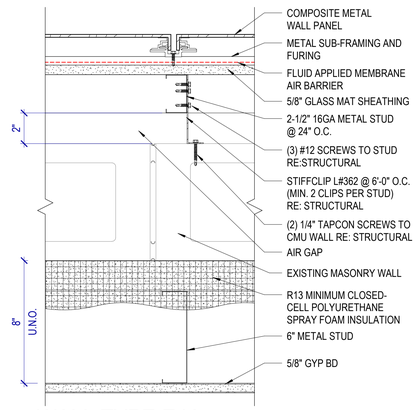

E4A WALL TYPE E4A

SCALE: 3" = 1'-0"

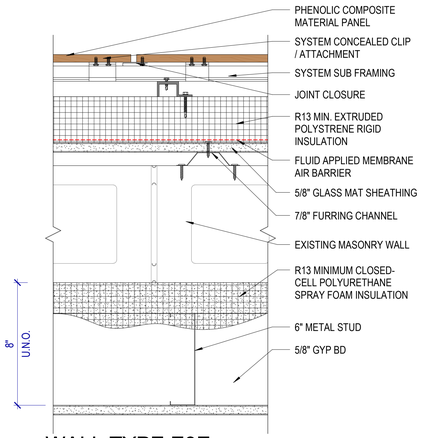

E3E WALL TYPE E3E

SCALE: 3" = 1'-0"

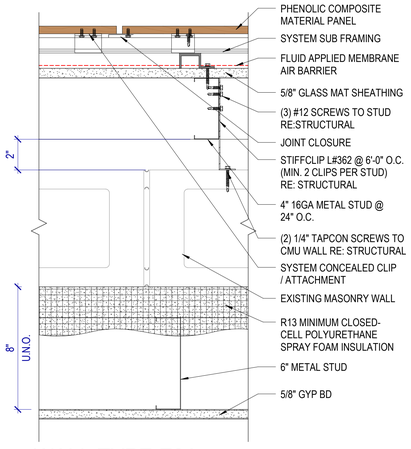

E3A WALL TYPE E3A

SCALE: 3" = 1'-0"

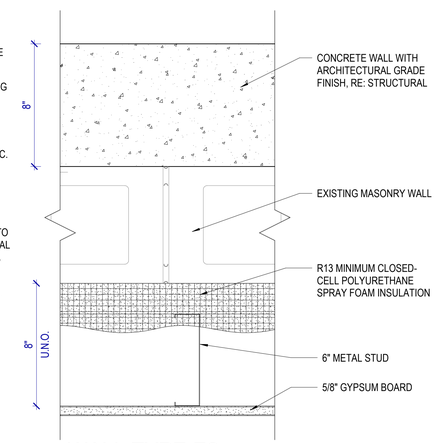

E2 WALL TYPE E2

SCALE: 3" = 1'-0"

MHTN ARCHITECTS
MHTN Architects, Inc.
280 South 400 West
Suite 250
Salt Lake City, Utah 84101
Telephone (801) 595-6700
www.mhtn.com

JORDAN SCHOOL DISTRICT

JORDAN LEARNING CENTER

3706 WEST 9800 SOUTH
SOUTH JORDAN, UT 84009

©2023 MHTN ARCHITECTS, INC.

Confidentiality Notice:
This document is intended for use on the Project identified herein by individuals and companies involved in the design, permitting, bidding and construction of the Project. MHTN Architects, Inc. grants limited rights to distribute and reproduce this document for this express purpose only. Distribution, printing or copying this document for purposes other than those indicated is strictly prohibited. If a digital copy of this document is received in error, please delete it.

SEAL

STATE OF UTAH
CLIFFORD HOWARD CURTIS
No. 7394786-0301
24 AUGUST 2024
LICENSED ARCHITECT

MHTN PROJECT NO. 2024528

Original drawing is 30 x 42. Do not scale contents of this drawing.

REVISIONS
CONTRACTOR TO VERIFY DRAWINGS IN FIELD USE REFLECT LAST REVISION DATE.

NO.	DATE	DESCRIPTION

ISSUE
CONSTRUCTION DOCUMENTS
AUGUST 29, 2024

SHEET NAME
EXTERIOR WALL, FLOOR AND ROOF TYPES

SHEET NUMBER
G400

Autodesk Docs://2024528 JSD Retail Remodel/A24 2024528 JSD Retail Remodel.rvt
8/28/2024 8:28:17 AM

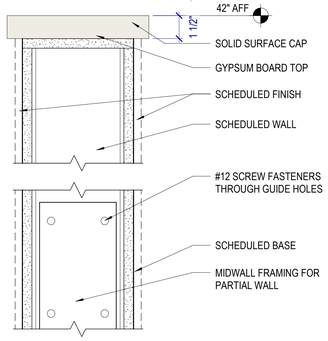

A1 WALL BASE DETAIL

SCALE: 3" = 1'-0"

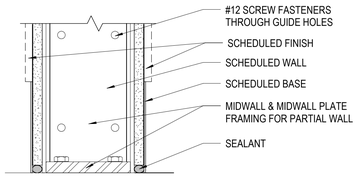

NOTE: PROVIDE 'MIDWALL 48' SUPPORT BRACKETS AT 32" OC, WITH TWO (2) ADJACENT SUPPORTS AT THE END OF EACH PARTIAL HEIGHT WALL. USE 'MIDWALL 48' AT PARTIAL HEIGHT WALLS THAT ARE 4'-0" OR TALLER.

B1 WALL BASE DETAIL

SCALE: 3" = 1'-0"

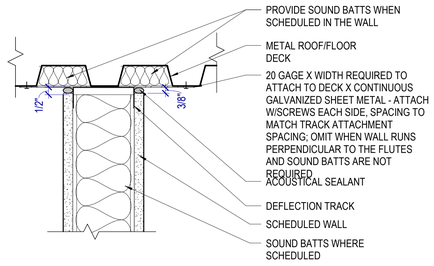

C1 NON-RATED WALL HEAD DETAIL

SCALE: 3" = 1'-0"

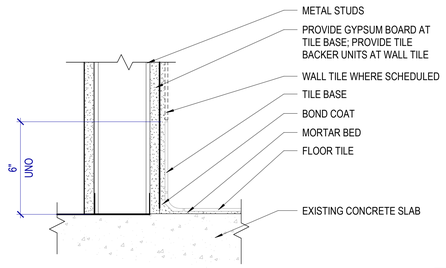

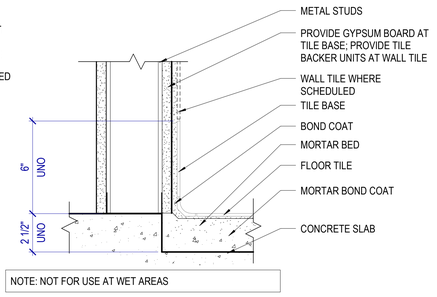

NOTE: NOT FOR USE AT WET AREAS

D1 FLOOR & BASE W/ TILED WALL

SCALE: 3" = 1'-0"

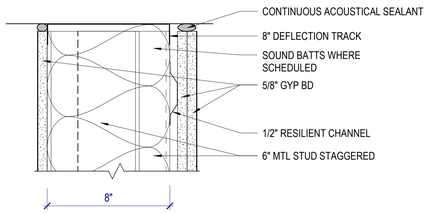

D3 WALL HEAD DETAIL

SCALE: 3" = 1'-0"

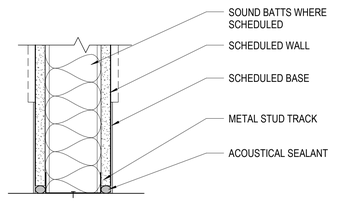

E1 WALL BASE DETAIL

SCALE: 3" = 1'-0"

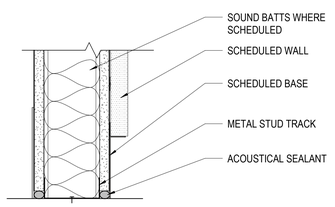

E2 WALL BASE DETAIL

SCALE: 3" = 1'-0"

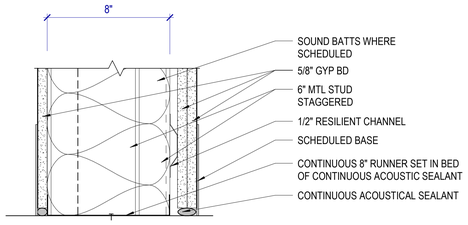

E3 WALL BASE DETAIL

SCALE: 3" = 1'-0"

INTERIOR WALL TYPE SCHEDULE

TAG	CONSTRUCTION						FIRE RESISTANCE		ACOUSTICAL	
MARK	DESCRIPTION	WIDTH	TERMINATION	LIMITING HEIGHT	HEAD DETAIL	BASE DETAIL	FIRE RATING	STANDARD	SOUND BATT	STC
M8B	8" CMU	7 5/8"	TO DECK							
S2AX	5/8" GB + 2 1/2" MTL STUD	3 1/8"	TO DECK	12'-0"	C1/G500	E1/G500			Yes	40
S3A	5/8" GB + 3 5/8" MTL STUD + 5/8" GB	4 7/8"	TO DECK	20'-5"	C1/G500	E1/G500			Yes	40
S3AT	TILE + 5/8" GTB + 3-5/8" MTL STUD + 5/8" GB	5 1/2"	TO DECK	20'-5"	C1/G500	D1/G500			Yes	41
S3AX	5/8" GB + 3 5/8" MTL STUD	4 1/4"	TO DECK	20'-5"	C1/G500	E1/G500			Yes	40
S3AXT	TILE + 5/8" GB + 3 5/8" MTL STUD	5"	TO DECK	20'-5"	C1/G500	D1/G500			Yes	40
S3B	5/8" GB + 3 5/8" MTL STUD + 5/8" GB	4 7/8"	TO DECK	20'-5"	C1/G500	E1/G500			No	
S3BX	5/8" GB + 3 5/8" MTL STUD	4 1/4"	TO DECK	16'-2"	C1/G500	E1/G500			No	
S3BXF	FORMED MDF PANEL + Z-CLIPS + 5/8" GB + 3-5/8" MTL STUD	5 3/8"	TO DECK	20'-5"	C1/G500	E2/G500			Yes	40
S6A	5/8" GB + 6" MTL STUD + 5/8" GB	7 1/4"	TO DECK	25'-1"	C1/G500	E1/G500			Yes	41
S6AF	FORMED MDF PANEL + Z-CLIP + 5/8" GB + 6" MTL STUD + 5/8" GB	8 3/8"	TO DECK	25'-1"	C1/G500	E2/G500			Yes	41
S6AG	5/8" GB(2) + 1/2" RESILIENT CHANNEL + 6" MTL STUD(STAGGERED IN 8" SPACE) + 5/8" GB	10 3/8"	TO DECK	24'-6"	D3/G500	E3/G500			Yes	65
S6AL	PLAM + 5/8" GB + 6" MTL STUD + 5/8" GB	8"	TO DECK	25'-1"	C1/G500	E1/G500			Yes	41
S6AT	TILE + 5/8" GTB + 6" MTL STUD + 5/8" GB	7 3/4"	TO DECK	25'-1"	C1/G500	D1/G500			Yes	41
S6ATT	5/8" GB + 6" MTL STUD + 5/8" GB	8 1/4"	TO DECK	25'-1"	C1/G500	E1/G500			Yes	41
S6ATT	TILE + 5/8" GTB + 6" MTL STUD + 5/8" GB	8 1/4"	TO DECK	25'-1"	C1/G500	D1/G500			Yes	41
S6ATT	TILE + 5/8" GTB + 6" MTL STUD + 5/8" GTB + TILE	8 1/4"	TO DECK	25'-1"	C1/G500	D1/G500			Yes	41
S6ATW	TILE + 5/8" GTB + 6" MTL STUD + 5/8" GB + PLYWOOD	8 1/2"	TO DECK	25'-1"	C1/G500	D1/G500			Yes	41
S6ATX	TILE + 5/8" GTB + 6" MTL STUD	7 1/4"	TO DECK	25'-1"	D1/G500 SIM	C2/G500 SIM			Yes	41
S6AW	PLYWOOD + 5/8" GB + 6" MTL STUD + 5/8" GB	8"	TO DECK	25'-1"	C1/G500	E1/G500			Yes	41
S6AX	5/8" GB + 6" MTL STUD	6 5/8"	TO DECK	24'-1"	C1/G500	E1/G500			Yes	41
S6AXT	TILE + 5/8" GTB + 6" MTL STUD + 5/8" GB	7 1/8"	TO DECK	25'-1"	C1/G500	D1/G500			Yes	41
S6B	5/8" GB + 6" MTL STUD + 5/8" GB	7 1/4"	TO DECK	25'-1"	C1/G500	E1/G500			No	
S6BT	TILE + 5/8" GTB + 6" MTL STUD + 5/8" GB	7 3/4"	TO DECK	25'-1"	C1/G500	D1/G500			No	
S6BTT	TILE + 5/8" GTB + 6" MTL STUD + 5/8" GTB + TILE	8 3/4"	TO DECK	25'-1"	C1/G500	E1/G500			No	
S6P	5/8" GB + 6" MTL STUD + 5/8" GB	7 1/4"	TO DECK	4'-0"	A1/G500	B1/G500			No	
S10A	5/8" GB + 10" MTL STUD + 5/8" GB	11 1/4"	TO DECK	25'-1"	C1/G500	E1/G500			Yes	41
S10AL	PLAM + 5/8" GB + 10" MTL STUD + 5/8" GB	1'-0"	TO DECK	25'-1"	C1/G500	E1/G500			Yes	41
S10AT	TILE + 5/8" GTB + 10" MTL STUD + 5/8" GB	11 1/4"	TO DECK	25'-1"	C1/G500	E1/G500			Yes	41
S10ATL	TILE + 5/8" GB + 10" MTL STUD + 5/8" GB + PLAM	1'-0 3/4"	TO DECK	25'-1"	C1/G500	E1/G500			Yes	41

INTERIOR WALL TYPE GENERAL NOTES

RE: G500 for wall termination details which occur at metal deck/structure or at base of wall.

Continuity:
Wall type designations imply that the walls are continuous, typically from corner to corner and until another wall type is indicated. At the intersection of walls of dissimilar sound and/or fire-resistance ratings, the wall with the more restrictive requirements shall continue through, uninterrupted and shall take precedence.

Typical Interior Wall Type: S6A, UNO.

Glass-mat Tile Backing Board:
Where stud walls with tile finishes are scheduled, provide glass-mat tile backing board for the full height and width of the tile. Balance of wall to be gypsum board, UNO.

Water-resistant Gypsum Board:
Provide water-resistant gypsum board at walls in wet areas with non-tile finishes.

Acoustical Sealant:
At metal stud walls with an STC rating, provide acoustical sealant at top and bottom tracks.

Sound Attenuation Batts:
Where indicated, provide sound attenuation batts sized to fit snuggly in the wall cavity. Fill all voids in the wall, from floor to deck, including at wall intersections to prevent sound leakage into adjacent rooms.

Metal Stud Partitions:
Extend interior walls and partitions from floor to roof deck or floor deck above, unless noted otherwise.
The specifications indicate a minimum metal stud gauge; increase the gauge above the minimum as required by the metal stud manufacturer for actual wall heights, deflection criteria and code required horizontal load.

See sheet A501 for stud framing requirements aroung partition opening.

Design requirements for metal stud walls: 5 PSF lateral load; L/240 deflection.
Stud Spacing:
Stud size great than or equal to 6" shall be 16" on center, unless noted otherwise.
Stud size less than 6" shall be 12" on center, unless noted otherwise.

Provide bracing at 48" OC maximum at non-composite walls (walls that don't have gypsum board full height on each side of the stud).

Provide control joints at 30'-0" OC maximum. If not shown, coordinate location with Architect.

Rated Wall Identification:
Provide 3" high block letters (with 3/8" minimum stroke), stencil the fire resistance rating on the wall at 30' maximum intervals, measured horizontally and within 15' of the end of the wall. Provide one (1) label minimum per wall.
Locate identification in accessible concealed floor areas, if any and in the accessible space between ceiling and structure above.

Wall Schedule Abbreviations
CMU - Concrete Masonry Unit
GB - Gypsum Board
GTB - Glass-mat Tile Backing Board
IGB - Impact-resistant Gypsum Board

WALL TYPE TAG DESCRIPTION

Core Material:
S - Metal Stud
H - Metal CH Stud
M - Concrete Masonry (CMU)
B - Structural Clay Brick
C - Concrete
W - Wood

Core Thickness:
Metal Studs:
Number indicates metal stud thickness, rounded down where applicable
0 - 7/8"
1 - 1 5/8"
2 - 2 1/2"
3 - 3 5/8"
4 - 4"
6 - 6"
8 - 8"

Brick and CMU:
Number indicates nominal thickness
4 - 3 5/8"
6 - 5 5/8"
8 - 7 5/8"
0 - 9 5/8"
2 - 11 5/8"

Concrete:
Number corresponds to thickness in whole inches
8 - 8"
0 - 10"
2 - 12"

Rating:
Number indicates the fire-resistive rating in hours. Unrated walls have no designation.

Height and STC:
A - Wall is continuous to the structural deck above and includes sound batt
B - Wall is continuous to the structural deck above with no sound batt
C - Wall extends to 6" above the ceiling and includes sound batt
D - Wall extends to 6" above the ceiling with no sound batt
E - Wall extends to finished ceiling and includes sound batt
F - Wall extends to finished ceiling with no sound batt
P - Wall is partial height - RE: Floor Plan for top of wall

Qualifiers:
H - CMU with honed face finish
S - CMU with split face finish

Asymmetric Modifiers:
X - Single side gypsum board
T - Glass-mat tile backing board with tile finish
L - Plam panel finish
F - Cementious fiber board
W - Plywood

MHTN ARCHITECTS
MHTN Architects, Inc.
280 South 400 West
Suite 250
Salt Lake City, Utah 84101
Telephone (801) 595-6700
www.mhtn.com

JORDAN SCHOOL DISTRICT

JORDAN LEARNING CENTER

3706 WEST 9800 SOUTH
SOUTH JORDAN, UT 84095

©2023 MHTN ARCHITECTS, INC.
Confidentiality Notice
This document is intended for use on the Project identified herein by individuals and companies involved in the design, permitting, bidding and construction of the Project. MHTN Architects, Inc. grants limited rights to distribute and reproduce this document for this express purpose only. Distribution, printing or copying this document for purposes other than those indicated is strictly prohibited. If a digital copy of this document is received in error, please delete it.

SEAL

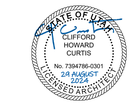

MHTN PROJECT NO. 2024528

Original drawing is 30 x 42. Do not scale contents of this drawing.

REVISIONS
CONTRACTOR TO VERIFY DRAWINGS IN FIELD. USE REFLECT LAST REVISION DATE.

NO.	DATE	DESCRIPTION

ISSUE
CONSTRUCTION DOCUMENTS
AUGUST 29, 2024

SHEET NAME
INTERIOR WALL TYPES

SHEET NUMBER
G500

Autodesk Docs://2024528 JSD Retail Remodel/A24 2024528 JSD Retail Remodel.rvt
8/28/2024 8:28:19 AM

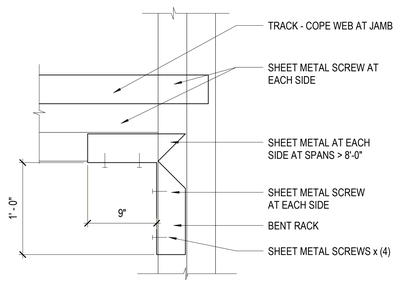

HEAD

C1 WALL OPENING CORNER DETAIL
SCALE: 1-1/2" = 1'-0"

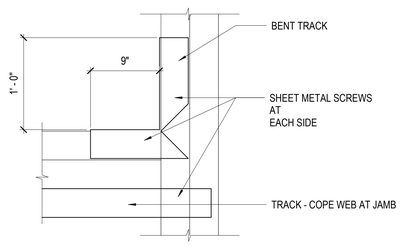

SILL

C2 OPENING CORNER DETAIL
SCALE: 1-1/2" = 1'-0"

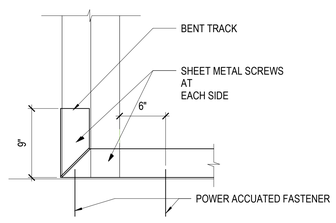

BASE AT SPANS > 8'-0"

C3 WALL BASE DETAIL
SCALE: 1-1/2" = 1'-0"

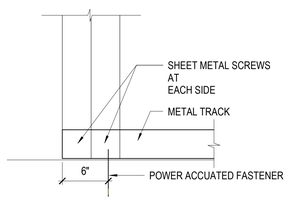

BASE AT SPANS < 8'-0"

C4 WALL BASE DETAIL
SCALE: 1-1/2" = 1'-0"

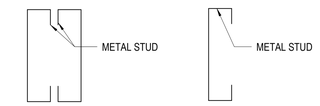

4B 3'-1" TO 20'-0"

4A 0" TO 3'-0"

C5 STUD DETAIL
SCALE: 1-1/2" = 1'-0"

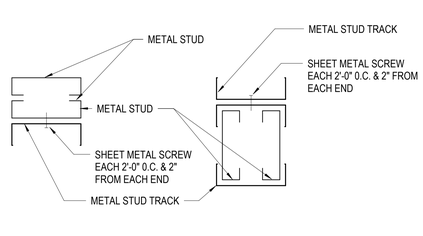

3C 8'-1" TO 14'-0"

3D 14'-1" TO 20'-0"

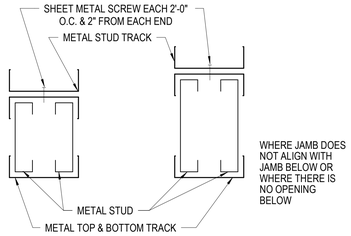

2C 8'-1" TO 14'-0"

2D 14'-1" TO 20'-0"

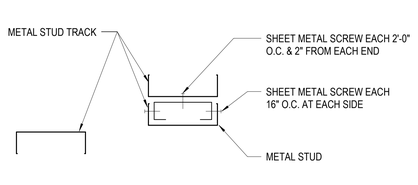

3A 0" to 4'-0"

3B 4'-1" to 8'-0"

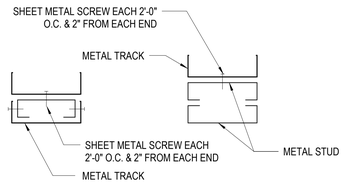

2A 0" TO 4'-0"

2B 4'-1" TO 8'-0"

A1 HEADER DETAILS
SCALE: 1-1/2" = 1'-0"

A2 HEADER DETAILS
SCALE: 1-1/2" = 1'-0"

NOTE:
3.5/8" Interior Stud: 362S162-33 @ 16" O.C. up to 16'-0" unsupported wall height. 6" Interior Stud: 600S162-33 @ 16" O.C. above 16'-0" unsupported wall height.

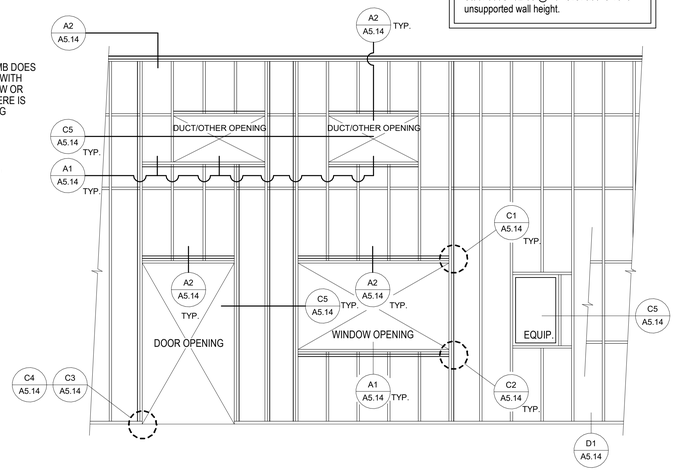

A3 WALL FRAMING DETAIL DIAGRAM
SCALE: 1-1/2" = 1'-0"

BACKING PLATE SCHEDULE

LOAD DIAGRAM/SECTION	PLAN DETAIL
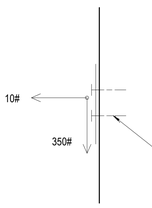	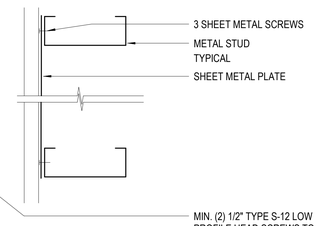

NOTES:

1. EXTEND BACKING PLATE TO NEXT STUD BEYOND SIDE OF FIXTURE OR ACCESSORY, ACROSS (3) STUDS MINIMUM.
2. PROVIDE MET. SLEEVES THROUGH WALL FINISH AT FIXTURE AND EQUIPMENT FASTENING.
3. FOR EQUIPMENT AND WORK TO BE ANCHORED SEE DETAILS.
4. FOR MECHANICAL WORK ANCHORAGE SEE MECHANICAL DRAWINGS.
5. FOR ELECTRICAL WORK ANCHORAGE SEE ELECTRICAL DRAWINGS.
6. MAX. LOADS SHOWN ARE MAX. ALLOWABLE LOADS FOR THE DIRECTION SHOWN. VERTICAL AND HORIZONTAL LOADS ARE NOT CUMULATIVE. E.I.: MAX. ALLOWABLE LOADS ARE FOR SHEAR-TENSION INTERACTION CALCULATION.

MHTN ARCHITECTS
MHTN Architects, Inc.
280 South 400 West
Suite 250
Salt Lake City, Utah 84101
Telephone (801) 595-6700
www.mhtn.com

JORDAN SCHOOL DISTRICT

JORDAN LEARNING CENTER
3706 WEST 9800 SOUTH
SOUTH JORDAN, UT 84009

©2023 MHTN ARCHITECTS, INC.
Confidentiality Notice
This document is intended for use on the Project identified herein by individuals and companies involved in the design, permitting, bidding and construction of the Project. MHTN Architects, Inc. grants limited rights to distribute and reproduce this document for such purposes. Any other distribution, copying or reproduction of this document for purposes other than those indicated is strictly prohibited. If a digital copy of this document is received in error, please delete it.

SEAL

MHTN PROJECT NO. 2024528

Original drawing is 30 x 42. Do not scale contents of this drawing.

REVISIONS
CONTRACTOR TO VERIFY DRAWINGS IN FIELD USE REFLECT LAST REVISION DATE.

NO.△	DATE	DESCRIPTION

ISSUE
CONSTRUCTION DOCUMENTS
AUGUST 29, 2024

SHEET NAME
INTERIOR WALL TYPES DETAILS

SHEET NUMBER
G501

Autodesk Docs://2024528 JSD Retail Remodel/A24 2024528 JSD Retail Remodel.rvt
8/29/2024 8:28:20 AM

JORDAN LEARNING CENTER

LOCATED IN THE NORTHWEST QUARTER OF SECTION 8,
TOWNSHIP 3 SOUTH, RANGE 1 WEST, SALT LAKE BASE AND MERIDIAN, U.S. SURVEY
SOUTH JORDAN, SALT LAKE COUNTY, UTAH

CONSTRUCTION DOCUMENTS

AUGUST 2024

PROJECT CONTACTS

PROPERTY OWNER DEVELOPER
JORDAN SCHOOL DISTRICT
7387 SOUTH VIEW DRIVE
WEST JORDAN, UT 84084
TEL: (801) 567-8100
ATTN:

ARCHITECT
MHTN ARCHITECTS
280 SOUTH 400 WEST, SUITE 250
SALT LAKE CITY, UT 84101
TEL: (801) 595-6700
ATTN: CLIFFORD CURTIS, AIA

CIVIL ENGINEER
GALLOWAY & COMPANY, INC.
172 N EAST PROMONTORY, SUITE 274
FARMINGTON, UT 84025
TEL: (801) 953-1357
CONTACT: DEVIN LUJAN, PE

SURVEYOR
GALLOWAY & COMPANY, INC.
172 N EAST PROMONTORY, SUITE 274
FARMINGTON, UT 84025
TEL: (385) 246-0480
CONTACT: TROY KENDALL, UAS PILOT

PLANNING
SOUTH JORDAN PLANNING AND ZONING
1600 W TOWNE CENTER DR.
SOUTH JORDAN, UT 84095
TEL: (801) 253-8306
ATTN:

PUBLIC WORKS
SOUTH JORDAN PUBLIC WORKS
10996 S REDWOOD ROAD
SOUTH JORDAN, UT 84095
TEL: (801) 446-4357
ATTN:

BUILDING DEPARTMENT
SOUTH JORDAN BUILDING DEPARTMENT
1600 W TOWNE CENTER DRIVE
SOUTH JORDAN, UT 84095
TEL: (801) 254-3742
ATTN: CORY DAY

ENGINEERING
SOUTH JORDAN ENGINEERING DEPARTMENT
1600 W TOWNE CENTER DRIVE
SOUTH JORDAN, UT 84095
TEL: (801) 254-3742
ATTN: SHANE GREENWOOD, PE

UTILITY CONTACTS

POWER
ROCKY MOUNTAIN POWER
TEL: (503) 813-6993

WATER
SOUTH JORDAN CITY WATER
TEL: (801) 253-5203

SANITARY SEWER
SOUTH VALLEY SEWER DISTRICT
TEL: (801) 561-7662

GAS
ENBRIDGE GAS, INC.
TEL: (877) 362-7434

STORM DRAIN
SOUTH JORDAN CITY UTILITIES
TEL: (801) 253-5203

TELECOMMUNICATIONS
COMCAST
TEL: (435) 224-2356

CENTRACOM INTERACTIVE
TEL: (435) 427-3331

LUMEN/CENTURYLINK
TEL: (385) 479-7357

FIRST DIGITAL
TEL: (801) 456-1095

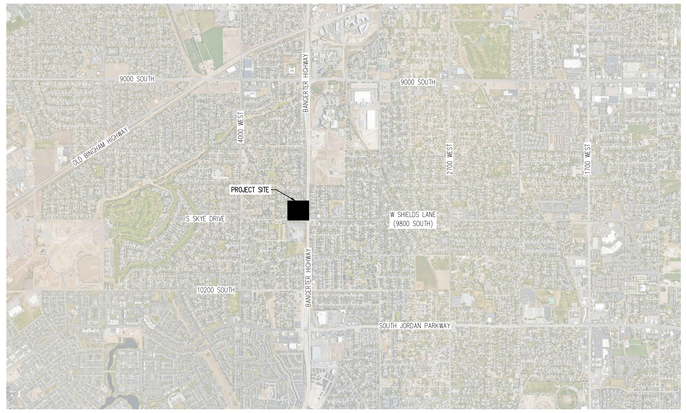

VICINITY MAP
NOT TO SCALE

N

SHEET LIST TABLE

Sheet Number	Sheet Title
CV100	Cover Sheet
CV101	General Notes
CD100	Demolition Plan
CS100	Site Plan
CS500	Site Details
CG100	Grading Plan
CU100	Utility Plan

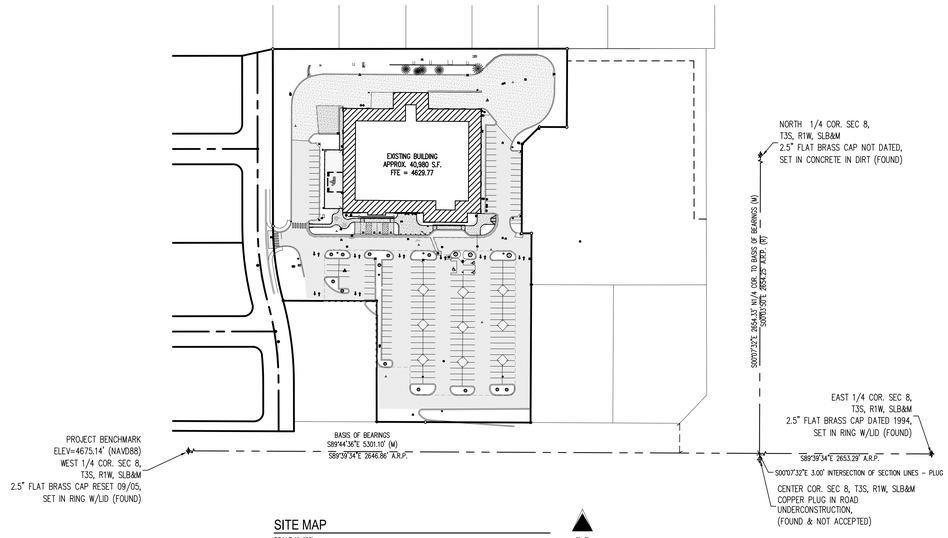

SITE MAP
SCALE 1"=100'

N

SURVEYOR TO OBTAIN AUTOCAD FILE FROM ENGINEER AND VERIFY ALL HORIZONTAL CONTROL DIMENSIONING PRIOR TO CONSTRUCTION STAKING. SURVEYOR MUST VERIFY ALL BENCHMARK, BASIS OF BEARING AND DATUM INFORMATION TO ENSURE IMPROVEMENTS WILL BE AT THE SAME HORIZONTAL AND VERTICAL LOCATIONS SHOWN ON THE DESIGN CONSTRUCTION DRAWINGS. PRIOR TO CONSTRUCTION STAKING ANY DISCREPANCY MUST BE REPORTED TO OWNER AND ENGINEER PRIOR TO CONTINUATION OF ANY FURTHER STAKING OR CONSTRUCTION WORK.

NOTE: CONTRACTOR SHALL PROTECT ALL EXISTING SURVEY MONUMENTATION. CONTRACTOR SHALL HAVE LICENSED SURVEYOR REPLACE ANY DAMAGED OR DISTURBED MONUMENTATION AT THEIR COST.

CONTRACTOR IS RESPONSIBLE FOR PROVIDING ALL INFORMATION FOR FINAL ACCEPTANCE OF WORK FOR ANY LOCAL, STATE OR FEDERAL AGENCY, UTILITY DISTRICT OR ANY OTHER AGENCY OR DISTRICT HAVING APPROVAL AUTHORITY OVER WORK. THIS INFORMATION MAY INCLUDE, BUT IS NOT LIMITED TO, AS-BUILT PLANS, CERTIFICATIONS, INSPECTIONS AND REPORTS.

NOTE: CONTRACTOR MUST COORDINATE WORK WITH UTILITY COMPANY AND CITY PRIOR TO BEGINNING WORK AND IS RESPONSIBLE FOR ALL MATERIALS, LABOR, REPAIRS, PERMITS, ETC. TO COMPLETE WORK AND RESTORE AREA TO SAME STATE PRIOR TO STARTING WORK.

BASIS OF BEARING

AN ASSUMED BEARING OF SOUTH 89°44'36" EAST BETWEEN A FOUND MONUMENT REPRESENTING THE WEST QUARTER CORNER (2.5" FLAT BRASS CAP RESET 09/05, SET IN RING WITH LID) OF SECTION 8, TOWNSHIP 3 SOUTH, RANGE 1 WEST, SALT LAKE BASE AND MERIDIAN AND A FOUND MONUMENT REPRESENTING THE EAST QUARTER CORNER (2.5" FLAT BRASS CAP DATED 1994, SET IN RING WITH LID) OF SAID SECTION 8, WAS USED AS THE BASIS OF BEARINGS FOR THIS SURVEY.

BENCHMARK

PROJECT BENCHMARK ELEVATION = 4675.14' (NAVD88) THE WEST QUARTER CORNER OF SECTION 8, TOWNSHIP 3 SOUTH, RANGE 1 WEST, SALT LAKE BASE AND MERIDIAN

LEGAL DESCRIPTION

COMMENCING FROM THE WEST QUARTER CORNER OF SECTION 8, TOWNSHIP 3 SOUTH, RANGE 1 WEST, SALT LAKE BASE AND MERIDIAN, THENCE S89°44'36"E, 2,438.61 FEET; THENCE N00°15'21"E, 48.49 FEET TO THE SOUTHEAST CORNER OF SOUTH JORDAN NEIGHBORHOOD MARKET SUBDIVISION, FILED IN THE SALT LAKE COUNTY RECORDER'S OFFICE AS ENTRY NUMBER 8296896, BOOK 2003P, PAGE 188; THENCE N89°43'16"W ALONG THE SOUTH LINE OF SAID SUBDIVISION 243.21 FEET TO THE SOUTHEAST CORNER OF LOT 1 AND POINT OF BEGINNING; THENCE CONTINUING ALONG SAID SOUTH LINE THE FOLLOWING TWO (2) COURSES:(1) N89°43'16"W, 171.41 FEET; (2) N89°45'56"W, 79.47 FEET; THENCE N00°03'58"W, 196.84 FEET; THENCE N89°43'16"W, 152.24 FEET TO THE EAST LINE OF ELK VIEW DRIVE AND THE WEST BOUNDARY LINE OF SAID SUBDIVISION; THENCE ALONG SAID LINE THE FOLLOWING THREE (3) COURSES: (1) ALONG A CURVE TO THE LEFT, HAVING A RADIUS OF 511.00 FEET, A CENTRAL ANGLE OF 00°12'17", A DISTANCE OF 1.82 FEET (CHORD BEARING N14°05'29"W, 1.82 FEET) TO THE BEGINNING OF A REVERSE CURVE; (2) ALONG SAID REVERSE CURVE TO THE RIGHT, HAVING A RADIUS OF 459.07 FEET, A CENTRAL ANGLE OF 15°09'03", A DISTANCE OF 121.39 FEET, (CHORD BEARING N07°38'30"W, 121.04 FEET); (3) N00°03'58"W, 288.62 FEET TO THE SOUTH BOUNDARY OF ELK MEADOWS ESTATES NO. 2, FILED IN THE SALT LAKE COUNTY RECORDER'S OFFICE AS ENTRY NUMBER 6207690, BOOK 95-11P, PAGE 308, AND THE NORTH BOUNDARY OF SAID SOUTH JORDAN NEIGHBORHOOD MARKET SUBDIVISION; THENCE N89°56'02"E WITH SAID NORTH LINE, 479.95 FEET; THENCE S00°16'44"W, 127.87 FEET; THENCE N89°43'16"W, 44.65 FEET; THENCE S45°16'44"W, 39.72 FEET; THENCE S00°16'44"W, 145.41 FEET; THENCE S89°43'16"E, 15.99 FEET; THENCE S00°16'44"W, 308.55 FEET TO THE POINT OF BEGINNING.
CONTAINS: 227,344 SQUARE FEET OR 5.22 ACRES, MORE OR LESS.
THIS DESCRIPTION DESCRIBES THE SAME REAL ESTATE AS THE RECORD DESCRIPTION.

CAUTION - NOTICE TO CONTRACTOR

1. ALL UTILITY LOCATIONS SHOWN ARE BASED ON MAPS PROVIDED BY THE APPROPRIATE UTILITY COMPANY AND FIELD SURFACE EVIDENCE AT THE TIME OF SURVEY AND IS TO BE CONSIDERED AN APPROXIMATE LOCATION ONLY. IT IS THE CONTRACTOR'S RESPONSIBILITY TO FIELD VERIFY THE LOCATION OF ALL UTILITIES, PUBLIC OR PRIVATE, WHETHER SHOWN ON THE PLANS OR NOT, PRIOR TO CONSTRUCTION. REPORT ANY DISCREPANCIES TO THE ENGINEER PRIOR TO CONSTRUCTION.

Know what's below. Call before you dig.

2. WHERE A PROPOSED UTILITY CROSSES AN EXISTING UTILITY, IT IS THE CONTRACTOR'S RESPONSIBILITY TO FIELD VERIFY THE HORIZONTAL AND VERTICAL LOCATION AND SIZE OF SUCH EXISTING UTILITY, EITHER THROUGH POTHOLING OR ALTERNATIVE METHOD. REPORT INFORMATION TO THE ENGINEER PRIOR TO CONSTRUCTION.

MHTN ARCHITECTS
MHTN Architects, Inc.
280 South 400 West
Suite 250
Salt Lake City, Utah 84101
Telephone (801) 595-6700
www.mhtn.com

Galloway
172 N. East Promontory, Suite 274
Farmington, UT 84025
801.953.1357
GallowayUS.com

JORDAN SCHOOL DISTRICT

JORDAN LEARNING CENTER
3706 WEST 9800 SOUTH
SOUTH JORDAN, UT 84009

Confidentiality Notice:
This document is intended for use on the Project identified herein by individuals and companies involved in the design, permitting, bidding and construction of the Project. MHTN Architects, Inc. grants limited rights to distribute and reproduce this document for this purpose only. Any other use, copying or reproduction of this document for purposes other than those indicated is strictly prohibited. If a digital copy of this document is received in error, please delete it.

SEAL

REGISTERED PROFESSIONAL ENGINEER
No. 11435455-2202
DEVIN LUJAN
08/29/2024
STATE OF UTAH

MHTN PROJECT NO. 2024528

Original drawing is 30 x 42. Do not scale contents of this drawing.

REVISIONS
CONTRACTOR TO VERIFY DRAWINGS IN FIELD USE REFLECT LAST REVISION DATE.

NO.	DATE	DESCRIPTION

ISSUE
CONSTRUCTION DOCUMENTS
AUGUST 29, 2024

SHEET NAME
COVER SHEET

SHEET NUMBER
CV100

DEMOLITION NOTES

1. ALL DEMOLITION TO BE IN ACCORDANCE WITH STATE, LOCAL, AND FEDERAL REQUIREMENTS.
2. CONTRACTOR TO OBTAIN ALL PERMITS AND LICENSES REQUIRED FOR DEMOLITION OF WORK SHOWN.
3. CONTRACTOR TO OBTAIN ALL STATE AND CITY STORM WATER DISCHARGE AND EROSION CONTROL PERMITS PRIOR TO ANY DISTURBANCE AND/OR GRADING ACTIVITY.
4. GENERAL CONTRACTOR SHALL BE RESPONSIBLE FOR MINIMIZING DEPOSITION OF ONSITE SEDIMENTS ONTO SURROUNDING PROPERTIES AND PUBLIC STREETS DURING CONSTRUCTION, MAINTAINING SWPPP DOCUMENTS, FILING NOI AND NOT, REFER TO EROSION CONTROL PLANS AND DETAILS FOR ADDITIONAL INFORMATION.
5. ALL UNDERGROUND STORM SEWER, WATER, AND SANITARY SEWER MAIN LOCATIONS ARE BASED ON MAPS PROVIDED BY THE APPROPRIATE UTILITY COMPANY AND FIELD SURFACE EVIDENCE AT THE TIME OF SURVEY AND IS TO BE CONSIDERED AN APPROXIMATE LOCATION ONLY.
6. ALL UNDERGROUND GAS AND ELECTRIC UTILITY INFORMATION SHOWN IS BASED ON MAPS PROVIDED BY UTILITY COMPANY AND ARE TO BE CONSIDERED AS AN APPROXIMATE LOCATION ONLY BASED ON SAID MAPS.
7. CONTRACTOR TO VERIFY ALL UTILITY SERVICE LOCATIONS AND EXISTING SITE CONDITIONS PRIOR TO PROCEEDING. ANY SITE CONDITIONS THAT ARE NOT AS SHOWN MUST BE REPORTED TO THE OWNER'S REPRESENTATIVE PRIOR TO BID.
8. CONTRACTOR TO REMOVE OR RELOCATE EXISTING UTILITIES PER UTILITY COMPANY REQUIREMENTS.
9. CONTRACTOR TO ERECT BARRIERS, FENCES, GUARDRAILS, ENCLOSURES, ETC. TO PROTECT SITE. THE PROTECTION PLAN MUST BE REVIEWED BY THE COMPANY REPRESENTATIVE PRIOR TO PROCEEDING.
10. COMPANY REPRESENTATIVE WILL DETERMINE WHEN CONDITIONS ARE SUITABLE TO COMMENCE WORK. CONTRACTOR TO VERIFY AREAS TO BE DEMOLISHED ARE UNOCCUPIED AND NOT IN USE.
11. TRANSPORT AND LEGALLY DISPOSE OF DEBRIS IN AREA LAWFUL CONSTRUCTION DEBRIS FACILITY. DO NOT STORE OR BURN MATERIALS ON SITE.
12. REMOVE ALL ASPHALT, TREES, POSTS AND OTHER IMPROVEMENTS UNLESS THE ITEM IS SPECIFIED TO REMAIN.
13. SEE PROJECT DOCUMENTS FOR EXISTING ITEMS TO BE SALVAGED AND OTHER REQUIREMENTS PERTAINING TO THE SALVAGE THEREOF.
14. REMOVE ALL EXISTING FOUNDATION WALLS AND FOOTINGS COMPLETELY UNLESS OTHERWISE NOTED OR SPECIFIED.
15. ANY FILL MATERIAL REQUIRED TO BRING THE SITE TO GRADE SHALL CONSIST OF CLEAN ENGINEERED FILL, IN ACCORDANCE WITH THE PROJECT DOCUMENTS AND APPROVED BY THE CIVIL AND GEOTECHNICAL ENGINEERS
18. ANY FILL MATERIAL IN OLD BASEMENTS, CESSPOOLS, AND OTHER LARGE EXCAVATED AREAS SHALL CONSIST OF CLEAN ENGINEERED FILL, IN ACCORDANCE WITH THE PROJECT DOCUMENTS AND APPROVED BY THE CIVIL AND GEOTECHNICAL ENGINEERS.
19. ALL FILL MATERIAL SHALL BE PLACED AND COMPACTED IN ACCORDANCE WITH THE GEOTECHNICAL REPORT RECOMMENDATIONS. GRADE TO MATCH EXISTING OR PROPOSED FINISHED GRADE.

GENERAL CONSTRUCTION NOTES

1. REQUIREMENTS SHOWN ON SITE PLAN SHALL GOVERN. DRAWINGS AND SPECIFICATIONS SHOWING OTHERWISE NOTWITHSTANDING, CONTRACTOR TO POINT OUT ANY DISCREPANCIES TO THE OWNER'S REPRESENTATIVE PRIOR TO BID.
2. NO WORK IS TO BEGIN UNTIL ALL PERMITS HAVE BEEN OBTAINED.
3. SEE THE SITE SURVEY FOR SURVEY INFORMATION & LEGAL DESCRIPTION.
4. VERIFY ALL DIMENSIONS AND CONDITIONS ON SITE. NOTIFY ENGINEER OF ANY DISCREPANCIES.
5. ALL WORK IN PUBLIC RIGHT OF WAY SHALL BE IN ACCORDANCE WITH APPLICABLE PUBLIC WORKS STANDARDS.
6. GENERAL CONTRACTOR TO REFER TO STANDARD DETAILS AND INSTALLATION GUIDELINES INCLUDED IN THE SPECIFICATIONS AND PRODUCT INFORMATION FOR INSTALLING EQUIPMENT, INCLUDING PRODUCT DISPENSERS AND REMOTE READ-OUT EQUIPMENT.
7. GENERAL CONTRACTOR TO PROVIDE BARRICADE PROTECTION WITH FLASHING LIGHTS AROUND ALL OFF-SITE EXCAVATIONS AND ALL OFF-SITE WORK.
8. SET PROPERTY CORNER PINS IN CONCRETE, IF PROPERTY CORNERS ARE DESTROYED BY CONTRACTOR, THE CONTRACTOR SHALL BEAR THE EXPENSE OF RELOCATING CORNERS BY A REGISTERED SURVEYOR.
9. CONTRACTOR TO PROVIDE ALL EQUIPMENT AND PERSONNEL REQUIRED FOR FINAL CHECKOUT OF ALL FACILITIES BY OWNER'S REPRESENTATIVE.
10. GENERAL CONTRACTOR TO PERFORM GENERAL YARD AND BUILDING CLEAN-UP AT COMPLETION OF WORK.
11. GENERAL CONTRACTOR SHALL BE RESPONSIBLE FOR MINIMIZING DEPOSITION OF ONSITE SEDIMENTS ONTO SURROUNDING PUBLIC STREETS DURING CONSTRUCTION, MAINTAINING SWPPP DOCUMENTS, FILING NOI AND NOT, REFER TO EROSION CONTROL PLANS AND DETAILS FOR ADDITIONAL INFORMATION.
12. THE CONTRACTOR SHALL BE RESPONSIBLE FOR RECORDING AS-BUILT INFORMATION ON A SET OF RECORD DRAWINGS KEPT ON THE CONSTRUCTION SITE, AND AVAILABLE TO THE CITY, ITS AGENTS, OWNER OR GALLOWAY AT ALL TIMES. DIMENSIONS SHALL BE ANNOTATED ON AS-BUILT RECORD DRAWINGS.
13. TRENCHES SHALL BE SLOPED OR BRACED AND SHEETED AND IN ACCORDANCE WITH OSHA STANDARDS FOR THE SAFETY OF THE WORKERS AND THE PROTECTION OF OTHER UTILITIES, IN COMPLIANCE WITH ALL APPLICABLE STATE OF FEDERAL REQUIREMENTS. FOR ALL EXCAVATION OPERATIONS, SAFETY IS THE RESPONSIBILITY OF THE CONTRACTOR.
14. ALL FERROUS METAL MATERIAL BURIED BELOW GRADE TO BE WRAPPED IN POLY WRAP OR CATHODICALLY PROTECTED TO PREVENT CORROSION WHERE ON-SITE SOIL, BEDROCK, AND LOCAL IMPORT SOIL SOURCES CONTAIN SULFATE CONCENTRATIONS CORRESPONDING TO SEVERE POTENTIAL SULFATE ATTACK ON CONCRETE EXPOSED TO THESE MATERIALS.
15. CONTRACTOR TO PROVIDE CONCRETE JOINTING PLAN SUBMITTAL TO ENGINEER FOR APPROVAL A MINIMUM OF X WEEKS BEFORE CONCRETE IS POURED.

GRADING NOTES

1. ELEVATIONS ON THIS PLAN MAY BE EXPRESSED WITH THE FIRST TWO DIGITS TRUNCATED, ADD 4600TO THESE ELEVATIONS ACCORDINGLY.
2. ALL SPOT GRADES ARE TO FLOWLINE UNLESS OTHERWISE NOTED.
3. PROPOSED FLOWLINE ELEVATION DOES NOT TAKE INTO ACCOUNT GUTTER DEPRESSION AT INLET.
4. ALL TOP OF CURB ELEVATIONS ARE 6" HIGHER THAN FLOWLINE ELEVATIONS SHOWN ON DRIVES UNLESS OTHERWISE NOTED.
5. FINAL GRADES ARE SUBJECT TO MINOR CHANGE BY COMPANY REPRESENTATIVE. NO GRADE CHANGES IN EXCESS OF 0.04' WITHOUT ENGINEER'S APPROVAL
6. GRADING/UTILITY CONTRACTOR TO COMPLETE GRADING BELOW FINISHED GRADE IN ACCORDANCE WITH PAVING RECOMMENDATIONS OF THE GEOTECHNICAL REPORT PREPARED FOR THIS SITE, SHOWN TO TOLERANCE OF ± 0.04' IN ALL PAVING AREAS.
7. ALL LANDSCAPING AREAS SHALL BE GRADED TO WITHIN 0.10' WITH LANDSCAPE ARCHITECT APPROVED TOP SOIL TO A MINIMUM 6" DEPTH OR AS DIRECTED BY THE LANDSCAPE ARCHITECT.
8. CONTRACTOR MUST MAINTAIN RUNNING SLOPE ON ALL SIDEWALKS NO STEEPER THAN 5.0%, THE CROSS-SLOPE FOR ALL SIDEWALKS MUST BE NO STEEPER THAN 2.0%. ALL SIDEWALKS MUST HAVE A MINIMUM CLEAR WIDTH OF 60". ALL ADA RAMPS SHALL HAVE A SLOPE NO STEEPER THAN 8.33%. ADA PARKING SPACES AND REFUGE GRADES SHALL NOT EXCEED 2% IN ANY DIRECTION. IF GRADES ON GRADING PLAN DO NOT MEET THIS REQUIREMENT, NOTIFY ENGINEER IMMEDIATELY.
9. THE CLIENT AND CONTRACTOR SHOULD IMMEDIATELY NOTIFY THE ENGINEER OF ANY CONDITIONS IN THE PROJECT THAT THEY BELIEVE DO NOT COMPLY WITH THE CURRENT STATE OF THE ADA AND FHAA.
10. THE SITE SHALL BE CLEARED AND GRUBBED OF ALL VEGETATION AND DELETERIOUS MATTER PRIOR TO GRADING.
11. NO GEOTECHNICAL REPORT WAS AVAILABLE FOR THIS PROJECT,.
12. REGARDLESS OF DISCLAIMERS IN THE BID, IF THE CONTRACTOR'S EARTHWORK BID ASSUMES EXISTING SITE MATERIAL IS REUSABLE, AND EITHER THE MATERIAL IS NOT APPROVED FOR REUSE OR THE USE OF THE MATERIAL CAUSES DELAYS AND EXTRA COSTS, THE CONTRACTOR SHALL BE SOLELY RESPONSIBLE FOR THE IMPACTS TO COST AND SCHEDULE.
13. ANY FILL MATERIAL REQUIRED TO BRING THE SITE TO GRADE SHALL CONSIST OF CLEAN ENGINEERED FILL, IN ACCORDANCE WITH THE PROJECT DOCUMENTS AND APPROVED BY THE CIVIL AND GEOTECHNICAL ENGINEERS.
14. ANY FILL MATERIAL IN OLD BASEMENTS, CESSPOOLS, AND OTHER LARGE EXCAVATED AREAS SHALL CONSIST OF CLEAN ENGINEERED FILL, IN ACCORDANCE WITH THE PROJECT DOCUMENTS AND APPROVED BY THE CIVIL AND GEOTECHNICAL ENGINEERS.
15. ALL FILL MATERIAL SHALL BE PLACED AND COMPACTED IN ACCORDANCE WITH THE GEOTECHNICAL REPORT RECOMMENDATIONS. GRADE TO MATCH EXISTING OR PROPOSED FINISHED GRADE.
16. FILLS SHALL BE BENCHED INTO COMPETENT MATERIAL AS PER CIVIL SPECIFICATIONS AND RECOMMENDATIONS IN THE GEOTECHNICAL REPORT.
17. ALL TRENCH BACKFILL SHALL BE TESTED AND CERTIFIED BY THE GEOTECHNICAL ENGINEER.
18. A GEOTECHNICAL ENGINEER SHALL PERFORM PERIODIC INSPECTIONS AND SUBMIT A COMPLETE REPORT UPON COMPLETION.
19. THE FINAL COMPACTION REPORT AND CERTIFICATION FROM THE GEOTECHNICAL ENGINEER SHALL CONTAIN THE TYPE OF FIELD TESTING PERFORMED, EACH TEST SHALL BE IDENTIFIED WITH THE METHOD OF OBTAINING THE IN-PLACE DENSITY, WHETHER SAND CONE OR DRIVE RING AND SHALL BE SO NOTED FOR EACH TEST. SUFFICIENT MAXIMUM DENSITY DETERMINATIONS SHALL BE PERFORMED TO VERIFY THE ACCURACY OF THE MAXIMUM DENSITY CURVES USED BY THE FIELD TECHNICIAN.
20. CUT AND FILL SLOPES SHALL BE NO STEEPER THAN 2:1 (H/V).
21. CONTRACTOR TO OBTAIN ALL STATE AND CITY STORM WATER DISCHARGE AND EROSION CONTROL PERMITS PRIOR TO ANY DISTURBANCE AND/OR GRADING ACTIVITY.

GENERAL UTILITY NOTES

1. THE CONTRACTOR SHALL NOTIFY THE CITY, COUNTY AND REGULATORY AGENCY 72 WORKING HOURS PRIOR TO BEGINNING CONSTRUCTION.
2. THE CONTRACTOR SHALL HAVE ONE SIGNED COPY OF THE APPROVED PLANS, ONE COPY OF THE APPROPRIATE STANDARDS AND SPECIFICATIONS AND A COPY OF ANY PERMITS AND EXTENSION AGREEMENTS NEEDED AT THE JOB SITE AT ALL TIMES.
3. CONTRACTOR SHALL OBTAIN ALL NECESSARY TEMPLATES FROM EQUIPMENT SUPPLIERS AND STUB LINES ACCORDINGLY.
4. CONTRACTOR SHALL OBTAIN AND PAY FOR ALL TAP FEES REQUIRED. OWNER SHALL PAY FOR ALL SPECIAL ASSESSMENTS.
5. CONTRACTOR IS RESPONSIBLE FOR ALL SURFACE RESTORATION (I.E., LANDSCAPE, ASPHALT, CONCRETE, ETC.)
6. ASPHALT / ROAD BASE, ETC. (FOR PAVEMENT CONSTRUCTION) TO BE INSTALLED ABOVE PIPE BACKFILL SHALL BE ACCORDING TO GEOTECHNICAL REPORT PREPARED FOR THIS PROJECT OR CITY/PURVEYOR STANDARDS, WHICHEVER IS MORE STRINGENT.
7. THE CONTRACTOR SHALL VERIFY THE INVERTS OF THE DOWNSTREAM TIE IN POINTS FOR ALL GRAVITY FLOW UTILITIES PRIOR TO BEGINNING ANY CONSTRUCTION. REPORT ANY DISCREPANCY TO THE ENGINEER.
8. CONTRACTOR TO VERIFY THE HORIZONTAL AND VERTICAL LOCATION OF ALL UTILITIES, WHETHER SHOWN OR NOT, PRIOR TO CONSTRUCTION. REPORT ANY CONFLICTS TO THE ENGINEER.
9. ALL MANHOLE RIM ELEVATIONS GIVEN ON THESE PLANS ARE TO BE CONSIDERED APPROXIMATE. THE CONTRACTOR SHALL SET THE FINAL RIM ELEVATION BASED ON THE COMPLETED FINISH SURFACE.
10. LENGTHS OF PIPES ARE THE HORIZONTAL DISTANCES FROM CENTER OF STRUCTURE TO CENTER OF STRUCTURE. THEREFORE, LENGTHS SHOWN ARE APPROXIMATE AND COULD VARY DUE TO VERTICAL ALIGNMENT AND STRUCTURE DIMENSIONS.
11. ALL CULINARY WATER MAINS AND SERVICE LINES SHALL BE BURIED AN ABSOLUTE MINIMUM OF 48" FROM FINISHED GRADE. THE MAXIMUM BURY SHALL BE 60", UNLESS ADDITIONAL DEPTH IS REQUIRED FOR UTILITY CROSSINGS OR OTHER CONFLICTS. WHEREVER SUCH CROSSINGS OR CONFLICTS OCCUR, THE CITY/PURVEYOR CROSSING DETAIL SHALL BE USED.
12. ALL STORM DRAIN AND SANITARY SEWER PIPES SHALL HAVE A MINIMUM HORIZONTAL SEPARATION OF 10' FROM ALL WATER LINES.
13. WHERE LINES CROSS, THERE SHALL BE A MINIMUM OF 18" CLEAR VERTICAL SEPARATION BETWEEN ALL WATER LINES AND STORM DRAIN, SANITARY SEWER, AND IRRIGATION LINES.
14. ANY STORM DRAIN LINE CROSSING AT LEAST 18" ABOVE A WATER LINE SHALL HAVE JOINTS ENCASED IN CONCRETE PER THE APPROPRIATE CROSSING DETAIL PROVIDED BY THE CITY / PURVEYOR. ANY STORM DRAIN LINE CROSSING LESS THAN 18" ABOVE A WATER LINE SHALL BE FULLY ENCASED IN CONCRETE PER THE APPROPRIATE ENCASEMENT DETAIL PROVIDED BY THE CITY / PURVEYOR.
15. ALL UTILITY LINES SHALL BE BEDDED IN ACCORDANCE WITH CITY / LOCAL PURVEYOR'S STANDARDS AND DETAILS, INCLUDED IN THE PLAN SET. STORM SEWER PIPE SHALL BE BEDDING CLASS "B" UNLESS THE GEOTECHNICAL ENGINEER OR CITY ENGINEER DEEM NECESSARY A CHANGE IN BEDDING CLASS DUE TO SOIL CONDITION.
16. WHERE A PROPOSED UTILITY CROSSES AN EXISTING UTILITY, IT IS THE CONTRACTOR'S RESPONSIBILITY TO FIELD VERIFY THE HORIZONTAL AND VERTICAL LOCATION OF SUCH EXISTING UTILITY, EITHER THROUGH POT HOLING OR ALTERNATIVE METHOD. REPORT INFORMATION TO THE ENGINEER PRIOR TO CONSTRUCTION.

PRIVATE STORM WATER NOTES

1. ALL STORM DRAINAGE PIPE SHALL BE REINFORCED CONCRETE PIPE (RCP) PER ASTM C76, CL III OR CL IV FOR SIZES 15" AND LARGER, AND JOINTING SHALL CONFORM TO ASTM C443. 12" AND SMALLER SHALL BE PVC (SDR-35), AND SHALL BE IN ACCORDANCE WITH ASTM D-3034; ANY STORM DRAINAGE PIPE UNDER A PROPOSED OR FUTURE TRAFFIC AREA SHALL BE RCP CL III AS A MINIMUM, RCP TO BE JACKED SHALL BE CL-V AS A MINIMUM.
2. PROPOSED CATCH BASIN AND INLET BOX GRATES ARE TO BE BICYCLE PROOF, GRATES LOCATED WITHIN WALKWAYS ARE TO BE HEEL PROOF.
3. TOP OF GRATE (TG) AND FLOW LINE (FL) SPOT GRADES AT INLETS DO NOT INCLUDE GUTTER DEPRESSION.
4. ALL STORM DRAINAGE PIPE SHALL HAVE A MINIMUM COVER OF 24", UNLESS OTHERWISE NOTED. UNDER NO CIRCUMSTANCES WILL ANY PIPE HAVE LESS THAN 18" COVER FROM THE FINISH SURFACE TO THE OUTSIDE WALL OF THE PIPE.
5. CONTRACTOR SHALL REFER TO ARCHITECTURAL PLANS FOR EXACT LOCATIONS OF ROOF AND CANOPY DOWNSPOUTS. CONTRACTOR IS RESPONSIBLE FOR FINAL COORDINATION OF SIZE, LOCATION, AND DEPTH OF ROOF DRAINS.
6. PROPOSED STORM DRAIN INLET GRATES WITHIN THE PLAYGROUND SOFT-FALL AREAS ARE TO BE WRAPPED IN NON-WOVEN FILTER FABRIC MIRAFI 140N OR BETTER PERMITTIVITY. A SECOND LAYER OF FABRIC SHALL BE PLACED OVER GRATES EXTENDING 12" IN ANY DIRECTION.

MHTN ARCHITECTS
MHTN Architects, Inc.
280 South 400 West
Suite 250
Salt Lake City, Utah 84101
Telephone (801) 595-6700
www.mhtn.com

Galloway
172 N. East Promontory, Suite 274
Farmington, UT 84025
801.953.1357
GallowayUS.com

JORDAN SCHOOL DISTRICT

JORDAN LEARNING CENTER

3706 WEST 9800 SOUTH
SOUTH JORDAN, UT 84009

Confidentiality Notice:
This document is intended for use on the Project identified herein by individuals and companies involved in the design, permitting, bidding and construction of the Project. MHTN Architects, Inc. grants limited rights to distribute and reproduce this document for this express purpose only. Distribution, printing or copying this document for purposes other than those indicated is strictly prohibited. If a digital copy of this document is received in error, please delete it.

SEAL

REGISTERED PROFESSIONAL ENGINEER
No. 11435435-2202
DEVIN LUJAN
08/29/2024
STATE OF UTAH

MHTN PROJECT NO. 2024528

Original drawing is 30 x 42. Do not scale contents of this drawing.

REVISIONS
CONTRACTOR TO VERIFY DRAWINGS IN FIELD USE REFLECT
LAST REVISION DATE:

NO	DATE	DESCRIPTION
A		

ISSUE
CONSTRUCTION DOCUMENTS
AUGUST 29, 2024

SHEET NAME
GENERAL NOTES

SHEET NUMBER
CV101

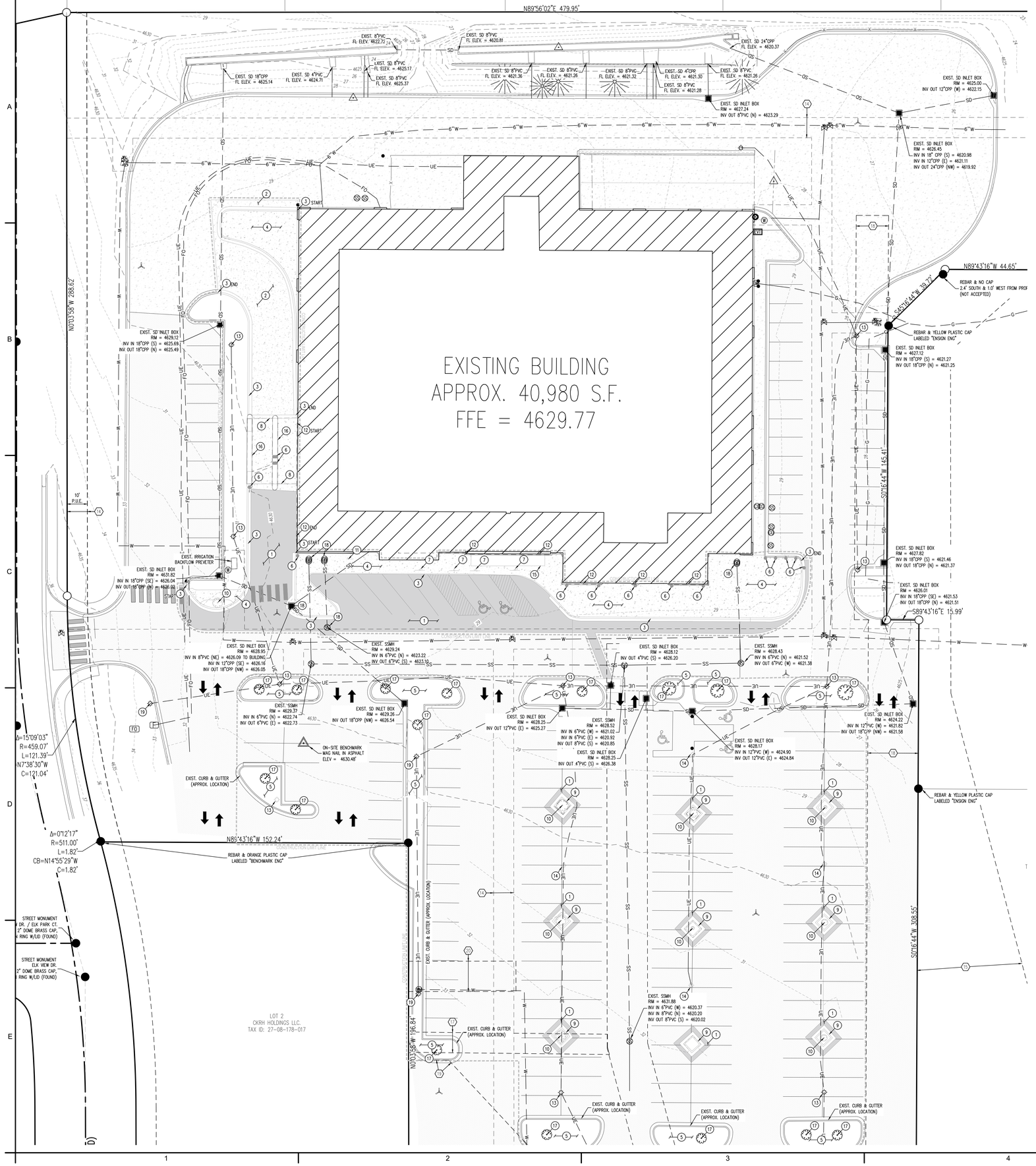

N

0 10 20

SCALE: 1"=20'

DEMOLITION KEYNOTES

1. DEMO EXISTING ASPHALT.
2. DEMO EXISTING CONCRETE PAVEMENT TO NEAREST JOINT.
3. DEMO EXISTING CURB & GUTTER.
4. DEMO EXISTING CONCRETE SIDEWALK.
5. CLEAR & GRUB. PROTECT EXIST. IRRIGATION VALVES AND MAIN LINES.
6. DEMO EXISTING BOLLARD.
7. DEMO EXISTING BOLLARD-MOUNTED SIGN.
8. DEMO EXISTING BUILDING CANOPY, REF. ARCH. PLANS.
9. DEMO EXISTING DIAMOND LANDSCAPE ISLANDS.
10. DEMO EXISTING TREE.
11. DEMO EXISTING BIKE RACK.
12. DEMO EXISTING CURB WALL.
13. REMOVE AND REPLACE EXISTING LIGHT POLE. REF. ELECTRICAL PLANS.
14. DEMO EXISTING LIGHT POLE.
15. DEMO EXISTING AWNING.
16. DEMO EXISTING DRIVE THROUGH COLUMNS, CONCRETE ISLANDS AND BOLLARDS.
17. RETAIN & PROTECT EXISTING TREE & ROOTBALL.
18. ADJUST RIM TO MATCH FINISH GRADE SURFACE.
19. EXISTING LIGHT POLE TO REMAIN. PROTECT IN PLACE.

DEMOLITION LEGEND

- DEMOLITION LIMIT LINE
- 4310 EXISTING MAJOR CONTOUR
- 11 EXISTING MINOR CONTOUR
- PROPERTY BOUNDARY LINE
- LOT LINE
- EXISTING EASEMENT
- X EXISTING FENCE
- EXISTING TO REMAIN
- EXISTING TO BE REMOVED
- EXISTING CURB AND GUTTER
- EXISTING TREE TO REMAIN
- EXISTING TREE TO BE REMOVED
- EXISTING BOLLARD
- EXISTING SIGN
- EXISTING ASPHALT TO REMAIN
- EXISTING ASPHALT TO BE REMOVED
- EXISTING SIDEWALK TO REMAIN
- EXISTING SIDEWALK TO BE REMOVED
- W EXISTING WATER
- SD EXISTING STORM DRAIN
- SS EXISTING SANITARY SEWER
- G EXISTING GAS
- UE EXISTING UNDERGROUND POWER
- FO EXISTING FIBER OPTIC LINE
- EVT EXISTING ELECTRICAL VAULT
- F EXISTING FIBER OPTICS BOX
- FO EXISTING FIBER OPTICS PEDESTAL
- EXISTING LIGHT POLE
- EXISTING FIRE HYDRANT
- EXISTING WATER VALVE
- EXISTING WATER MANHOLE
- SS EXISTING SANITARY SEWER MANHOLE
- EXISTING STORM DRAIN BOX
- GM EXISTING GAS METER

EASEMENT SCHEDULE

13. EASEMENTS AND LIMITATION OF ACCESS POINTS TO AND FROM BANGERTER HIGHWAY AND ITS INTERSECTIONS.
14. EASEMENTS, NOTES AND RESTRICTIONS AS SHOWN ON THE RECORDED PLAT OF SOUTH JORDAN NEIGHBORHOOD MARKET SUBDIVISION.
15. EASEMENTS WITH COVENANTS AND RESTRICTIONS AFFECTING LAND ("ECR"): BY: WAL-MART REAL ESTATE BUSINESS TRUST, A DELAWARE BUSINESS TRUST; SHIPP FAMILY LIMITED PARTNERSHIP, A UTAH LIMITED PARTNERSHIP; AND Y-FIVE, LTD., A UTAH LIMITED PARTNERSHIP.
16. EASEMENT: IN FAVOR OF: SOUTH VALLEY SEWER DISTRICT.
17. EASEMENT: IN FAVOR OF: WAL-MART REAL ESTATE BUSINESS TRUST.
18. RIGHT-OF-WAY AND EASEMENT GRANT: IN FAVOR OF: QUESTAR GAS COMPANY
19. ACCESS EASEMENT: IN FAVOR OF: AMSOURCE SOUTH JORDAN WMP, LLC, A UTAH LIMITED LIABILITY COMPANY.
20. UTILITY EASEMENT: IN FAVOR OF: AMSOURCE SOUTH JORDAN WMP, LLC, A UTAH LIMITED LIABILITY COMPANY.
22. TEMPORARY EASEMENT: IN FAVOR OF: UTAH DEPARTMENT OF TRANSPORTATION. (ENTRY NO.: 14229231)
23. TEMPORARY EASEMENT: IN FAVOR OF: UTAH DEPARTMENT OF TRANSPORTATION. (ENTRY NO.: 14229232)

SURVEYOR TO OBTAIN AUTOCAD FILE FROM ENGINEER AND VERIFY ALL HORIZONTAL CONTROL DIMENSIONING PRIOR TO CONSTRUCTION STAKING. SURVEYOR MUST VERIFY ALL BENCHMARK, BASIS OF BEARING AND DATUM INFORMATION TO ENSURE IMPROVEMENTS WILL BE AT THE SAME HORIZONTAL AND VERTICAL LOCATIONS SHOWN ON THE DESIGN CONSTRUCTION DRAWINGS. PRIOR TO CONSTRUCTION STAKING ANY DISCREPANCY MUST BE REPORTED TO OWNER AND ENGINEER PRIOR TO CONTINUATION OF ANY FURTHER STAKING OR CONSTRUCTION WORK.

NOTE: CONTRACTOR SHALL PROTECT ALL EXISTING SURVEY MONUMENTATION. CONTRACTOR SHALL HAVE LICENSED SURVEYOR REPLACE ANY DAMAGED OR DISTURBED MONUMENTATION AT THEIR COST.

CONTRACTOR IS RESPONSIBLE FOR PROVIDING ALL INFORMATION FOR FINAL ACCEPTANCE OF WORK FOR ANY LOCAL, STATE OR FEDERAL AGENCY, UTILITY DISTRICT OR ANY OTHER AGENCY OR DISTRICT HAVING APPROVAL AUTHORITY OVER WORK. THIS INFORMATION MAY INCLUDE, BUT IS NOT LIMITED TO, AS-BUILT PLANS, CERTIFICATIONS, INSPECTIONS AND REPORTS.

NOTE: CONTRACTOR MUST COORDINATE WORK WITH UTILITY COMPANY AND CITY PRIOR TO BEGINNING WORK AND IS RESPONSIBLE FOR ALL MATERIALS, LABOR, REPAIRS, PERMITS, ETC. TO COMPLETE WORK AND RESTORE AREA TO SAME STATE PRIOR TO STARTING WORK.

CAUTION - NOTICE TO CONTRACTOR

1. ALL UTILITY LOCATIONS SHOWN ARE BASED ON MAPS PROVIDED BY THE APPROPRIATE UTILITY COMPANY AND FIELD SURFACE EVIDENCE AT THE TIME OF SURVEY AND IS TO BE CONSIDERED AN APPROXIMATE LOCATION ONLY. IT IS THE CONTRACTOR'S RESPONSIBILITY TO FIELD VERIFY THE LOCATION OF ALL UTILITIES, PUBLIC OR PRIVATE, WHETHER SHOWN ON THE PLANS OR NOT, PRIOR TO CONSTRUCTION. REPORT ANY DISCREPANCIES TO THE ENGINEER PRIOR TO CONSTRUCTION.

Know what's below. Call before you dig.

2. WHERE A PROPOSED UTILITY CROSSES AN EXISTING UTILITY, IT IS THE CONTRACTOR'S RESPONSIBILITY TO FIELD VERIFY THE HORIZONTAL AND VERTICAL LOCATION AND SIZE OF SUCH EXISTING UTILITY, EITHER THROUGH POTHOLING OR ALTERNATIVE METHOD. REPORT INFORMATION TO THE ENGINEER PRIOR TO CONSTRUCTION.

MHTN ARCHITECTS
MHTN Architects, Inc.
280 South 400 West
Suite 250
Salt Lake City, Utah 84101
Telephone (801) 595-6700
www.mhtn.com

Galloway
172 N. East Promontory, Suite 274
Farmington, UT 84025
801.953.1357
GallowayUS.com

JORDAN SCHOOL DISTRICT

JORDAN LEARNING CENTER
3706 WEST 9800 SOUTH
SOUTH JORDAN, UT 84009

Confidentiality Notice:
This document is intended for use on the Project identified herein by individuals and companies involved in the design, permitting, bidding and construction of the Project. MHTN Architects, Inc. grants limited rights to distribute and reproduce this document for this express purpose only. Distribution, printing or copying this document for purposes other than those indicated is strictly prohibited. If a digital copy of this document is received in error, please delete it.

SEAL

REGISTERED PROFESSIONAL ENGINEER
No. 11435453-2202
DEVIN LUJAN
08/29/2024
STATE OF UTAH

MHTN PROJECT NO. 2024528

Original drawing is 30 x 42. Do not scale contents of this drawing.

REVISIONS
CONTRACTOR TO VERIFY DRAWINGS IN FIELD LISE REFLECT LAST REVISION DATE.

NO.	DATE	DESCRIPTION

ISSUE
CONSTRUCTION DOCUMENTS
AUGUST 29, 2024

SHEET NAME
DEMOLITION PLAN

SHEET NUMBER
CD100

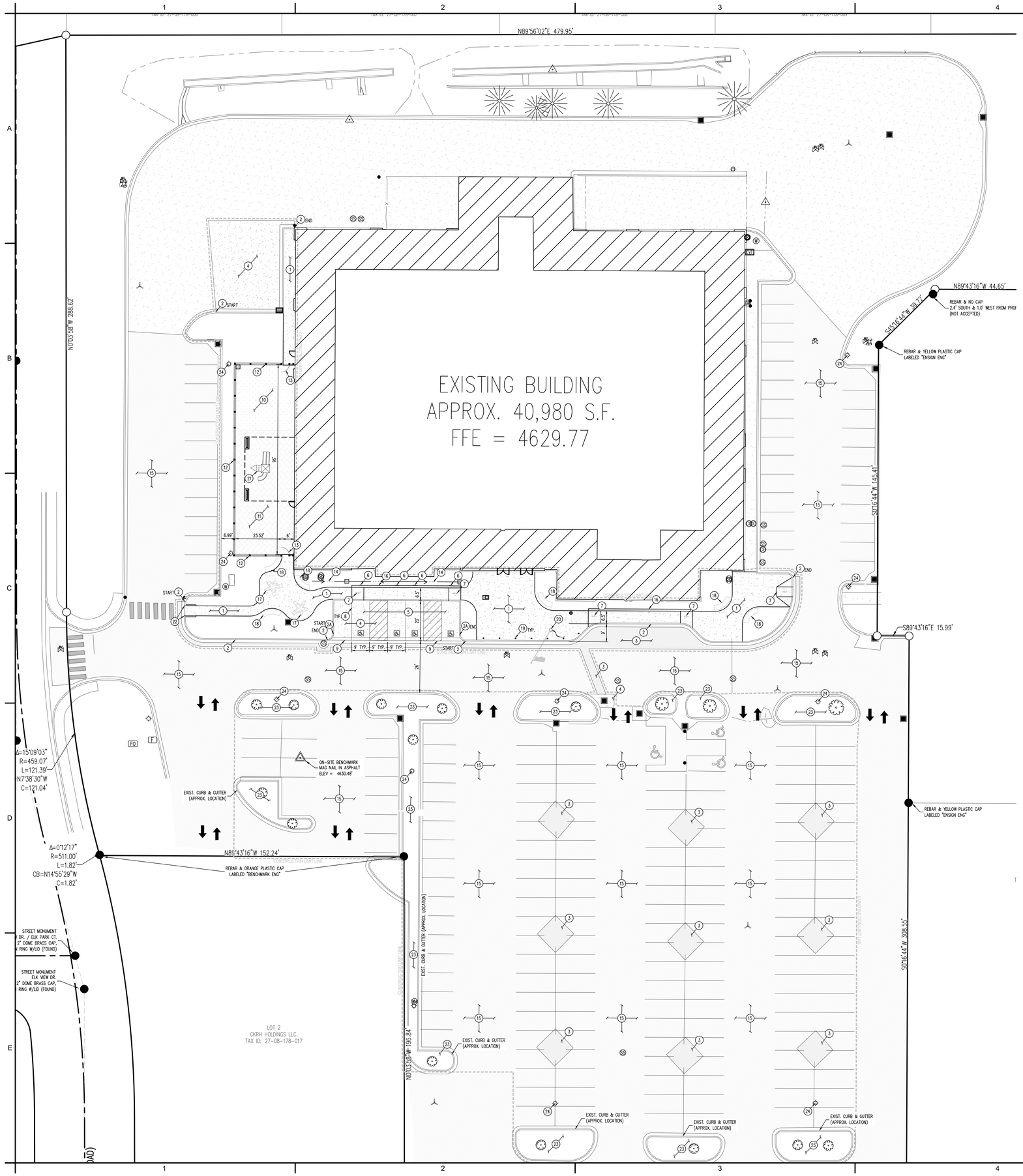

SITE KEYNOTES

1. CONSTRUCT CONCRETE SIDEWALK. SEE DETAIL 1 &2 ON SHEET CS500.
2. CONSTRUCT 24" CURB AND GUTTER. SEE DETAIL 3 ON SHEET CS500.
24. CONSTRUCT CURB. SEE DETAIL 4 ON SHEET CS500.
3. CONSTRUCT ASPHALT PAVEMENT PATCH. SEE DETAIL 6 AND 15 ON SHEET CS500 AND MATCH EXISTING CONCRETE PAVEMENT SECTION.
4. CONSTRUCT CONCRETE PAVEMENT. SEE DETAIL 2 & 6 ON SHEET CS500 AND MATCH EXISTING PAVEMENT SECTION.
5. CONSTRUCT ADA PARKING. SEE DETAIL 10 & 11 ON SHEET CS500.
6. CONSTRUCT ADA PARKING SIGN. SEE DETAILS 12-14 ON SHEET CS500.
7. CONSTRUCT ADA RAMP. SEE DETAIL 7 & 8 ON SHEET CS500.
8. CONSTRUCT 4" WHITE PARKING STRIPING. SEE DETAIL 9 ON SHEET CS500.
9. CONSTRUCT 3' CONCRETE WATER WAY. SEE DETAIL 5 ON SHEET CS500.
10. CONSTRUCT ARTIFICIAL TURF. SEE LANDSCAPE PLANS FOR DETAILS.
11. CONSTRUCT PLAY SURFACE. SEE LANDSCAPE PLANS FOR DETAILS.
12. CONSTRUCT ORNAMENTAL FENCE. SEE LANDSCAPE PLANS FOR DETAILS.
13. CONSTRUCT GATE. SEE LANDSCAPE PLANS FOR DETAILS.
14. CONSTRUCT LANDSCAPED SWALE. SEE SHEET CG100 FOR DETAILS.
15. CHIP SEAL, SLURRY COAT & RESTRIPE EXISTING ASPHALT PARKING LOT.
16. CONSTRUCT 18" CONCRETE SEAT WALL. SEE LANDSCAPE PLANS FOR DETAILS.
17. INSTALL TABLE. SEE LANDSCAPE PLANS FOR DETAILS.
18. CONSTRUCT PLAYGROUND STRUCTURE. SEE LANDSCAPE PLANS FOR DETAILS.
19. CONSTRUCT BOLLARD. SEE LANDSCAPE PLANS FOR DETAILS.
20. CONSTRUCT FLAG POLE. SEE LANDSCAPE PLANS FOR DETAILS.
21. CONSTRUCT PRE-CAST CONCRETE BENCH. SEE LANDSCAPE PLANS FOR DETAILS.
22. CONSTRUCT CURB CUT. SEE GRADING PLAN FOR DETAILS.
23. PROPOSED STONE MULCH. SEE LANDSCAPE PLANS FOR DETAILS.
24. CONSTRUCT NEW LIGHT POLE. FIXTURE AND BASE IN APPROXIMATELY THE SAME LOCATION AS THE EXISTING. SEE ELECTRICAL PLANS.

N

0 10 20

SCALE: 1"=20'

SITE LEGEND

- CONSTRUCTION LIMIT LINE
- PROPERTY BOUNDARY LINE
- LOT LINE
- EXISTING EASEMENT LINE
- EXISTING TO REMAIN
- PROPOSED NEW
- EXISTING FENCE
- PROPOSED SWALE FLOW LINE
- EXISTING LIGHT POLE
- EXISTING TREE
- PROPOSED TREES - SEE LANDSCAPE PLANS
- EXISTING BOLLARD
- PROPOSED BOLLARD
- EXISTING SIGN
- PROPOSED SIGN
- 5 PROPOSED STALL COUNT
- PROPOSED CATCH CURB AND GUTTER
- EXISTING CURB AND GUTTER
- PROPOSED SIDEWALK
- EXISTING SIDEWALK

PAVING & LANDSCAPE LEGEND

- STANDARD DUTY ASPHALT
- STANDARD DUTY CONCRETE
- ARTIFICIAL TURF - SEE LANDSCAPE PLANS
- PLAY SURFACE - SEE LANDSCAPE PLANS

SURVEYOR TO OBTAIN AUTOCAD FILE FROM ENGINEER AND VERIFY ALL HORIZONTAL CONTROL DIMENSIONING PRIOR TO CONSTRUCTION STAKING. SURVEYOR MUST VERIFY ALL BENCHMARK, BASIS OF BEARING AND DATUM INFORMATION TO ENSURE IMPROVEMENTS WILL BE AT THE SAME HORIZONTAL AND VERTICAL LOCATIONS SHOWN ON THE DESIGN CONSTRUCTION DRAWINGS. PRIOR TO CONSTRUCTION STAKING ANY DISCREPANCY MUST BE REPORTED TO OWNER AND ENGINEER PRIOR TO CONTINUATION OF ANY FURTHER STAKING OR CONSTRUCTION WORK.

NOTE: CONTRACTOR SHALL PROTECT ALL EXISTING SURVEY MONUMENTATION. CONTRACTOR SHALL HAVE LICENSED SURVEYOR REPLACE ANY DAMAGED OR DISTURBED MONUMENTATION AT THEIR COST.

CONTRACTOR IS RESPONSIBLE FOR PROVIDING ALL INFORMATION FOR FINAL ACCEPTANCE OF WORK FOR ANY LOCAL, STATE OR FEDERAL AGENCY, UTILITY DISTRICT OR ANY OTHER AGENCY OR DISTRICT HAVING APPROVAL AUTHORITY OVER WORK. THIS INFORMATION MAY INCLUDE, BUT IS NOT LIMITED TO, AS-BUILT PLANS, CERTIFICATIONS, INSPECTIONS AND REPORTS.

NOTE: CONTRACTOR MUST COORDINATE WORK WITH UTILITY COMPANY AND CITY PRIOR TO BEGINNING WORK AND IS RESPONSIBLE FOR ALL MATERIALS, LABOR, REPAIRS, PERMITS, ETC. TO COMPLETE WORK AND RESTORE AREA TO SAME STATE PRIOR TO STARTING WORK.

CAUTION - NOTICE TO CONTRACTOR

1. ALL UTILITY LOCATIONS SHOWN ARE BASED ON MAPS PROVIDED BY THE APPROPRIATE UTILITY COMPANY AND FIELD SURFACE EVIDENCE AT THE TIME OF SURVEY AND IS TO BE CONSIDERED AN APPROXIMATE LOCATION ONLY. IT IS THE CONTRACTOR'S RESPONSIBILITY TO FIELD VERIFY THE LOCATION OF ALL UTILITIES, PUBLIC OR PRIVATE, WHETHER SHOWN ON THE PLANS OR NOT, PRIOR TO CONSTRUCTION. REPORT ANY DISCREPANCIES TO THE ENGINEER PRIOR TO CONSTRUCTION.

Know what's below. Call before you dig.

2. WHERE A PROPOSED UTILITY CROSSES AN EXISTING UTILITY, IT IS THE CONTRACTOR'S RESPONSIBILITY TO FIELD VERIFY THE HORIZONTAL AND VERTICAL LOCATION AND SIZE OF SUCH EXISTING UTILITY, EITHER THROUGH POTHOLING OR ALTERNATIVE METHOD. REPORT INFORMATION TO THE ENGINEER PRIOR TO CONSTRUCTION.

MHTN ARCHITECTS
MHTN Architects, Inc.
280 South 400 West
Suite 250
Salt Lake City, Utah 84101
Telephone (801) 595-6700
www.mhtn.com

Galloway
172 N. East Promontory, Suite 274
Farmington, UT 84025
801.953.1357
GallowayUS.com

JORDAN SCHOOL DISTRICT

JORDAN LEARNING CENTER

3706 WEST 9800 SOUTH
SOUTH JORDAN, UT 84009

Confidentiality Notice:
This document is intended for use on the Project identified herein by individuals and companies involved in the design, permitting, bidding and construction of the Project. MHTN Architects, Inc. grants limited rights to distribute and reproduce this document for this express purpose only. Distribution, printing or copying this document for purposes other than those indicated is strictly prohibited. If a digital copy of this document is received in error, please delete it.

SEAL

REGISTERED PROFESSIONAL ENGINEER
No. 11432453-2202
DEVIN LUJAN
08/29/2024
STATE OF UTAH

MHTN PROJECT NO. 2024528

Original drawing is 30 x 42. Do not scale contents of this drawing.

REVISIONS
CONTRACTOR TO VERIFY DRAWINGS IN FIELD USE REFLECT LAST REVISION DATE.

NO.	DATE	DESCRIPTION

ISSUE
CONSTRUCTION DOCUMENTS
AUGUST 29, 2024

SHEET NAME
SITE PLAN

SHEET NUMBER
CS100

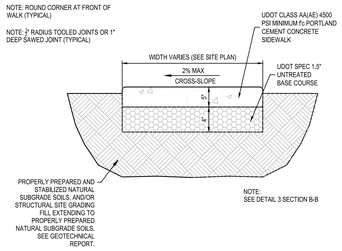

1 CONCRETE SIDEWALK
NOT TO SCALE

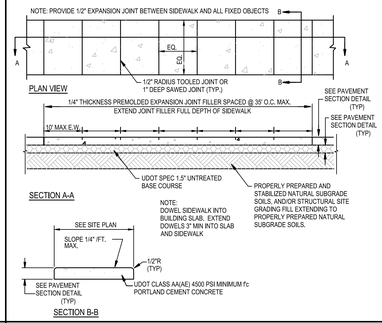

2 SITE EXTERIOR FLATWORK
NOT TO SCALE

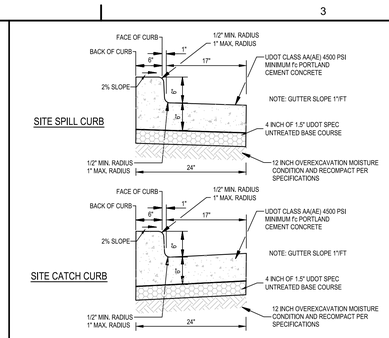

3 SITE CURB & GUTTER
NOT TO SCALE

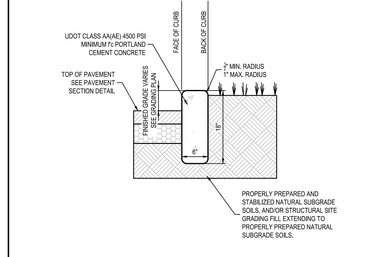

4 CURB WALL DETAIL
NOT TO SCALE

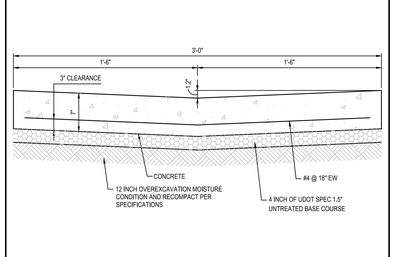

5 3' WATERWAY DETAIL
NOT TO SCALE

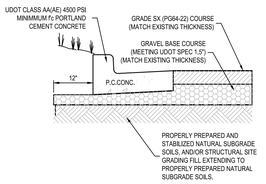

SITE STANDARD DUTY ASPHALT PAVING

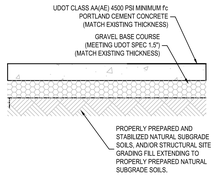

SITE CONCRETE PAVING

6 PAVEMENT SECTION(S)
NOT TO SCALE

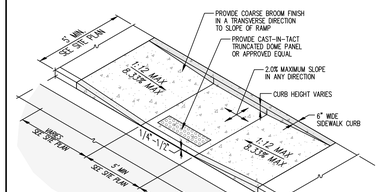

7 ADA RAMP DETAIL
NOT TO SCALE

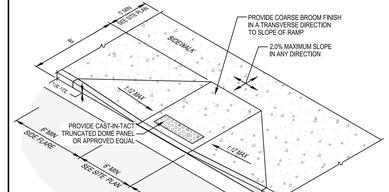

8 ADA RAMP DETAIL
NOT TO SCALE

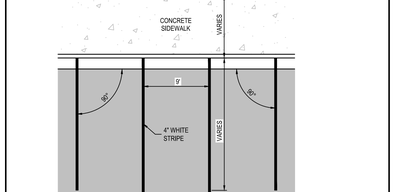

NOTES:
1. LENGTH OF STALL SHALL BE 18' MIN. WHERE ADJACENT SIDEWALK OR CLEAR SPACE IS 6' OR MORE. OTHERWISE LENGTH OF STALL SHALL BE 20'.
2. ALL STRIPING SHALL BE SHERWIN WILLIAMS TRAFFIC MARKING PAINT OR EQUIVALENT.

9 STANDARD PARKING DETAIL
NOT TO SCALE

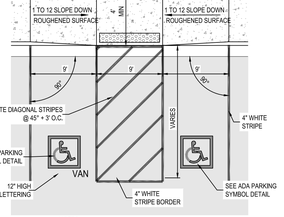

NOTES:
1. LENGTH OF STALL SHALL BE 18' MIN. WHERE ADJACENT SIDEWALK OR CLEAR SPACE IS 6' OR MORE. OTHERWISE LENGTH OF STALL SHALL BE 20'.
2. ALL STRIPING SHALL BE SHERWIN WILLIAMS TRAFFIC MARKING PAINT OR EQUIVALENT.
3. CONSTRUCT TRUNCATED DOMES IN PUBLIC ROW ONLY.

10 ADA PARKING DETAIL
NOT TO SCALE

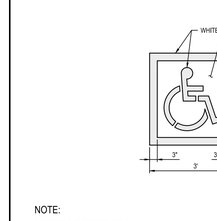

NOTE:
1. PROVIDE TWO COATS OF PAINT
2. BLUE BACKGROUND WITH WHITE SYMBOL

11 ADA SYMBOL DETAIL
NOT TO SCALE

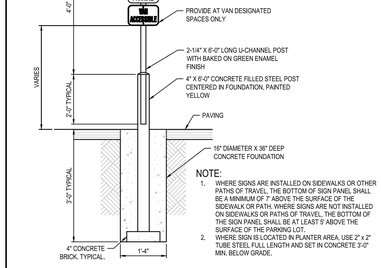

NOTE:
1. WHERE SIGNS ARE INSTALLED ON SIDEWALKS OR OTHER PATHS OF TRAVEL, THE BOTTOM OF SIGN PANEL SHALL BE A MINIMUM OF 7' ABOVE THE SURFACE OF THE SIDEWALK OR PATH. WHERE SIGNS ARE NOT INSTALLED ON SIDEWALKS OR PATHS OF TRAVEL, THE BOTTOM OF THE SIGN PANEL SHALL BE AT LEAST 5' ABOVE THE SURFACE OF THE PARKING LOT.
2. WHERE SIGN IS LOCATED IN PLANTER AREA, USE 2" x 2" TUBE STEEL FULL LENGTH AND SET IN CONCRETE 3'-0" MIN. BELOW GRADE.

12 ADA PARKING SIGN POST
NOT TO SCALE

MATERIAL: .060 ALUMINUM - WHITE BACKGROUND WITH BLUE COPY AND BORDER - SYMBOL HAS BLUE BACKGROUND, WHITE COPY WITH BLACK BORDER
1 1/2" RADIUS CORNERS WHITE 2 MOUNTING HOLES

13 ADA PARKING SIGN
NOT TO SCALE

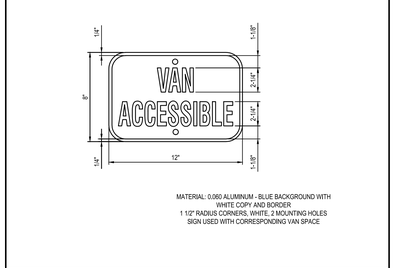

MATERIAL: 0.060 ALUMINUM - BLUE BACKGROUND WITH WHITE COPY AND BORDER
1 1/2" RADIUS CORNERS, WHITE, 2 MOUNTING HOLES
SIGN USED WITH CORRESPONDING VAN SPACE

14 "VAN ACCESSIBLE"SIGN
NOT TO SCALE

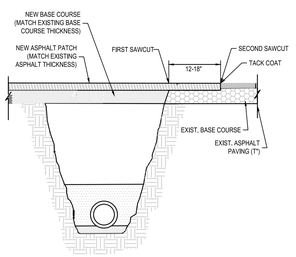

15 ASPHALT T-PATCH DETAIL
NOT TO SCALE

MHTN ARCHITECTS
MHTN Architects, Inc.
280 South 400 West
Suite 250
Salt Lake City, Utah 84101
Telephone (801) 595-6700
www.mhtn.com

Galloway
172 N. East Promontory, Suite 274
Farmington, UT 84025
801.553.1357
GallowayUS.com

JORDAN SCHOOL DISTRICT

JORDAN LEARNING CENTER
3706 WEST 9800 SOUTH
SOUTH JORDAN, UT 84009

Confidentiality Notice:
This document is intended for use on the Project identified herein by individuals and companies involved in the design, permitting, bidding and construction of the Project. MHTN Architects, Inc. grants limited rights to distribute and reproduce this document for this purpose only. Any other distribution, copying or reproduction of this document for purposes other than indicated is strictly prohibited. If a digital copy of this document is received in error, please delete it.

SEAL

REGISTERED PROFESSIONAL ENGINEER
No. 11435455-2202
DEVIN LUJAN
08/29/2024
STATE OF UTAH

MHTN PROJECT NO. 2024528

Original drawing is 30 x 42. Do not scale contents of this drawing.

REVISIONS
CONTRACTOR TO VERIFY DRAWINGS IN FIELD USE REFLECT LAST REVISION DATE.

NO.	DATE	DESCRIPTION
1		

ISSUE
CONSTRUCTION DOCUMENTS
AUGUST 29, 2024

SHEET NAME
SITE DETAILS

SHEET NUMBER
CS500

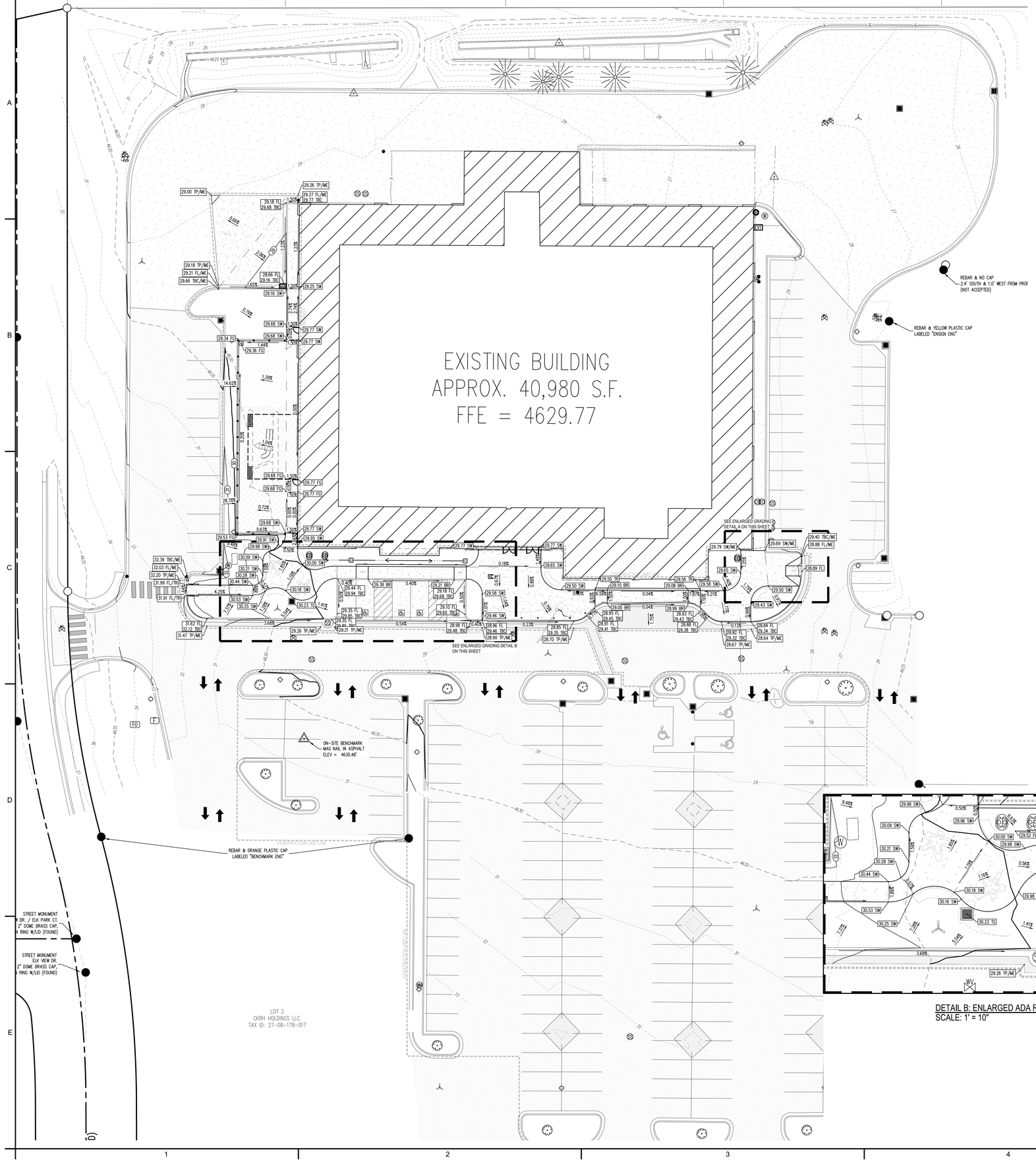

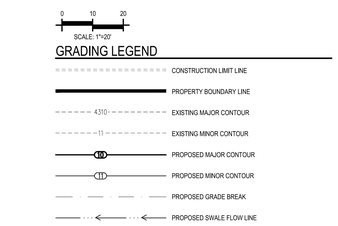

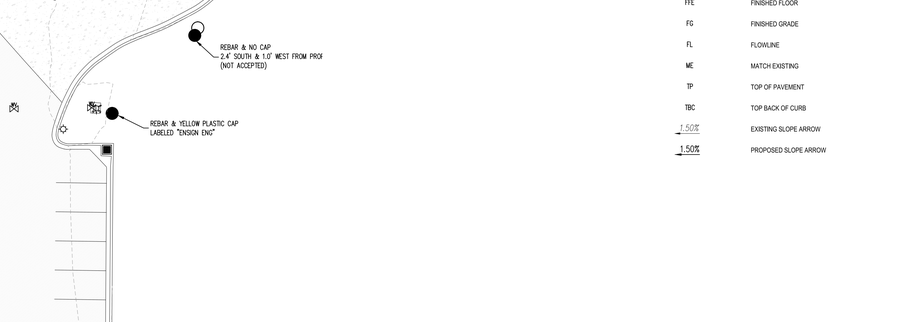

N

SCALE: 1"=20'

GRADING LEGEND

	CONSTRUCTION LIMIT LINE
	PROPERTY BOUNDARY LINE
4310	EXISTING MAJOR CONTOUR
11	EXISTING MINOR CONTOUR
10	PROPOSED MAJOR CONTOUR
11	PROPOSED MINOR CONTOUR
	PROPOSED GRADE BREAK
	PROPOSED SWALE FLOW LINE
15.00	PROPOSED SPOT ELEVATION
BR	BOTTOM OF RAMP
TR	TOP OF RAMP
FFE	FINISHED FLOOR
FG	FINISHED GRADE
FL	FLOWLINE
ME	MATCH EXISTING
TP	TOP OF PAVEMENT
TBC	TOP BACK OF CURB
1.50%	EXISTING SLOPE ARROW
1.50%	PROPOSED SLOPE ARROW

SURVEYOR TO OBTAIN AUTOCAD FILE FROM ENGINEER AND VERIFY ALL HORIZONTAL CONTROL DIMENSIONING PRIOR TO CONSTRUCTION STAKING. SURVEYOR MUST VERIFY ALL BENCHMARK, BASIS OF BEARING AND DATUM INFORMATION TO ENSURE IMPROVEMENTS WILL BE AT THE SAME HORIZONTAL AND VERTICAL LOCATIONS SHOWN ON THE DESIGN CONSTRUCTION DRAWINGS. PRIOR TO CONSTRUCTION STAKING ANY DISCREPANCY MUST BE REPORTED TO OWNER AND ENGINEER PRIOR TO CONTINUATION OF ANY FURTHER STAKING OR CONSTRUCTION WORK.

NOTE: CONTRACTOR SHALL PROTECT ALL EXISTING SURVEY MONUMENTATION. CONTRACTOR SHALL HAVE LICENSED SURVEYOR REPLACE ANY DAMAGED OR DISTURBED MONUMENTATION AT THEIR COST.

CONTRACTOR IS RESPONSIBLE FOR PROVIDING ALL INFORMATION FOR FINAL ACCEPTANCE OF WORK FOR ANY LOCAL, STATE OR FEDERAL AGENCY, UTILITY DISTRICT OR ANY OTHER AGENCY OR DISTRICT HAVING APPROVAL AUTHORITY OVER WORK. THIS INFORMATION MAY INCLUDE, BUT IS NOT LIMITED TO, AS-BUILT PLANS, CERTIFICATIONS, INSPECTIONS AND REPORTS.

NOTE: CONTRACTOR MUST COORDINATE WORK WITH UTILITY COMPANY AND CITY PRIOR TO BEGINNING WORK AND IS RESPONSIBLE FOR ALL MATERIALS, LABOR, REPAIRS, PERMITS, ETC. TO COMPLETE WORK AND RESTORE AREA TO SAME STATE PRIOR TO STARTING WORK.

CAUTION - NOTICE TO CONTRACTOR

1. ALL UTILITY LOCATIONS SHOWN ARE BASED ON MAPS PROVIDED BY THE APPROPRIATE UTILITY COMPANY AND FIELD SURFACE EVIDENCE AT THE TIME OF SURVEY AND IS TO BE CONSIDERED AN APPROXIMATE LOCATION ONLY. IT IS THE CONTRACTOR'S RESPONSIBILITY TO FIELD VERIFY THE LOCATION OF ALL UTILITIES, PUBLIC OR PRIVATE, WHETHER SHOWN ON THE PLANS OR NOT, PRIOR TO CONSTRUCTION. REPORT ANY DISCREPANCIES TO THE ENGINEER PRIOR TO CONSTRUCTION.
2. WHERE A PROPOSED UTILITY CROSSES AN EXISTING UTILITY, IT IS THE CONTRACTOR'S RESPONSIBILITY TO FIELD VERIFY THE HORIZONTAL AND VERTICAL LOCATION AND SIZE OF SUCH EXISTING UTILITY, EITHER THROUGH POTHOLING OR ALTERNATIVE METHOD. REPORT INFORMATION TO THE ENGINEER PRIOR TO CONSTRUCTION.

811 Know what's below. Call before you dig.

MHTN ARCHITECTS
MHTN Architects, Inc.
280 South 400 West
Suite 250
Salt Lake City, Utah 84101
Telephone (801) 595-6700
www.mhtn.com

Galloway
172 N. East Promontory, Suite 274
Farmington, UT 84025
801.953.1357
GallowayUS.com

JORDAN SCHOOL DISTRICT

JORDAN LEARNING CENTER

3706 WEST 9800 SOUTH
SOUTH JORDAN, UT 84009

Confidentiality Notice:
This document is intended for use on the Project identified herein by individuals and companies involved in the design, permitting, bidding and construction of the Project. MHTN Architects, Inc. grants limited rights to distribute and reproduce this document for this express purpose only. Distribution, printing or copying this document for purposes other than those indicated is strictly prohibited. If a digital copy of this document is received in error, please delete it.

SEAL

REGISTERED PROFESSIONAL ENGINEER
No. 11435455-2202
DEVIN LUJAN
08/29/2024
STATE OF UTAH

MHTN PROJECT NO. 2024528

Original drawing is 30 x 42. Do not scale contents of this drawing.

REVISIONS
CONTRACTOR TO VERIFY DRAWINGS IN FIELD USE REFLECT LAST REVISION DATE.

NO.	DATE	DESCRIPTION

ISSUE
CONSTRUCTION DOCUMENTS
AUGUST 29, 2024

SHEET NAME
GRADING PLAN

SHEET NUMBER
CG100

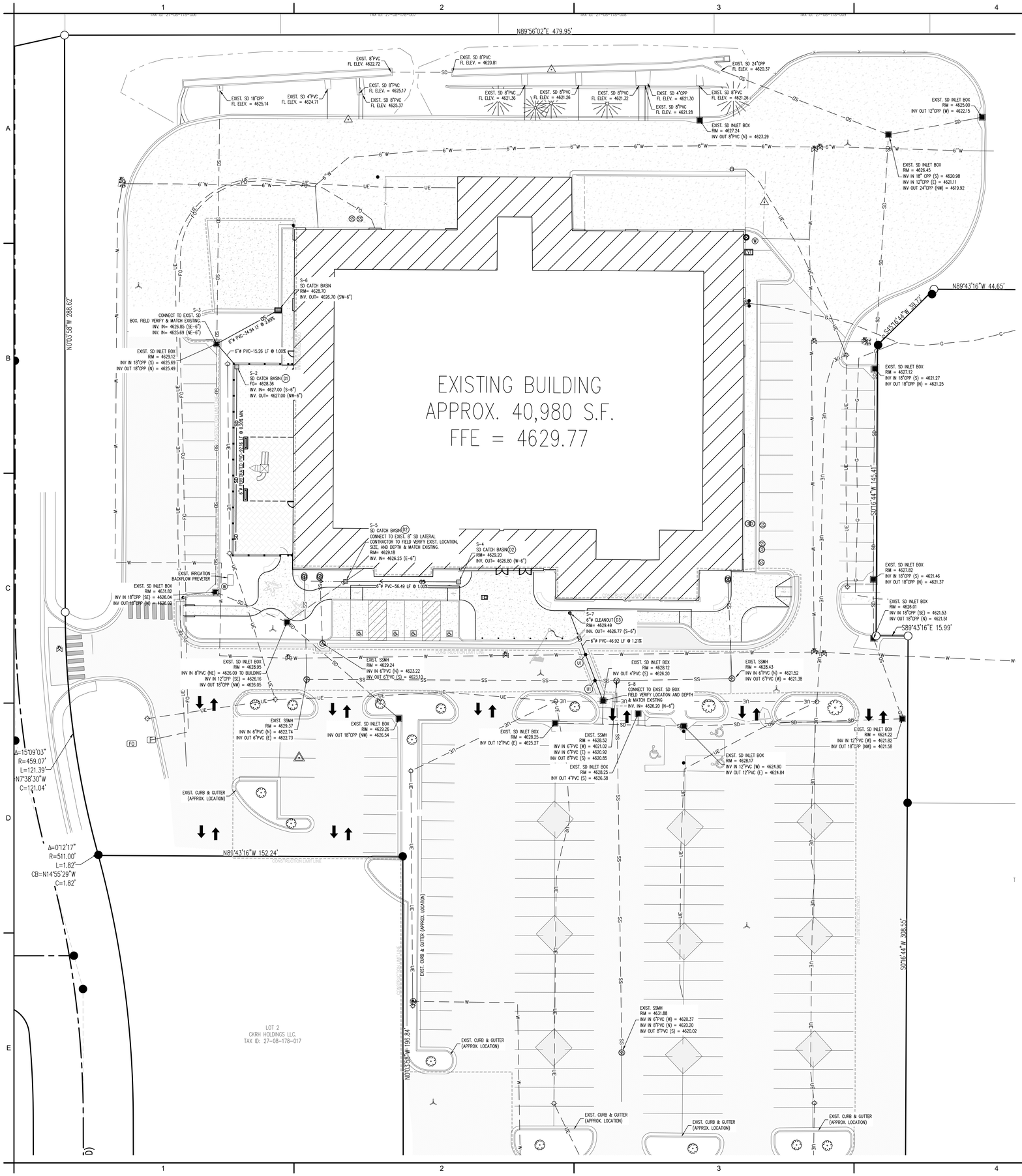

N

0 10 20

SCALE: 1"=20'

UTILITY LEGEND

- CONSTRUCTION LIMIT LINE
- PROPERTY BOUNDARY LINE
- EXISTING EASEMENT
- W — EXISTING WATER LINE
- SS — EXISTING SANITARY SEWER
- SD — EXISTING STORM DRAIN
- SD — PROPOSED STORM DRAIN (LESS THAN 12")
- G — EXISTING GAS
- UE — EXISTING UNDERGROUND POWER
- FO — EXISTING FIBER OPTIC LINE
- EXISTING ELECTRICAL VAULT
- EXISTING FIBER OPTICS BOX
- FO — EXISTING FIBER OPTICS PEDESTAL
- EXISTING LIGHT POLE
- EXISTING FIRE HYDRANT
- EXISTING WATER VALVE
- EXISTING WATER MANHOLE
- EXISTING SANITARY SEWER MANHOLE
- EXISTING STORM DRAIN BOX
- PROPOSED STORM DRAIN BOX
- EXISTING GAS METER

UTILITY KEYNOTES

(U1) EXISTING UTILITY CROSSING. CONTRACTOR TO POTHOLE AND FIELD VERIFY SIZE, LOCATION, & DEPTH PRIOR TO CONSTRUCTION START. NOTIFY ENGINEER OF CONFLICTS.

STORM DRAIN KEYNOTES

(D1) CONSTRUCT 2'X2' PRECAST CATCH BASIN PER APWA STD 332. SET RIM 1' BELOW FG AND WRAP GRATE IN NON-WOVEN FILTER FABRIC MIRAFI 140N OR BETTER PERMITTIVITY. A SECOND LAYER OF FABRIC SHALL BE PLACED OVER GRATES EXTENDING 12" IN ANY DIRECTION. SEE LANDSCAPE PLANS FOR PLAYGROUND SECTIONS & DETAILS.

(D2) 2'X2' PRECAST CATCH BASIN PER APWA STD 332.

(D3) PROPOSED ROOF DRAIN & 6"X4" REDUCER. SEE PLUMBING PLANS FOR CONTINUATION.

SURVEYOR TO OBTAIN AUTOCAD FILE FROM ENGINEER AND VERIFY ALL HORIZONTAL CONTROL DIMENSIONING PRIOR TO CONSTRUCTION STAKING. SURVEYOR MUST VERIFY ALL BENCHMARK, BASIS OF BEARING AND DATUM INFORMATION TO ENSURE IMPROVEMENTS WILL BE AT THE SAME HORIZONTAL AND VERTICAL LOCATIONS SHOWN ON THE DESIGN CONSTRUCTION DRAWINGS. PRIOR TO CONSTRUCTION STAKING ANY DISCREPANCY MUST BE REPORTED TO OWNER AND ENGINEER PRIOR TO CONTINUATION OF ANY FURTHER STAKING OR CONSTRUCTION WORK.

NOTE: CONTRACTOR SHALL PROTECT ALL EXISTING SURVEY MONUMENTATION. CONTRACTOR SHALL HAVE LICENSED SURVEYOR REPLACE ANY DAMAGED OR DISTURBED MONUMENTATION AT THEIR COST.

CONTRACTOR IS RESPONSIBLE FOR PROVIDING ALL INFORMATION FOR FINAL ACCEPTANCE OF WORK FOR ANY LOCAL, STATE OR FEDERAL AGENCY, UTILITY DISTRICT OR ANY OTHER AGENCY OR DISTRICT HAVING APPROVAL AUTHORITY OVER WORK. THIS INFORMATION MAY INCLUDE, BUT IS NOT LIMITED TO, AS-BUILT PLANS, CERTIFICATIONS, INSPECTIONS AND REPORTS.

NOTE: CONTRACTOR MUST COORDINATE WORK WITH UTILITY COMPANY AND CITY PRIOR TO BEGINNING WORK AND IS RESPONSIBLE FOR ALL MATERIALS, LABOR, REPAIRS, PERMITS, ETC. TO COMPLETE WORK AND RESTORE AREA TO SAME STATE PRIOR TO STARTING WORK.

CAUTION - NOTICE TO CONTRACTOR

1. ALL UTILITY LOCATIONS SHOWN ARE BASED ON MAPS PROVIDED BY THE APPROPRIATE UTILITY COMPANY AND FIELD SURFACE EVIDENCE AT THE TIME OF SURVEY AND IS TO BE CONSIDERED AN APPROXIMATE LOCATION ONLY. IT IS THE CONTRACTOR'S RESPONSIBILITY TO FIELD VERIFY THE LOCATION OF ALL UTILITIES, PUBLIC OR PRIVATE, WHETHER SHOWN ON THE PLANS OR NOT, PRIOR TO CONSTRUCTION. REPORT ANY DISCREPANCIES TO THE ENGINEER PRIOR TO CONSTRUCTION.
2. WHERE A PROPOSED UTILITY CROSSES AN EXISTING UTILITY, IT IS THE CONTRACTOR'S RESPONSIBILITY TO FIELD VERIFY THE HORIZONTAL AND VERTICAL LOCATION AND SIZE OF SUCH EXISTING UTILITY, EITHER THROUGH POTHOLING OR ALTERNATIVE METHOD. REPORT INFORMATION TO THE ENGINEER PRIOR TO CONSTRUCTION.

811 Know what's below. Call before you dig.

MHTN ARCHITECTS
MHTN Architects, Inc.
280 South 400 West
Suite 250
Salt Lake City, Utah 84101
Telephone (801) 595-6700
www.mhtn.com

Galloway
172 N. East Promontory, Suite 274
Farmington, UT 84025
801.953.1357
GallowayUS.com

JORDAN SCHOOL DISTRICT

JORDAN LEARNING CENTER

3706 WEST 9800 SOUTH
SOUTH JORDAN, UT 84009

Confidentiality Notice:
This document is intended for use on the Project identified herein by individuals and companies involved in the design, permitting, bidding and construction of the Project. MHTN Architects, Inc. grants limited rights to distribute and reproduce this document for this express purpose only. Distribution, printing or copying this document for purposes other than those indicated is strictly prohibited. If a digital copy of this document is received in error, please delete it.

SEAL

REGISTERED PROFESSIONAL ENGINEER
No. 11432453-2202
DEVIN LUJAN
08/29/2024
STATE OF UTAH

MHTN PROJECT NO. 2024528

Original drawing is 30 x 42. Do not scale contents of this drawing.

REVISIONS
CONTRACTOR TO VERIFY DRAWINGS IN FIELD USE REFLECT LAST REVISION DATE.

NO	DATE	DESCRIPTION

ISSUE
CONSTRUCTION DOCUMENTS
AUGUST 29, 2024

SHEET NAME
UTILITY PLAN

SHEET NUMBER
CU100

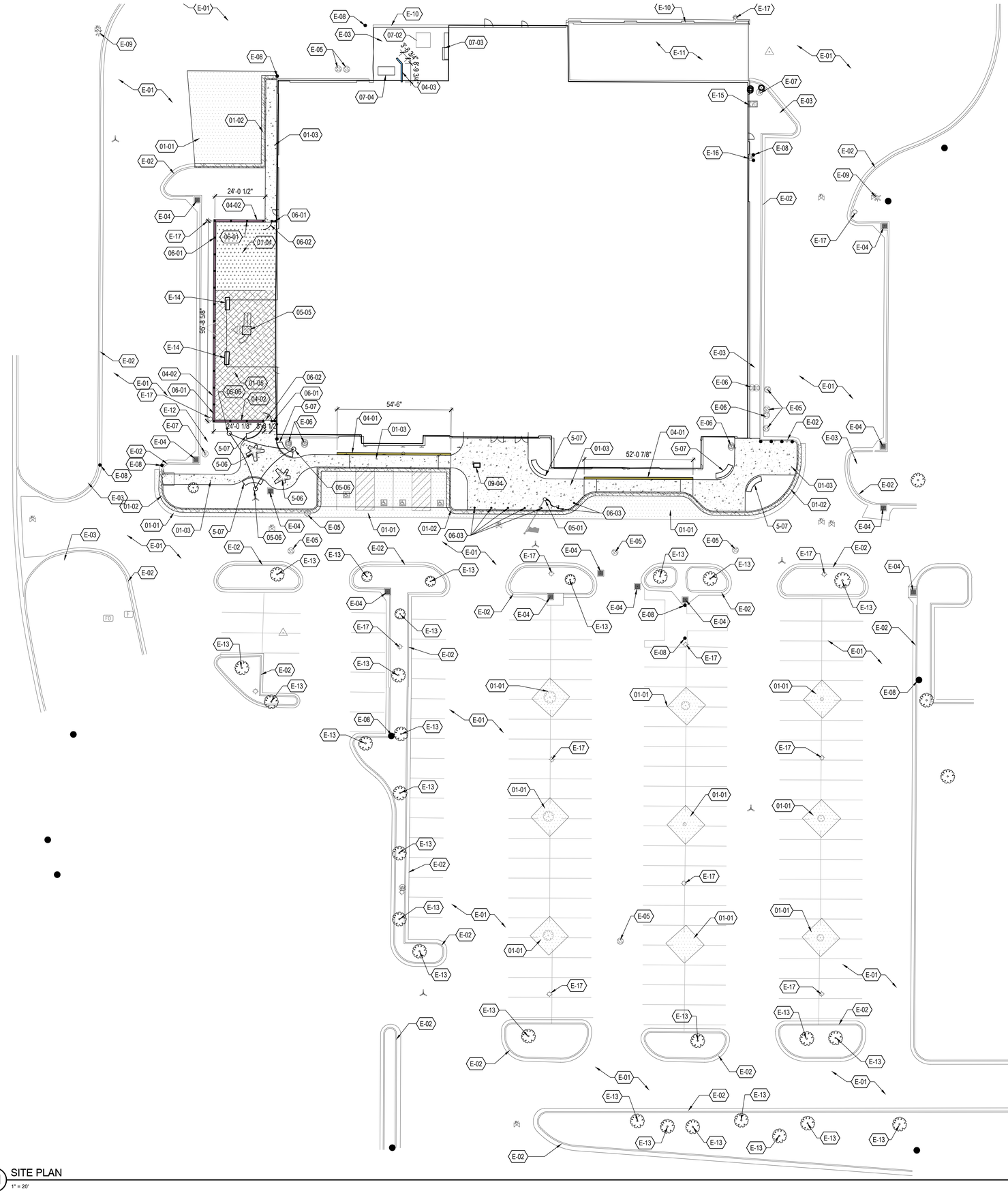

REFERENCE NOTES SCHEDULE				
SYMBOL	CODE	DESCRIPTION	DETAIL	
	2	*RELIANCE FOUNDARY BOLLARD*		
01 PAVEMENTS, RAMPS, CURBS				
SYMBOL	CODE	DESCRIPTION	DETAIL	RELATED DETAILS
	01-01	*ASPHALT PAVING - SEE CIVIL*		*321216*
	01-02	*CONCRETE CURB AND GUTTER - SEE CIVIL*		*321613*
	01-03	*CONCRETE PAVING - SEE CIVIL*		*321300*
	01-04	*SYNTHETIC GRASS SURFACING*		*321800*
	01-05	*PLAYGROUND PROTECTIVE SURFACING*	*B2/AS501*	*321800*
04 WALLS AND EMBANKMENTS				
SYMBOL	CODE	DESCRIPTION	DETAIL	SPECIFICATION
	04-01	*CONCRETE SEAT WALL*	*C1/AS501*	*033100*
	04-02	*12" WIDE CONCRETE PLAYGROUND CURB WALL*	*C2/AS501*	
	04-03	*CMU BLAST WALL*	*B5/AS501*	
05 SITE FURNISHINGS				
	05-01	*FLAG POLE*	*B3/AS501*	*107500*
	05-05	*PLAYGROUND EQUIPMENT - SEE SPECIFICATIONS*		
	05-06	*FABRIC SHADE STRUCTURES - SEE SPECIFICATIONS*		
06 RAILINGS, BARRIERS, FENCING				
	06-01	*ORNAMENTAL FENCE*	*A3/AS501*	*323100*
	06-02	*ORNAMENTAL SWING GATE WITH PANIC HARDWARE*	*A1/AS501*	*323100*
	06-03	*STEEL BOLLARD WITH BOLLARD COVER*		*323900*
07 SITE LIGHTING				
SYMBOL	CODE	DESCRIPTION	DETAIL	
	07-02	*TRANSFORMER - SEE ELECTRICAL*		
	07-03	*SWITCH GEAR - SEE ELECTRICAL*		
	07-04	*GENERATOR - SEE ELECTRICAL*		
09 LANDSCAPE AND IRRIGATION				
	09-04	*BUILDING COLUMN - SEE ARCHITECTURAL DRAWINGS*		
5 SITE FURNISHINGS				
	5-06	*LANDSCAPE FORMS FLOR-LG REINFORCED CAST STONE BENCH. W/ RADIAL BIOMORPHIC DESIGN. 106" X 97" X 17". BENCH: WHITE CAST STONE*		
	5-07	*LANDSCAPE FORMS HEBI-C-SLD REINFORCED CAST STONE BACKLESS BENCH. CURVED AND SOLID FORM. 120" LENGTH. BENCH: WHITE CAST STONE*		
EXISTING				
	E-01	*ASPHALT PAVING - SEE CIVIL*		
	E-02	*CURB AND GUTTER - SEE CIVIL*		
	E-03	*CONCRETE SIDE WALK*		
	E-04	*CATCH BASIN*		
	E-05	*SANITARY SEWER*		
	E-06	*CLEANOUT*		
	E-07	*WATER METER*		
	E-08	*STEEL BOLLARD*		
	E-09	*FIRE HYDRANT*		
	E-10	*CMU SCREEN WALL*		
	E-11	*TRUCK DOCK*		
	E-12	*IRRIGATION BACKFLOW PREVENTER. TO BE PROTECTED*		
	E-13	*TREE - TO BE PROTECTED*		
	E-14	*BUILDING COLUMN*		
	E-15	*ELECTRICAL EQUIPMENT - SEE ELECTRICAL*		
	E-16	*GAS METER*		
	E-17	*LIGHT POLE - SEE ELECTRICAL*		

E1 SITE PLAN
1" = 20'

MHTN ARCHITECTS
MHTN Architects, Inc.
280 South 400 West
Suite 250
Salt Lake City, Utah 84101
Telephone (801) 595-6700
www.mhtn.com

JORDAN SCHOOL DISTRICT

JORDAN LEARNING CENTER

3706 WEST 9800 SOUTH
SOUTH JORDAN, UT 84009

©2023 MHTN ARCHITECTS, INC.
Confidentiality Notice:
This document is intended for use on the Project identified herein by individuals and companies involved in the design, permitting, bidding and construction of the Project. MHTN Architects, Inc. grants limited rights to distribute and reproduce this document for this express purpose only. Distribution, printing or copying this document for purposes other than those indicated is strictly prohibited. If a digital copy of this document is received in error, please delete it.

SEAL

STATE OF UTAH
VINCENT RULON OLCOTT
No. 4812885
8-29-2024
LICENSED LANDSCAPE ARCHITECT

MHTN PROJECT NO. 2024528

Original drawing is 30 x 42. Do not scale contents of this drawing.

REVISIONS
CONTRACTOR TO VERIFY DRAWINGS IN FIELD USE REFLECT LAST REVISION DATE.

NO.	DATE	DESCRIPTION

ISSUE
CONSTRUCTION DOCUMENTS
AUGUST 29, 2024

SHEET NAME
ENLARGED SITE PLAN

SHEET NUMBER
AS101

Autodesk Docs://2024528 JSD Retail Remodel/A24 2024528 JSD Retail Remodel.rvt
8/27/2024 10:21:33 AM

VIEW-37219852

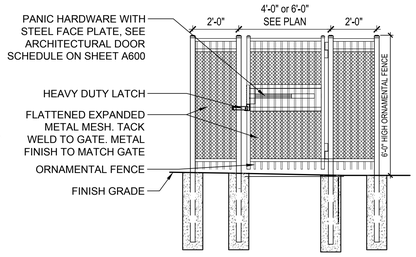

A1 ORNAMENTAL GATE WITH PANIC HARDWARE
3/8" = 1'-0" JSD-JS-323119-12

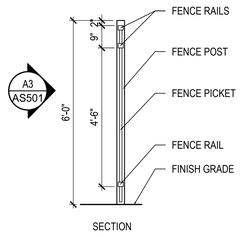

A2 DECORATIVE METAL FENCE SECTION
1/2" = 1'-0" JSD-JS-323119-18

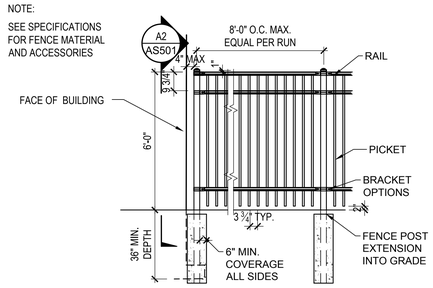

A3 DECORATIVE METAL FENCE
3/8" = 1'-0" JSD-JS-323119-02

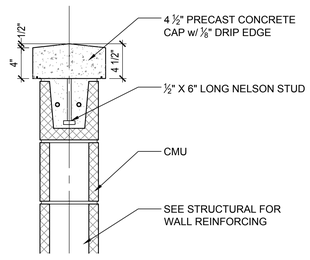

A4 DUMPSTER WALL CAP
1 1/2" = 1'-0" JSD-JS-042263-05

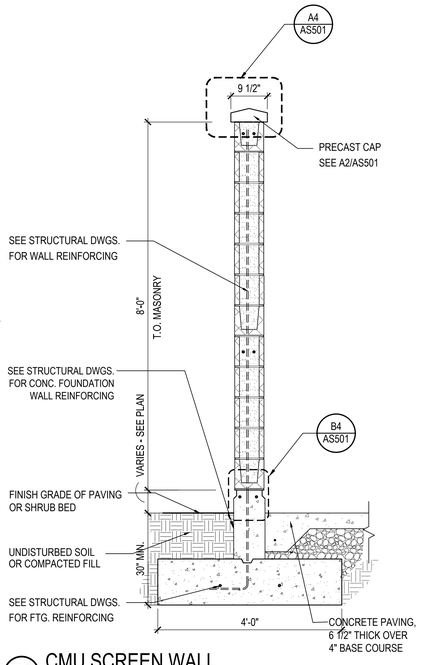

B5 CMU SCREEN WALL
3/4" = 1'-0" JSD-JS-042263-01

C1 12" CONCRETE SEAT WALL
1" = 1'-0" JSD-JS-323213-01

B2 PLAYGROUND SYNTH TURF FALL ZONE
3/4" = 1'-0" JSD-JS-321139-01

B3 FLAG POLE
1/2" = 1'-0" JSD-JS-324013-02

B4 CONCRETE REVEAL DETAIL
3" = 1'-0" JSD-JS-042263-06

C2 POURED-IN-PLACE PLAYGROUND SURFACE
3/4" = 1'-0" JSD-JS-033366-01

MHTN
ARCHITECTS
MHTN Architects, Inc.
280 South 400 West
Suite 250
Salt Lake City, Utah 84101
Telephone (801) 595-6700
www.mhtn.com

JORDAN SCHOOL DISTRICT

JORDAN LEARNING CENTER

3706 WEST 9800 SOUTH
SOUTH JORDAN, UT 84009

©2023 MHTN ARCHITECTS, INC.

Confidentiality Notice:
This document is intended for use on the Project identified herein by individuals and companies involved in the design, permitting, bidding and construction of the Project. MHTN Architects, Inc. grants limited rights to distribute and reproduce this document for this express purpose only. Distribution, printing or copying this document for purposes other than those indicated is strictly prohibited. If a digital copy of this document is received in error, please delete it.

SEAL

STATE OF UTAH
VINCENT RULON OLCOTT
No. 4812885
08-29-2024
LICENSED LANDSCAPE ARCHITECT

MHTN PROJECT NO. 2024528

Original drawing is 30 x 42. Do not scale contents of this drawing.

REVISIONS
CONTRACTOR TO VERIFY DRAWINGS IN FIELD USE REFLECT LAST REVISION DATE.

NO.	DATE	DESCRIPTION

ISSUE
CONSTRUCTION DOCUMENTS
AUGUST 29, 2024

SHEET NAME
SITE DETAILS

SHEET NUMBER
AS501

Autodesk Docs://2024528 JSD Retail Remodel/A24 2024528 JSD Retail Remodel.rvt
8/27/2024 10:21:33 AM

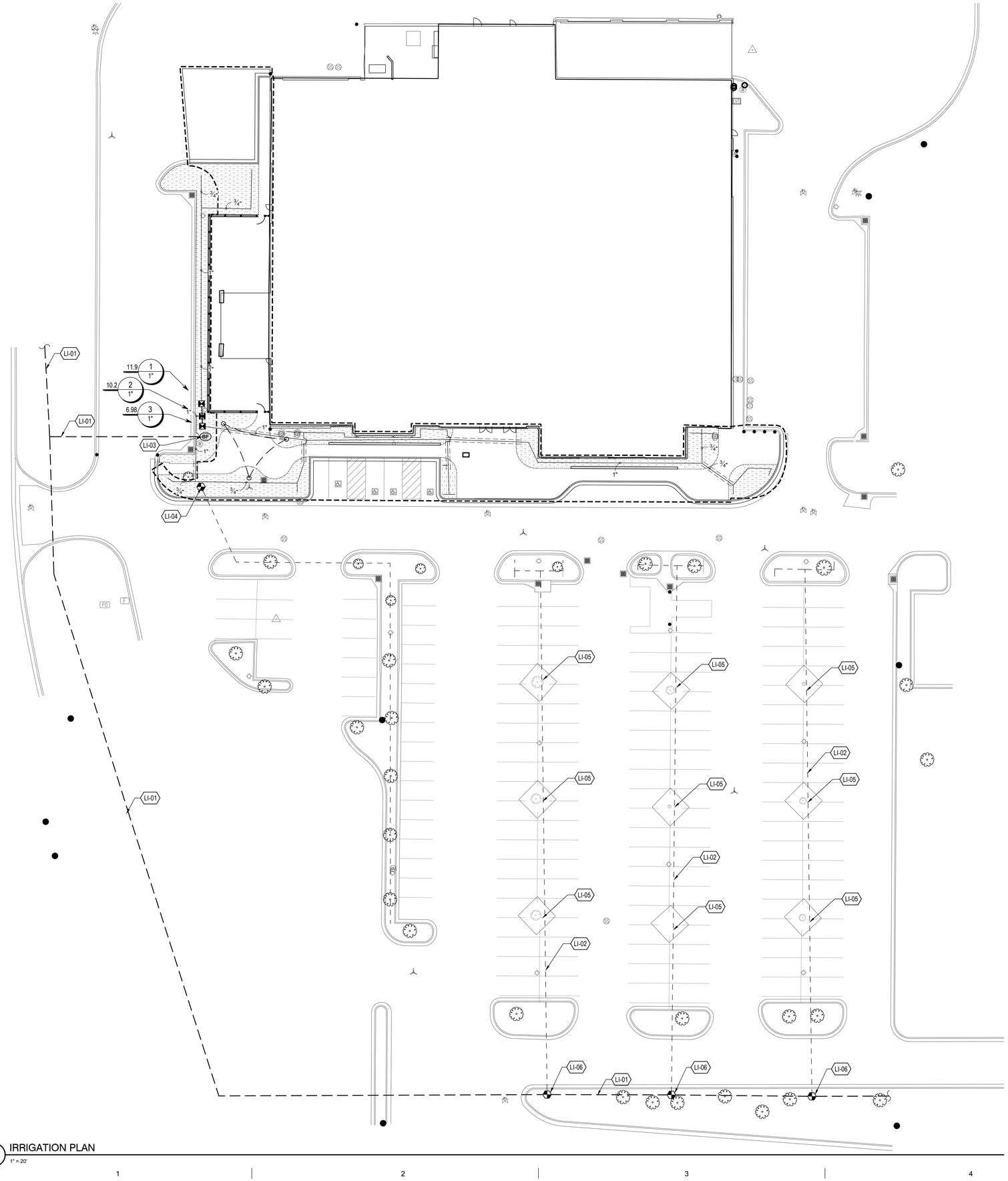

E1 IRRIGATION PLAN
1" = 20'

IRRIGATION SCHEDULE

SYMBOL	MANUFACTURER/MODEL/DESCRIPTION
	RAIN BIRD XCZ-100-PRB-COM WIDE FLOW DRIP CONTROL KIT FOR COMMERCIAL APPLICATIONS. 1IN. BALL VALVE WITH 1IN. PESB VALVE AND 1IN. PRESSURE REGULATING 40PSI QUICK-CHECK BASKET FILTER. 5 GPM-20 GPM.
	AREA TO RECEIVE DRIPLINE NETAFIM TLCV-06-18 TECHLINE PRESSURE COMPENSATING LANDSCAPE DRIPLINE WITH CHECK VALVE. 0.6 GPH EMITTERS AT 18" O.C. DRIPLINE LATERALS SPACED AT 18" APART, WITH EMITTERS OFFSET FOR TRIANGULAR PATTERN. 17MM.

SYMBOL	MANUFACTURER/MODEL/DESCRIPTION
	EXISTING REMOTE CONTROL VALVE PROTECT AND REUSE EXISTING VALVE. CONTRACTOR TO VERIFY CONDITION.
BF	EXISTING BACKFLOW PREVENTER 2" BACKFLOW PREVENTER SHALL BE PROTECTED AND PRESERVED
	IRRIGATION LATERAL LINE: PVC SCHEDULE 40
	IRRIGATION LATERAL LINE: PVC CLASS 200
	IRRIGATION MAINLINE: PVC SCHEDULE 40 SCHEDULE 40 PVC PIPE WITH SCHEDULE 40 FITTINGS
	PIPE SLEEVE: PVC CLASS 200 SDR 21

Valve Callout
Valve Number
Valve Flow
Valve Size

KEY NOTES

IRRIGATION

CODE	DESCRIPTION
LI-01	EXISTING IRRIGATIONMAINLINE. CONTRACTOR TO LOCATE AND VERIFY.
LI-02	EXISTING IRRIGATION LATERAL LINE. CONTRACTOR TO LOCATE AND VERIFY.
LI-03	EXISTING BACKFLOW PREVENTER TO BE PROTECTED AND PRESERVED.
LI-04	EXISTING ZONE VALVE. CONTRACTOR TO VERIFY AND RELOCATE AS REQUIRED.
LI-05	CONNECT EXISTING LATERAL LINES AND REMOVE EXISTING DRIP LINES.
LI-06	EXISTING ZONE VALVE. CONTRACTOR TO LOCATE AND VERIFY

MHTN
ARCHITECTS
MHTN Architects, Inc.
280 South 400 West
Suite 250
Salt Lake City, Utah 84101
Telephone (801) 595-6700
www.mhtn.com

JORDAN SCHOOL DISTRICT

JORDAN LEARNING CENTER

3706 WEST 9800 SOUTH
SOUTH JORDAN, UT 84009

©2023 MHTN ARCHITECTS, INC.

Confidentiality Notice:
This document is intended for use on the Project identified herein by individuals and companies involved in the design, permitting, bidding and construction of the Project. MHTN Architects, Inc. grants limited rights to distribute and reproduce this document for this express purpose only. Distribution, printing or copying this document for purposes other than those indicated is strictly prohibited. If a digital copy of this document is received in error, please delete it.

SEAL

STATE OF UTAH
VINCENT RULON OLCOTT
No. 4812865
08-29-2024
LICENSED LANDSCAPE ARCHITECT

MHTN PROJECT NO. 2024528

Original drawing is 30 x 42. Do not scale contents of this drawing.

REVISIONS
CONTRACTOR TO VERIFY DRAWINGS IN FIELD USE REFLECT LAST REVISION DATE.

NO.	DATE	DESCRIPTION

ISSUE
CONSTRUCTION DOCUMENTS
AUGUST 29, 2024

SHEET NAME
IRRIGATION PLAN

SHEET NUMBER
LI101

Autodesk Docs://2024528 JSD Retail Remodel/A24 2024528 JSD Retail Remodel.rvt
8/27/2024 10:21:33 AM

IRRIGATION NOTES

ALL MAIN LINE PIPE SHALL BE NEW SCHEDULE 40 PVC PIPE WITH DEEP SOCKET FITTINGS ON ALL 3" TEES, ELBOWS AND 90'S. ALL LATERAL LINE PIPE SHALL BE SCHEDULE 40 PVC PIPE. FITTINGS ON ALL LATERAL LINES SHALL BE SCHEDULE 40 FITTINGS.

ALL GALVANIZED PIPE ON DETAILS SHALL BE NEW GALVANIZED STEEL PIPE.

LIVE SERVICE MAINS SHALL BE INSTALLED A MINIMUM OF 18" BELOW FINISH GRADE. BACKFILL TRENCH AROUND LIVE SERVICE MAIN WITH A MINIMUM OF 8" OF SAND. LATERAL LINES SHALL BE PLACED A MINIMUM OF 12" BELOW FINISH GRADE.

ALL MAIN LINES SHALL SLOPE TO DRAIN. IF FIELD CONDITIONS NECESSITATE ADDITIONAL DRAINS, THESE DRAINS SHALL BE INSTALLED FOR COMPLETE DRAINAGE OF THE ENTIRE MAINLINE. PROVIDE A 24" DIA. X 24" DEEP GRAVEL SUMP UNDER EACH DRAIN, WHICH DRAIN SHALL BE A MIN. OF 24" BELOW GRADE. ALL MANUAL DRAIN VALVES SHALL BE INSTALLED AS DETAILED ON THE DRAWINGS. INSTALL GEO-TEXTILE FABRIC AROUND EACH GRAVEL DRAIN.

THIS CONTRACTOR SHALL PROVIDE AND INSTALL AIR RELIEF VALVES ON THE MAINLINE AT ALL DEAD END RUNS AND AT ALL HIGH POINTS THROUGHOUT.

THE CONTRACTOR SHALL PRESSURE TEST THE MAINLINE AT 150 P.S.I. PRIOR TO INSTALLING ANY LATERAL LINES.

IRRIGATION SYSTEM IS DESIGNED SO THAT THE SYSTEM CAN BE WINTERIZED USING COMPRESSED AIR. DO NOT INSTALL AUTOMATIC DRAINS ANYWHERE ON THE SYSTEM.

THIS CONTRACTOR SHALL PROVIDE RECORD DRAWINGS OF THE IRRIGATION SPRINKLER SYSTEM IN CAD FORMAT SHOWING EXACT MEASURED AND DIMENSIONED LOCATIONS OF ALL VALVES, WIRE SPLICES NOT IN A VALVE BOX AND OTHER IRRIGATION EQUIPMENT. SEE SPECIFICATIONS. TIE DIMENSIONS TO PERMANENT FEATURES SUCH AS STRUCTURES.

THIS DRAWING IS DIAGRAMMATIC ONLY AND IS INTENDED TO CONVEY THE IDEA OF FULL COVERAGE OF THE IRRIGATION SPRINKLER SYSTEM. PRINTS SHALL NOT BE SCALED. THE IRRIGATION SYSTEM CONTRACTOR SHALL BE RESPONSIBLE FOR THE INSTALLATION LAYOUT OF THE SYSTEM IN ACCORDANCE WITH THE DRAWINGS TO PROPORTIONALLY COVER A GIVEN AREA AS SHOWN. THE LAYOUT MAY BE MODIFIED IF NECESSARY TO OBTAIN COVERAGE TO SUIT THE MANUFACTURERS STANDARD HEADS INDICATED. DO NOT DECREASE THE NUMBER OF HEADS INDICATED UNLESS THIS IS ACCEPTABLE TO THE LANDSCAPE ARCHITECT. THE SYSTEM SHALL BE TESTED FOR COMPLETE COVERAGE AND ALL NECESSARY PROPER ADJUSTMENTS MADE TO GET FULL AND PROPER COVERAGE PRIOR TO ACCEPTANCE BY THE OWNER.

WIRE SPLICES AND DRAIN VALVES NOT IN CONTROL VALVE VALVE BOXES. SHALL BE IN 10" ROUND VALVE BOXES.

ALL VALVES TO BE WIRED TO CONTROLLERS USING MULTI-STRAND. WIRE AND PEN-TITE WATER RESISTANT WIRE CONNECTORS. ALL VALVE WIRES UNDER PAVING SHALL BE INSTALLED IN A MINIMUM 2" SCHEDULE 40 PVC CONDUIT BURIED 24" DEEP. PROVIDE AND INSTALL A DIFFERENT COLOR VALVE WIRE FOR EACH CONTROLLER. RUN THREE EXTRA REQUIRED TWO HOT (BLUE COLOR) AND ONE COMMON WIRE (WHITE COLOR) . EXTRA WIRE FROM THE ADJACENT CONTROLLER TO EACH GROUP OF VALVES FOR FUTURE USE AND STUB INTO THE VALVE BOX.

ALL VALVE BOXES SHALL BE JUMBO SIZED PLASTIC BOXES, AMETEC OR EQUAL UNLESS OTHERWISE DETAILED.

ALL VALVES WILL BE LOCATED IN GROUPS 3' AWAY FROM WALKS AND CURBS-COORDINATE WITH MAINLINE LAYOUT. A DRAIN VALVE WITH SUMP SHALL BE PROVIDED AND INSTALLED AT EACH GROUP OF VALVES. A QUICK COUPLER SHALL BE PROVIDED AT EVERY VALVE MANIFOLD LOCATION. VALVES SHALL BE LOCATED 3'-0" AWAY FROM THE CURBS, WALKS OR MOWSTRIP.

A MAXIMUM OF FOUR VALVES SHALL BE INSTALLED ON EACH VALVE MANIFOLD OR MAIN LINE TEE. ALL MAINLINE MANIFOLD TEES SHALL HAVE A 4" MINIMUM OUTLET.

THIS CONTRACTOR SHALL BE RESPONSIBLE FOR REPAIRING ANY SITE ITEMS DAMAGED DURING THE COURSE OF CONSTRUCTION.

IRRIGATION PRODUCT SUBMITTALS SHALL INCLUDE PIPE SLEEVING,CONDUIT, AND ASSOCIATED COMPONENTS

THIS CONTRACTOR SHALL BE RESPONSIBLE TO PROTECT ALL THE EXISTING TREES AND MINIMIZE DAMAGE TO ALL TREE ROOTS. INSTALL LATERALS TO HEADS IN A MANNER TO MINIMIZE ROOT DAMAGE TO ALL EXISTING TREES.

IRRIGATION REMODEL NOTES

THIS CONTRACTOR SHALL BE RESPONSIBLE FOR FIELD VERIFICATION OF THE EXISTING SPRINKLER IRRIGATION SYSTEM IN TERMS OF FLOW CAPACITY, VALVE WIRING, VALVE AND HEAD LAYOUT AND CONTROLLER CAPACITY.

THIS CONTRACTOR SHALL BE RESPONSIBLE FOR THE COMPLETE REMODEL OF A SECTION OF THE EXISTING IRRIGATION SYSTEM AS SHOWN AND FOR PROVIDING FOR FULL COVERAGE OF ALL SYSTEM HEADS AND FOR THE FULL AND COMPLETE OPERATION OF BOTH THE NEW AND EXISTING SYSTEM IN THE AREAS BEING MODIFIED INCLUDING AREAS ADJACENT TO THE SITE

THIS CONTRACTOR SHALL COORDINATE ALL DEMOLITION WORK AND TIMES WITH THE OWNER.

MAINTAIN AND PROTECT AS MUCH OF THE EXISTING IRRIGATION SYSTEM AS POSSIBLE AND FEASIBLE AND STILL PROVIDE FOR FULL COVERAGE OF THE ENTIRE AREA. KEEP ALL LAWN AREA HEADS ON A SEPARATE CIRCUIT FROM SHRUB AREA HEADS.

THE EXISTING IRRIGATION SYSTEMS NOTED TO REMAIN IN USE SHALL BE PATCHED AND REPAIRED AS NECESSARY. MAINTAIN OPERATION OF THE EXISTING SYSTEM AS REQUIRED TO PROTECT EXISTING PLANT MATERIAL. CONTRACTOR SHALL BE RESPONSIBLE FOR DAMAGE OR DEATH OF EXISTING PLANT MATERIAL.

ALL SALVAGED HEADS SHALL BE RETURNED TO THE OWNER.

THIS CONTRACTOR SHALL BE RESPONSIBLE FOR PROTECTING THE EXISTING VALVE WIRING AND RE-ROUTING AS SHOWN AND AS REQUIRED. MINIMIZE THE USE OF WIRE SPLICES. PROVIDE TEMPORARY WIRING AS REQUIRED TO KEEP THE EXISTING SYSTEM IN OPERATION.

REPAIR DAMAGE TO EXISTING IRRIGATION SYSTEM AND LAWN RESULTING FROM CONSTRUCTION OPERATIONS.

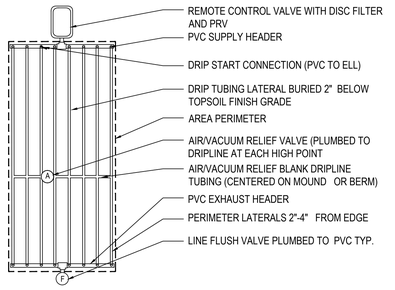

A3 TYPICAL DRIP LAYOUT
1" = 1" JSD-JS-328413-10

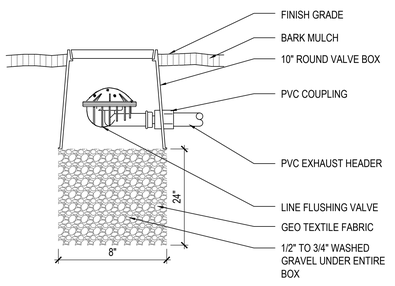

A4 DRIP FLUSH VALVE
1" = 1" JSD-JS-328413-02

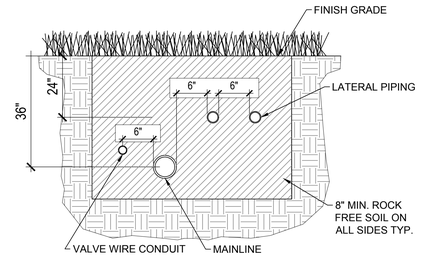

A5 TRENCH DETAIL TYP.
NTS JSD-JS-328409-16

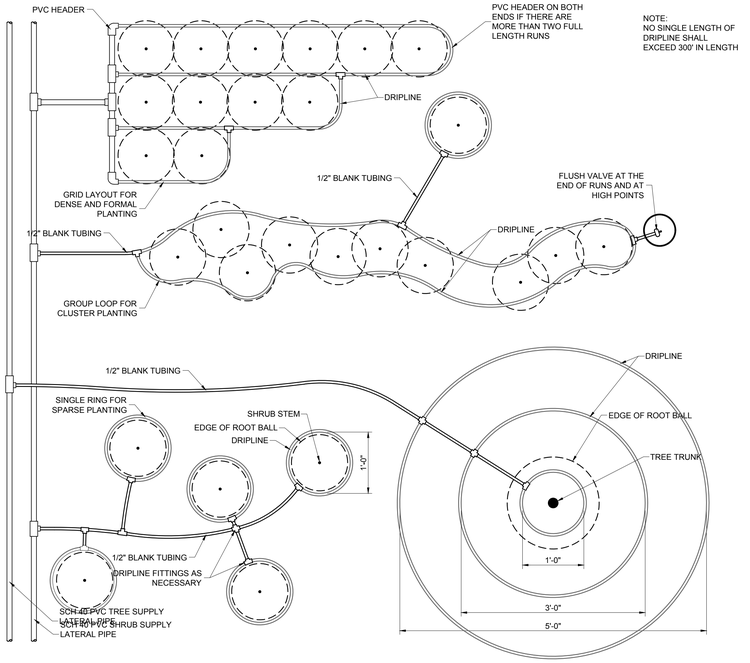

C3 DRIPLINE LAYOUT AT TREES AND SHRUBS
1" = 1'-0" JSD-JS-328413-03

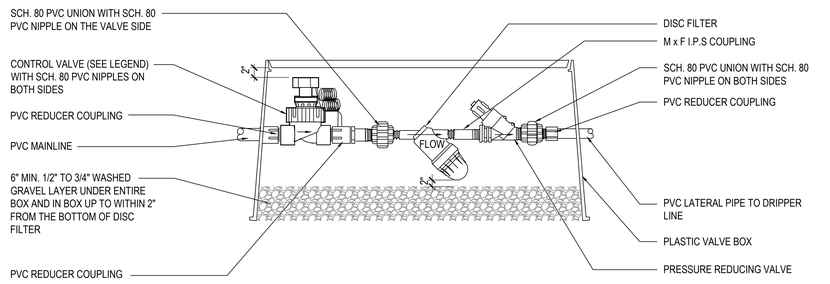

D3 CONTROL VALVE - DRIP SYSTEM
1" = 1" JSD-JS-328413-01 JSD-~~JS-328413-01~~

MHTN ARCHITECTS
MHTN Architects, Inc.
280 South 400 West
Suite 250
Salt Lake City, Utah 84101
Telephone (801) 595-6700
www.mhtn.com

JORDAN SCHOOL DISTRICT

JORDAN LEARNING CENTER
3706 WEST 9800 SOUTH
SOUTH JORDAN, UT 84009

©2023 MHTN ARCHITECTS, INC.
Confidentiality Notice:
This document is intended for use on the Project identified herein by individuals and companies involved in the design, permitting, bidding and construction of the Project. MHTN Architects, Inc. grants limited rights to distribute and reproduce this document for this express purpose only. Distribution, printing or copying this document for purposes other than those indicated is strictly prohibited. If a digital copy of this document is received in error, please delete it.

SEAL

STATE OF UTAH
VINCENT RULON OLCOTT
No. 4812865
08-29-2024
LICENSED LANDSCAPE ARCHITECT

MHTN PROJECT NO. 2024528

Original drawing is 30 x 42. Do not scale contents of this drawing.

REVISIONS
CONTRACTOR TO VERIFY DRAWINGS IN FIELD USE REFLECT LAST REVISION DATE.

NO.	DATE	DESCRIPTION

ISSUE
CONSTRUCTION DOCUMENTS
AUGUST 29, 2024

SHEET NAME
IRRIGATION DETAILS AND NOTES

SHEET NUMBER
LI501

Autodesk Docs://2024528 JSD Retail Remodel/A24 2024528 JSD Retail Remodel.rvt
8/27/2024 10:21:33 AM

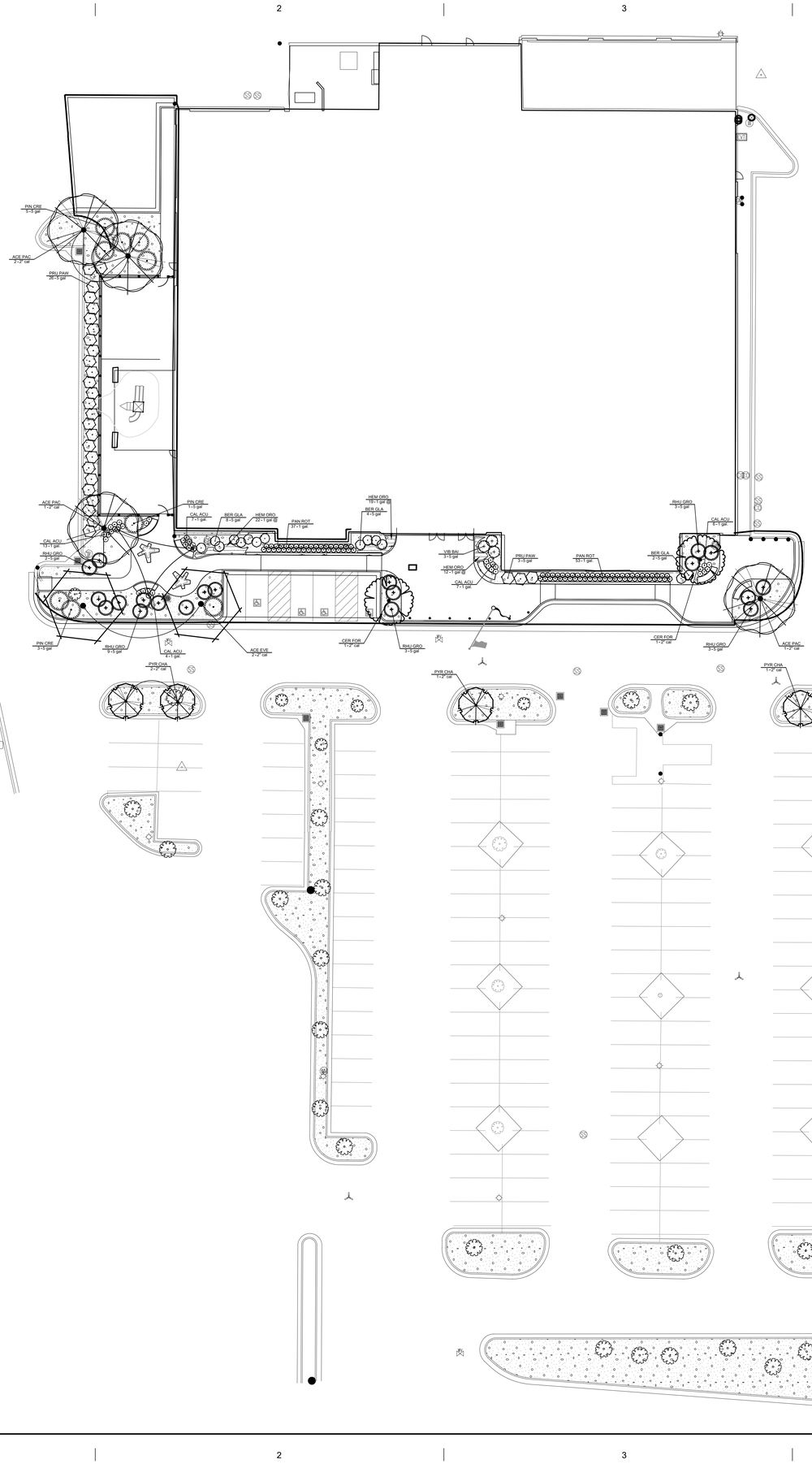

E1 PLANTING PLAN
1" = 20'

VIEW-703358770

Autodesk Docs://2024528 JSD Retail Remodel/A24 2024528 JSD Retail Remodel.rvt
8/27/2024 10:21:33 AM

REFERENCE NOTES SCHEDULE

	09 LANDSCAPE AND IRRIGATION		
CODE	DESCRIPTION	DETAIL	SPECIFICATIONS
09-06	STONE MULCH		329400

PLANT SCHEDULE

SYMBOL	CODE	BOTANICAL NAME	COMMON NAME	SIZE
TREES				
	ACE EVE	ACER CAMPESTRE `EVELYN`	QUEEN ELIZABETH MAPLE	2" CAL
	ACE PAC	ACER TRUNCATUM `PACIFIC SUNSET` TM	PACIFIC SUNSET MAPLE	2" CAL
	CER FOR	CERCIS CANADENSIS `FOREST PANSY` TM	FOREST PANSY REDBUD	2" CAL
	PYR CHA	PYRUS CALLERYANA `CHANTICLEER`	CHANTICLEER PEAR	2" CAL

SYMBOL	CODE	BOTANICAL NAME	COMMON NAME	CONT
SHRUBS				
	BER GLA	BERBERIS GLADWYNENSIS `WILLIAM PENN` TM	WILLIAM PENN BARBERRY	5 GAL
	CAL ACU	CALAMAGROSTIS ACUTIFOLIA `KARL FOERSTER`	FOERSTER`S REED GRASS	1 GAL.
	PAN ROT	PANICUM VIRGATUM `ROTSTRAHLBUSCH`	ROTSTRAHLBUSCH SWITCH GRASS	1 GAL.
	PIN CRE	PINUS SYLVESTRIS `ALBYN PROSTRATA`	CREEPING SCOTCH PINE	5 GAL
	PRU PAW	PRUNUS BESSEYI `PAWNEE BUTTES` TM	CREEPING WESTERN SAND CHERRY	5 GAL
	RHU GRO	RHUS AROMATICA `GRO-LOW`	GRO-LOW FRAGRANT SUMAC	5 GAL
	VIB BAI	VIBURNUM TRILOBUM `BAILEY COMPACTUM`	BAILEY`S COMPACT AMERICAN CRANBERRY BUSH	5 GAL

SYMBOL	CODE	BOTANICAL NAME	COMMON NAME	CONT
SHRUB AREAS				
	HEM ORO	HEMEROCALLIS X `STELLA DE ORO`	STELLA DE ORO DAYLILY	1 GAL @

MHTN
ARCHITECTS
MHTN Architects, Inc.
280 South 400 West
Suite 250
Salt Lake City, Utah 84101
Telephone (801) 595-6700
www.mhtn.com

JORDAN SCHOOL DISTRICT

JORDAN LEARNING CENTER

3706 WEST 9800 SOUTH
SOUTH JORDAN, UT 84009

©2023 MHTN ARCHITECTS, INC.

Confidentiality Notice:
This document is intended for use on the Project identified herein by individuals and companies involved in the design, permitting, bidding and construction of the Project. MHTN Architects, Inc. grants limited rights to distribute and reproduce this document for this express purpose only. Distribution, printing or copying this document for purposes other than those indicated is strictly prohibited. If a digital copy of this document is received in error, please delete it.

SEAL

STATE OF UTAH
VINCENT RULON OLCOTT
No. 4812865
08-29-2024
LICENSED LANDSCAPE ARCHITECT

MHTN PROJECT NO. 2024528

Original drawing is 30 x 42. Do not scale contents of this drawing.

REVISIONS
CONTRACTOR TO VERIFY DRAWINGS IN FIELD USE REFLECT LAST REVISION DATE.

NO.	DATE	DESCRIPTION

ISSUE
CONSTRUCTION DOCUMENTS
AUGUST 29, 2024

SHEET NAME
PLANTING PLAN

SHEET NUMBER
LP101

PLANT SCHEDULE

SYMBOL	CODE	BOTANICAL NAME	COMMON NAME	SIZE	REMARKS
TREES					
	ACE EVE	ACER CAMPESTRE `EVELYN`	QUEEN ELIZABETH MAPLE	2" CAL	
	ACE PAC	ACER TRUNCATUM `PACIFIC SUNSET` TM	PACIFIC SUNSET MAPLE	2" CAL	BRANCHING AT 5`
	CER FOR	CERCIS CANADENSIS `FOREST PANSY` TM	FOREST PANSY REDBUD	2" CAL	
	PYR CHA	PYRUS CALLERYANA `CHANTICLEER`	CHANTICLEER PEAR	2" CAL	BRANCHING AT 5`

SYMBOL	CODE	BOTANICAL NAME	COMMON NAME	CONT	REMARKS
SHRUBS					
	BER GLA	BERBERIS GLADWYNENSIS `WILLIAM PENN` TM	WILLIAM PENN BARBERRY	5 GAL	
	CAL ACU	CALAMAGROSTIS ACUTIFOLIA `KARL FOERSTER`	FOERSTER`S REED GRASS	1 GAL.	
	PAN ROT	PANICUM VIRGATUM `ROTSTRAHLBUSCH`	ROTSTRAHLBUSCH SWITCH GRASS	1 GAL.	
	PIN CRE	PINUS SYLVESTRIS `ALBYN PROSTRATA`	CREEPING SCOTCH PINE	5 GAL	
	PRU PAW	PRUNUS BESSEYI `PAWNEE BUTTES` TM	CREEPING WESTERN SAND CHERRY	5 GAL	
	RHU GRO	RHUS AROMATICA `GRO-LOW`	GRO-LOW FRAGRANT SUMAC	5 GAL	
	VIB BAI	VIBURNUM TRILOBUM `BAILEY COMPACTUM`	BAILEY`S COMPACT AMERICAN CRANBERRY BUSH	5 GAL	

SYMBOL	CODE	BOTANICAL NAME	COMMON NAME	CONT	SPACING	REMARKS
SHRUB AREAS						
	HEM ORO	HEMEROCALLIS X `STELLA DE ORO`	STELLA DE ORO DAYLILY	1 GAL @	18" o.c.	

NOTES:
1- TREES SHALL BE OF QUALITY PRESCRIBED IN CROWN OBSERVATIONS AND ROOT OBSERVATIONS DETAILS AND SPECIFICATIONS.

2- SEE SPECIFICATIONS FOR FURTHER REQUIREMENTS RELATED TO THIS DETAIL.

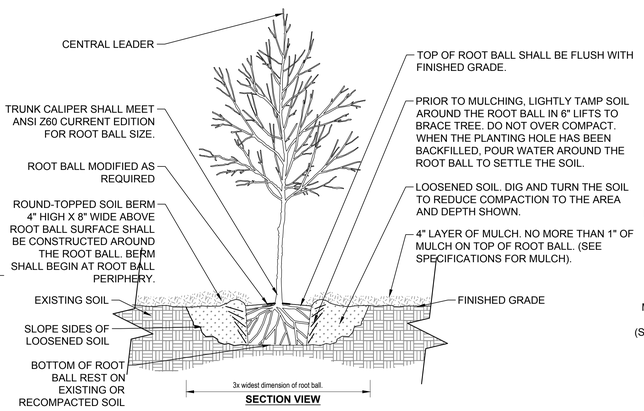

D1 TREE W/ BERM
1/2" = 1'-0" JSD-JS-329346-04

NOTES:
1- TREES SHALL BE OF QUALITY PRESCRIBED IN CROWN OBSERVATIONS AND ROOT OBSERVATIONS DETAILS AND SPECIFICATIONS.

2- SEE SPECIFICATIONS FOR FURTHER REQUIREMENTS RELATED TO THIS DETAIL.

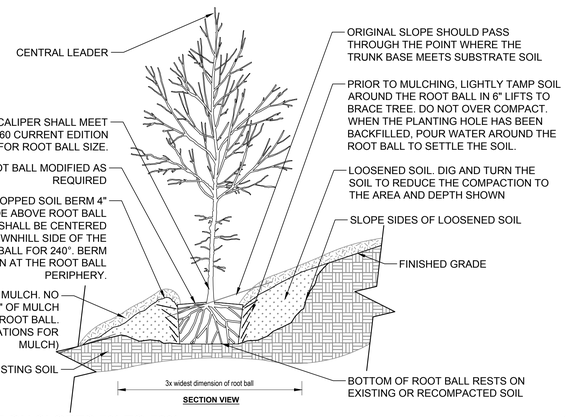

D2 TREE ON SLOPES 5% TO 50%
1/2" = 1'-0" JSD-JS-329346-05

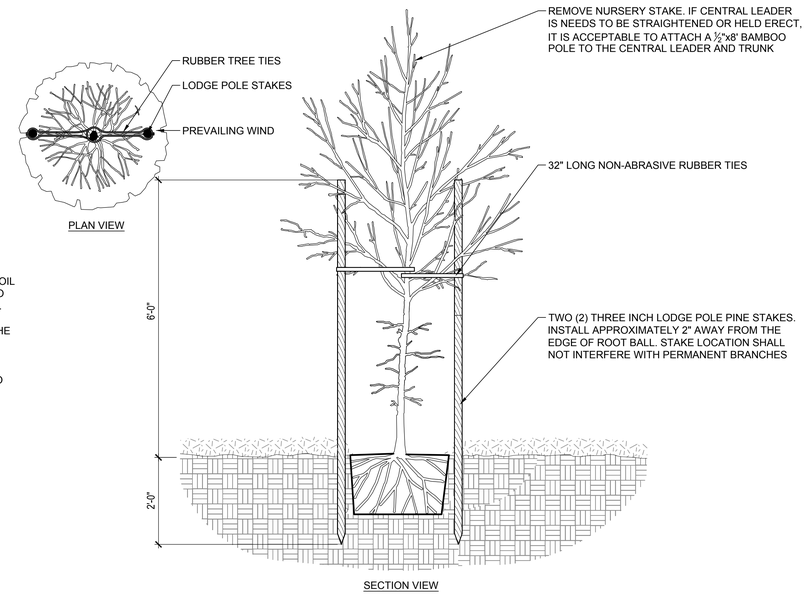

D4 TREE STAKING- LODGE POLES (2)
3/4" = 1'-0" JSD-JS-329346-06

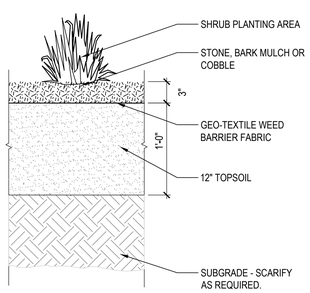

E1 SHRUB TOPSOIL PROFILE
1 1/2" = 1'-0" JSD-JS-329313-08

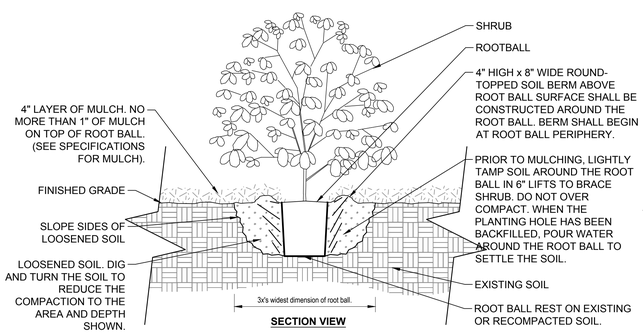

NOTES:
1- SHRUBS SHALL BE OF QUALITY PRESCRIBED IN THE ROOT OBSERVATIONS DETAIL AND SPECIFICATIONS.

2- SEE SPECIFICATIONS FOR FURTHER REQUIREMENTS RELATED TO THIS DETAIL.

E2 SHRUB PLANTING
3/4" = 1'-0" JSD-JS-329333-05

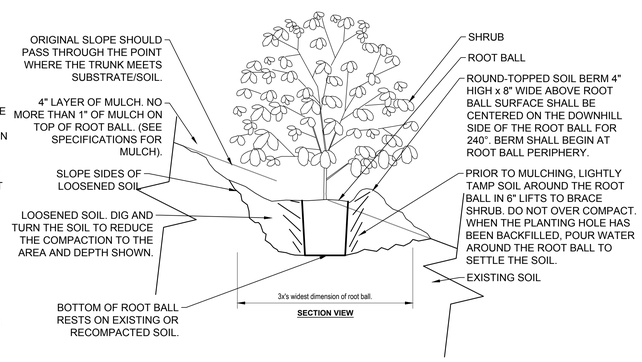

NOTES:
1- SHRUBS SHALL BE OF QUALITY PRESCRIBED IN THE ROOT OBSERVATIONS DETAIL AND SPECIFICATIONS.

2- SEE SPECIFICATIONS FOR FURTHER REQUIREMENTS RELATED TO THIS DETAIL.

E3 SHRUB ON SLOPE 5% (20:1) TO 50% (2:1) - UNMODIFIED SOIL
3/4" = 1'-0" JSD-JS-329333-06

PLANTING NOTES

ALL PLANTS SHALL CONFORM TO THE MINIMUM STANDARDS OF HEIGHT, SIZE, CALIPER AND ETC. OF THE AMERICAN ASSOCIATIONS OF NURSERYMEN "AMERICAN STANDARDS FOR NURSERY STOCK".

THIS CONTRACTOR SHALL SPREAD TOPSOIL TO A DEPTH OF 6" IN ALL LAWN PLANTING AREAS AND 12" IN ALL SHRUB AND PERENNIAL BEDS.

THIS CONTRACTOR SHALL BE RESPONSIBLE FOR DISPOSING FROM THE SITE ALL SOIL EXCAVATED FROM TREE PITS.

ALL MOWSTRIPS ARE TO BE INSTALLED PRIOR TO THE INSTALLATION OF THE IRRIGATION SYSTEM SYSTEM AND THE LANDSCAPE PLANTING.

INSTALL SHREDDED BARK MULCH IN ALL SHRUB PLANTING BEDS AFTER PLANT MATERIAL INSTALLATION.

THIS CONTRACTOR SHALL BE RESPONSIBLE FOR PROVIDING AND INSTALLING TREE PIT DRAINAGE AS SHOWN.

THIS CONTRACTOR SHALL BE RESPONSIBLE FOR PROVIDING AND INSTALLING THE REQUIRED AMOUNT OF TOPSOIL TO COMPLETE THE PROJECT. NEW TOPSOIL SHALL MATCH QUALITY AND TEXTURE OF THE EXISTING TOPSOIL ON SITE.

MHTN ARCHITECTS
MHTN Architects, Inc.
280 South 400 West
Suite 250
Salt Lake City, Utah 84101
Telephone (801) 595-6700
www.mhtn.com

JORDAN SCHOOL DISTRICT

JORDAN LEARNING CENTER
3706 WEST 9800 SOUTH
SOUTH JORDAN, UT 84009

©2023 MHTN ARCHITECTS, INC.

Confidentiality Notice:
This document is intended for use on the Project identified herein by individuals and companies involved in the design, permitting, bidding and construction of the Project. MHTN Architects, Inc. grants limited rights to distribute and reproduce this document for the purposes of design, permitting, bidding or construction. Any other use of this document for purposes other than those indicated is strictly prohibited. If a digital copy of this document is received in error, please delete it.

SEAL

STATE OF UTAH
VINCENT RULON OLDOTT
No. 481285
08-29-2024
LICENSED LANDSCAPE ARCHITECT

MHTN PROJECT NO: 2024528

Original drawing is 30 x 42. Do not scale contents of this drawing.

REVISIONS
CONTRACTOR TO VERIFY DRAWINGS IN FIELD USE REFLECT LAST REVISION DATE.

NO.	DATE	DESCRIPTION

ISSUE
CONSTRUCTION DOCUMENTS
AUGUST 29, 2024

SHEET NAME
PLANTING DETAILS AND NOTES

SHEET NUMBER
LP501

Autodesk Docs://2024528 JSD Retail Remodel/A24 2024528 JSD Retail Remodel.rvt
8/27/2024 10:21:33 AM

1. Design Criteria

1.1. Governing Building Code .... 2021 International Building Code (IBC)
- A. Risk Category III

1.2. Floor Live Loading
- A. Classrooms .... 60 psf Live Load + 15 psf Partition Load
- B. Office .... 50 psf Live Load + 15 psf Partition Load
- C. Exit Facilities & Corridors .... 100 psf Live Load
- D. Mechanical Rooms .... 100 psf Live Load or actual weights, if larger

1.3. Roof Live Loading
- A. Roof Live Load .... 20 psf
- B. Roof Snow Load .... 27 psf + Drift per IBC
  1. Ground Snow Load, P_g .... 35 psf
  2. Snow Exposure Factor, C_e 1.0
  3. Importance Factor, I_s 1.1
  4. Thermal Factor, C_t 1.0
  5. Slope Factor, C_s 1.0
- C. Canopy Roof Snow Load .... 32 psf + Drift per IBC
  1. Ground Snow Load, P_g .... 35 psf
  2. Snow Exposure Factor, C_e 1.0
  3. Importance Factor, I_s 1.1
  4. Thermal Factor, C_t 1.2
  5. Slope Factor, C_s 1.0
  6.
- D. Roof Rain Load Intensity
  1. 15-min duration/100-year return period, i_{15} .... 4.93 in. per hour
  2. 60-min duration/100-year return period, i_{60} .... 2.05 in. per hour

1.4. Earthquake
- A. Seismic Design Category .... D
- B. Spectral Response Accelerations
  - S_S = 1.098 g S_{DS} = 0.878 g
  - S_1 = 0.391 g S_{D1} = 0.498 g
- C. Soil Site Class .... D (Default)
  - F_a = 1.20 F_v = 1.91
- D. Basic Seismic-Force-Resisting System .... Special Reinforce Masonry Shear Walls
  - R = 5 Ω_0 = 2.5 C_d = 3.5
- E. Importance Factor, I_e 1.25
- F. Redundancy Factor, ρ 1.0
- G. Analysis Procedure .... Equivalent Lateral Force (Static)
- H. Seismic Design Coefficient, C_s 0.220
- I. Design Base Shear .... 191 kips

1.5. Wind
- A. Basic Design Wind Speed, V .... 109 mph
- B. Velocity pressure exponent coefficient, K_d 0.85
- C. Ground elevation factor, K_e 0.85
- D. Exposure category C
- E. Internal Pressure Coefficient, GC_{pi} 0.18
- F. Topographic Factor, K_{zt} 1.0
- G. Components and Cladding Design Pressure

Design Wind Pressure - LRFD (psf)					
Location		Tributary Area (ft²)			
		< 10	50	200	> 500
Walls	Within 7.6 ft of building corner	28.0	23.7	20.0	17.5
	All other areas	22.8	20.6	18.7	17.5
Parapet	Within 7.6 ft of building corner	50.5	43.0	36.5	32.2
	All other areas	50.5	43.0	36.5	32.2
Location		Tributary Area (ft²)			
		< 10	25	50	> 100
Roof	Within 11.4 ft of building corner	48.3	38.0	34.9	30.7
	Within 11.4 ft of building edge	48.3	38.0	34.9	30.7
	All other areas	36.6	28.6	26.2	23.0

1.6. Foundation
- A. Soils based on presumptive load-bearing values from IBC 2021 Table 1806.2
- B. Soil Bearing Pressure: .... 1500 psf on undisturbed natural soils. Do not bear on Mud, Organic Silt, Organic Clays, Peat, or Un-Documented / Un-Prepared Fill Materials. Remove these materials if encountered and replace with Compacted Structural Fill.
- C. Increase for seismic or wind loading: 1.3
- D. Frost Depth: .... 30 inches below grade
- E. Lateral Soil Pressure Fluid Equivalent Density.
  1. Passive: .... 100 pcf

1.7. Classification for Fire Rated Construction
- A. For the purpose of determining fire-resistive assemblies, the following framing systems shall be considered unrestrained.
  1. Open web steel framing members supporting metal decking.
  2. Single span and simply supported end spans of multiple bays that are supported by bearing walls:
     - a. Steel beams supporting concrete slabs, metal decking, or precast concrete units.
     - b. Open web steel joists supporting concrete slabs or precast concrete units.
     - c. Concrete slabs, precast concrete units, or metal decking.
  3. Interior spans of multiple bays supported by bearing walls:
     - a. Steel beams supporting metal decking or precast concrete units.
     - b. Open web steel joists supporting precast concrete units.
- B. All other steel floor and roof framing members shall be considered restrained.
- C. Diagonal members in vertical braced frames shall be considered as secondary members for fire proofing protection.

2. Earthwork

2.1. Clearing: The entire building area shall be scraped to remove the top 4 inches of soil, including all vegetation and debris.

2.2. Proof rolling: The natural undisturbed soil below all footings shall be proof rolled prior to placing concrete. Remove all soft spots and replace with compacted structural fill.

2.3. Compacted structural fill: Structural fill shall be provided at all locations and extents described by the TYPICAL COMPACTED STRUCTURAL FILL DETAIL. All fill material shall be a well-graded granular material with a maximum size less than 4 inches and with not more than 10 percent passing a No. 200 sieve. It shall be compacted to 95 percent of the maximum laboratory density as determined by ASTM D1557. All fill shall be tested (See Specifications and the Quality Assurance section of the GSN).

2.4. It shall be the responsibility of the Contractor to brace and shore excavations as required.

3. Concrete

3.1. Materials shall comply with the Standards specified in American Concrete Institute (ACI) 318-19, "Building Code Requirements for Structural Concrete."
- A. Concrete mix design requirements shall be as follows:

Location	f'c at 28 days (psi)	Max W/C Ratio	Air Content (%)	Max Aggregate Size	Exposure Classes*			
					F	S	C	W
Footings	3000	0.50	-	1"	F0	S0	C0	W1
Interior Slabs on Grade	3000	0.45	-	1"	F0	S0	C0	W0
Exterior Walls	4500	0.45	6	¾"	F2	S0	C1	W1
All other site cast concrete	4500	0.45	6	1"	F2	S0	C1	W1

* Exposure Classes are per ACI 318, Section 19.3.1.1, where F, S, C and W are exposure categories for freezing and thawing, sulfate, corrosion protection of reinforcement, and contact with water, respectively.

- B. Cementitious Materials:
  1. Blended Hydraulic Cements (ASTM C595):
     - a. Type IL, or approved equivalent, for exposure class S0.
  2. Portland Cement (ASTM C150):
     - a. Type I or II for exposure class S0.
  3. Fly Ash (ASTM C618, Class C or F): maximum fly ash content as a percentage of total weight of cementitious materials shall be 25 percent.
- C. Aggregates:
  1. For concrete with exposure class W1 or W2, evidence shall be submitted that aggregates comply with the following:
     - a. Aggregates are not alkali-silica reactive or measures to mitigate alkali-silica reactivity have been established.
     - b. Aggregates are not alkali-carbonate reactive.
- D. Concrete Density (Maximum Air Dry Weight):
  1. Normal weight concrete shall be approximately 145 to 155 pounds per cubic foot. Aggregate shall be ASTM C33.
- E. Steel Reinforcement:
  1. ASTM A615 Grade 60, fy = 60,000 psi min. unless noted otherwise.
- F. Fiber Reinforcement:
  1. Synthetic Micro-Fiber: fibrillated polypropylene micro-fibers engineered and designed for use in concrete, complying with ASTM C 1116, 1/2 to 1-1/2 inches long. Add to concrete at a dosage rate of 1.5 lb/cu yd where indicated.
- G. Admixtures:
  1. Air-entraining admixtures, comply with ASTM C 260 (when used).
     - a. Tolerance on air content as delivered shall be +/- 1.5%.
     - b. When air content of a trowel finished floor slab exceeds 3%, there is an increased risk for delaminations and blistering to occur. When this situation is present, the Contractor shall pay special attention to the finishing procedures to help minimize such risks. Refer to ACI 302.1R-15 "Guide for Concrete Floor and Slab Construction" for proper finishing guidelines.
  2. The use of super plasticizers and water reducers is allowed, but not required.
  3. Calcium chloride or admixtures containing calcium chloride shall not be added to the concrete mix.
- H. Chloride Ion: Maximum water soluble chloride ion concentrations in hardened concrete at age between 28 and 42 days contributed from the ingredients including water, aggregates, cementitious materials, and admixtures shall not exceed a maximum, by weight of cementious materials, of 1.00% for concrete with exposure class C0, 0.30% for concrete with exposure class C1, 0.15% for concrete with exposure class C2, and 0.06% for all prestressed concrete.
- I. Slump Limit: 4 inches, maximum for all concrete prior to the addition of plasticizers and water reducing admixtures. The concrete supplier shall indicate the final slump of each concrete mix in the submitted mix design.
- J. Shrinkage Limit: Interior slabs on grade shall have a drying shrinkage limit of 0.040 percent tested in accordance with ASTM C157. Drying shrinkage test results shall be submitted with mix designs.
- K. Only one grade or type of concrete shall be poured on the site at any given time.
- L. Plastic coated tie wires and chairs shall be used to support reinforcing bars, tie bars and tendons in parking structures and other reinforced concrete structures that will be exposed to moisture.

1.2. Formwork shall comply with ACI Standards Publication 347 and the project specifications. The Contractor shall be responsible for the design, detailing, care, placement and removal of the formwork and shores.
- D. Pre-camber forms and screeds with a camber of 1/4" per every 10'-0" of span to compensate for dead load deflection, unless noted otherwise. Post tensioned concrete slabs and beams do not require formwork to be pre-cambered.

1.3. Concrete cover requirements for deformed bar reinforcing steel shall comply with ACI 318, "Building Code Requirements for Structural Concrete".
- D. Cast-in-place Concrete: Specified Cover
  1. Cast against and permanently exposed to earth: .... 3"
  2. Formed concrete exposed to earth or weather:
     - #6 thru #18 bars .... 2"
     - #5 and smaller bars .... 1.1/2"
  3. Concrete not exposed to weather or in contact with ground:
     - Slabs, Walls, Joists; #11 bars and smaller .... 3/4"

1.4. Minimum Spacing of Reinforcement
- D. For parallel reinforcing bars in a horizontal layer, clear spacing between bars shall be at least the greatest of 1 inch, nominal diameter of the bars considered, and (4/3) times the nominal maximum size of coarse aggregate in the concrete.
- E. For longitudinal bars in columns, pedestals, struts and boundary elements in walls, clear spacing shall be at least the greatest of 1.5 inches, 1.5 times the diameter of the bars considered and (4/3) times the nominal maximum size of coarse aggregate in the concrete.
- F. If scheduled reinforcing cannot meet these provisions, notify structural engineer.

1.5. Construction Joints and Control Joints:
- D. Provide a surface intentionally roughened to ¼" amplitude in all wall footings. A continuous keyway shall not be used for concrete shear wall to footing connections, unless specifically indicated. Refer to project plans, schedules and details for the shear wall to footing connection requirements.
- E. All horizontal and vertical construction joints shall have a surface intentionally roughened to ¼" amplitude. A continuous 2 X 4 keyway may be used on elements other than shear walls.
- F. Provide reinforcement dowels to match the member reinforcement across the joint, unless noted otherwise. For dowels across construction joints and wall to footing connections of concrete shear walls, refer to specific project plans, schedules, and details.
- G. Slabs on grade shall have construction or control joints spaced not to exceed 30 times the slab thickness in any direction.
- H. Control joints shall be installed in slabs on grade so the length to width ratio of the slab is no more than 1.25:1. Control joints shall be completed within 12 hours of concrete placement. See typical details for joint configuration.
- I. Control joints in visually exposed walls, unless noted otherwise: (Joints shall line up with masonry and architectural joints, see drawings.)
  1. Vertical control joints at 10'-0" on center.
  2. Reinforcing shall be continuous through control and construction joints, unless noted otherwise.
  3. Control joints in concrete foundation walls shall line up with masonry control joints.

1.6. Detailing: All reinforcing, including welded wire fabric, shall be detailed, bolstered & supported to comply with ACI 315, "Details and Detailing of Concrete Reinforcement" and the Concrete Reinforcing Steel Institute (CRSI) recommendations. Reinforcing bars shall not be welded unless specifically shown on drawings.
- D. All reinforcing shall be developed in compliance with the CONCRETE REINFORCING BAR DEVELOPMENT AND LAP SPLICE SCHEDULE. As indicated in the drawings or upon approval of the Engineer of Record, standard tension hooks or headed bars described by the TENSION HOOK DEVELOPMENT SCHEDULE or the TENSION HEADED BAR DEVELOPMENT SCHEDULE may be used in lieu of straight bars.
- E. All mechanical splices shall have the capacity to develop at least 1.25fy of the bar in tension or compression. Type 2 couplers have the capacity to develop the full tension capacity of the bar. Type 1 couplers shall not be used in moment frames and shear wall jamb columns. Mechanical splices shall have a current ICC or IAPMO code evaluation report; "Lenton" (IAPMO No. 0129), "Taper-Lock" (IAPMO No. 0319) or "SAS Stressteel" (ICC ESR-1163), "Bar-Lock" (ICC ESR-2495) or approved equivalent may be used. Mechanical couplers on adjacent bars shall be staggered a minimum of 24" apart along the longitudinal axis of the reinforcing bars.
- F. All embedded elements and dowels shall be securely tied to formwork or to adjacent reinforcing prior to the placement of concrete.
- G. Use chairs or other support devices recommended by CRSI to support and tie reinforcement bars and welded wire fabric prior to placing concrete. Welded wire fabric shall be continuously supported at 36" o.c. maximum.
- H. See typical details for reinforcing at wall intersections and ends, reinforcing around wall openings and suspended slab openings, vertical wall dowels, concrete column ties and splices in vertical column reinforcing.
- I. See typical details for column cross-ties. The 90-degree hooks of two successive crossties engaging the same longitudinal bars shall be alternated end for end.
- J. Where required, reinforcement is to be terminated in a standard hook or headed bar anchor. Refer to the TENSION HOOK DEVELOPMENT SCHEDULE, the TENSION HEADED BAR DEVELOPMENT SCHEDULE and the REINFORCEMENT END HOOK SCHEDULE as appropriate. Unless otherwise noted, a standard hook or headed bar are equivalent and may be substituted at the Contractor's option.
- K. Contractor shall coordinate placement of all openings, curbs, dowels, sleeves, conduits, bolts, inserts and other embedded items prior to concrete placement.
- L. All reinforcement shall be bent cold, and shall be bent only once at the same location. All reinforcement shall be shop bent, unless otherwise permitted by the Engineer.

1.7. Minimum Reinforcing: Wall reinforcing shall be as follows, unless noted otherwise:

Wall Thickness	Horizontal Reinforcing	Vertical Reinforcing
6"	#4 @ 13" o.c.	#4 @ 18" o.c.
8"	#5 @ 15" o.c.	#4 @ 16" o.c.
10"	#5 @ 12" o.c.	#4 @ 13" o.c.
12"	#4 @ 13" o.c. Each Face	#4 @ 18" o.c. Each Face
Others	0.25% of Wall Area	0.15% of Wall Area

Spacing shall exceed neither three times the wall thickness nor 18". In addition to the above reinforcing, 2 - #5 x continuous horizontal bars shall be placed at the bottom of the wall (near the footing) and at each floor level, at the roof level and at the top of wall.

1.8. No aluminum conduit or product containing aluminum or any other material injurious to concrete shall be embedded in concrete.

1.9. Unless otherwise noted, all slabs on grade shall be 4" thick.

4. Masonry

4.1. Materials shall comply with the Standards specified in TMS 402-16 and TMS 602-16, "Building Code Requirements and Specification for Masonry Structures."
- A. Materials, unless noted otherwise:
  1. Concrete Masonry Units: ASTM C 90, Medium Weight.
  2. Material Strength: The Prism Test Method or the Unit Strength Method according to TMS 602-16 Section 1.4B may be used to determine the compressive strength of masonry assemblies. The contractor shall select the desired method and meet the required material strengths as follows:
     - a. Prism Test Method, TMS 602-16 Section 1.4B.3:
       - 1) Concrete Masonry Unit Assembly, f'm = 2000 psi.
     - b. Unit Strength Method, TMS 602-16 Section 1.4B.2:
       - 1) Concrete Masonry Units, minimum unit strength of 2000 psi average or better. (f'm = 2000 psi)
  3. Mortar: Use Type "S" according to ASTM C270, proportion specification. Admixtures shall not be added to the mortar mix.
  4. Grout: For masonry assemblies with f'm = 2,000 psi or less conform to ASTM C476, proportion specification. Grout that does not meet the requirements of ASTM C476 proportion specification or that is used in masonry assemblies with f'm > 2,000 psi shall meet the following requirements: Meet the material requirements of ASTM C476, obtain a minimum compressive strength of f'm or 2,000 psi, whichever is larger, at 28 days tested according to ASTM C1019, and a slump of 8 in. to 11 in. as determined by ASTM C143.
     - a. Self-Consolidating Grout: Conform to the material requirements of ASTM C476, obtain a minimum compressive strength of f'm or 2,000 psi, whichever is larger, at 28 days tested according to ASTM C1019, obtain a slump flow of 24 in. to 30 in. as determined by ASTM C1611, and shall have a Visual Stability Index less than or equal to 1 as determined in accordance with ASTM C1611 Appendix X.1. Field addition of admixtures is not permitted.
  5. Reinforcing: Grade 60 reinforcing steel shall comply with ASTM A615. Wire joint reinforcing shall comply with ASTM A951.
  6. Deformed Bar Anchors (DBA): All DBAs shall comply with ASTM A496.
  7. Anchor Bolts (AB): ASTM A307 with ASTM A563 heavy hex nuts and hardened washers, Grade A, unless noted otherwise.
  8. Headed Stud Anchors (HSA): Manufacture all HSAs in conformance with ASTM A108 with dimensions complying with AISC specifications.

4.2. Construction Requirements:
- A. Mortar Joints: Joints shall be "concave", "V-joint" or "weathered raked" for structural members unless noted otherwise on architectural drawings.
- B. Masonry walls, beams and columns shall be constructed with running bond, unless noted otherwise.
- C. Grouting Requirements: Comply with IBC Section 2104 and TMS 602 Section 3.5. Grout shall be mechanically consolidated and mechanically reconsolidated according to TMS 602 Section 3.5 E.
  1. Grout Pour Heights that exceed 4 feet shall meet the following requirements:
     - a. Provide cleanouts in the bottom course of masonry for each grout pour in accordance with TMS 602 Section 3.2 F.
     - b. For grout other than Self Consolidating Grout a demonstration panel representative of the proposed wall construction and construction procedures shall be provided and approved by the Architect. The demonstration panel may be a part of the completed construction as approved by the Architect.
     - c. For Self-Consolidating Grout placed in masonry that has cured for at least 4 hours, place in lifts not exceeding the Maximum Grout Pour Height in listed in TMS 602 Section 3.5C.
  2. When grouting, form grout keys between grout pours. Form grout keys between grout lifts when the first lift is permitted to set prior to placement of the subsequent lift.
     - a. Form a grout key by terminating the grout a minimum of 1.1/2 in. below a mortar joint.
- D. Reinforcing Bars shall not be welded unless specifically shown on drawings. In such cases, use only AWS standards. Do not substitute reinforcing bars for DBAs or HSAs.
- E. Control Joints: Spacing shall not exceed 40'-0" or 2.5 times the wall height, whichever is less. Joints shall not be located over masonry openings, and shall be a minimum of the schedule masonry column width away from masonry openings. See architectural drawings for locations.
- F. Grout all beam and joist pockets solid after installation of beams and joists.
- G. Masonry Veneer Attachment and Reinforcing:
  1. Joint reinforcement: Veneer shall have continuous, galvanized 9 gauge wire joint reinforcement spaced vertically at 18" o.c. maximum. Mechanically attach veneer anchors to the continuous wire joint reinforcing with Hohmann & Barnard Seismiclip Interlock System (S.I.S.) clips.
  2. Veneer shall be attached with anchors as follows:

Backup	Insulation Present	Veneer Anchors	Fasteners to Backup
Reinforced masonry walls with joints aligned in veneer	Yes or No	Hohmann & Barnard 270-2X Ladder Eye Wire	Cast in place
Reinforced masonry walls with joints not aligned in veneer	Yes	Hohmann & Barnard 362-CX Gripstay Channel Slot with 363-BT	corrosion resistant screw or sleeve expansion anchors with 200 lb. allowable capacity
	No	Hohmann & Barnard 362-C Gripstay Channel Slot with 363-BT	corrosion resistant screw or sleeve expansion anchors with 200 lb. allowable capacity
Wood or steel studs	Yes	Hohmann & Barnard HB-213-2X	#10 corrosion resistant screws
	No	Hohmann & Barnard DW-10HS	#10 corrosion resistant screws

  3. Anchors shall be spaced at a maximum of 16" o.c horizontally and 18" o.c. vertically.
  4. Anchors, slots, channels and ties shall be galvanized.
  5. Other methods of attachment may be used with written acceptance by the Architect and Structural Engineer.

4.3. Detailing Requirements:
- A. Standards: Reinforcing detailing shall comply with American Concrete Institute (ACI) Standard 315, "Details and Detailing of Concrete Reinforcement."
- B. Reinforcement Protection (cover):
  1. Joint reinforcement shall have not less than 5/8" mortar coverage from the exposed face.
  2. Other reinforcement shall have a minimum coverage of one bar diameter over all the bars, but not less than 3/4". When masonry is exposed to soil, minimum coverage shall be 1.5".
- C. Vertical steel reinforcement shall be placed and secured against displacement prior to grouting by wire positioners or other suitable devices: at intervals not exceeding the least dimension of the grout lift height, or bar splice locations, or 64". Vertical reinforcing shall be located at the center of the wall, unless noted otherwise.
- D. Lap Splice Lengths: Lap all masonry reinforcing bars per the "Masonry Reinforcing Bar Lap Splice Schedule." Joint reinforcement shall lap a minimum of 6".
- E. Corner Bars: Horizontal reinforcement shall be continuous at all corners and at intersecting walls. Provide corner bars with the required lap splice length.
- F. Dowels: All vertical reinforcing shall be doweled to the foundation wall, footing (structure below) and to the structure above with the same size dowel, spacing (and in the same core) as the vertical wall reinforcing unless noted otherwise.
- G. Horizontal wall reinforcing shall be continuous through joining concrete walls, masonry walls, columns, and pilasters. Provide a key between the wall and the column or pilaster. Horizontal wall reinforcing shall be placed inside the column vertical reinforcing.
- H. Anchor bolts and headed stud anchors shall be set in a grouted cell. Anchor bolts and headed stud anchors shall have 1" grout surrounding the shank at its penetration. Grout shall be flush with the face or top of the masonry.
- I. The exposed face of all embed plates shall be set flush with the face of masonry wall or column.

4.4. Minimum Reinforcing:
All masonry walls shall be reinforced as follows, unless shown otherwise on the drawings. Reinforcing shall be placed in grouted cells.

Wall Thickness	Horizontal Reinforcing	Vertical Reinforcing
6"	#4 @ 48" o.c.	#5 @ 32" o.c.
8"	#5 @ 48" o.c.	#5 @ 32" o.c.
10"	#6 @ 48" o.c.	#6 @ 32" o.c.
12"	2 - #5 @ 48" o.c.	#6 @ 32" o.c.

5. Structural Steel

5.1. Material:
- A. W-Shapes: ASTM A992, (F_y = 50 ksi), except as noted otherwise
- B. All Other Shapes and Plates: ASTM A36 (Fy = 36 ksi), except as noted otherwise
- C. Rectangular and Square Hollow Structural Sections (HSS): ASTM A500, Grade C (Fy = 50 ksi)
- D. Round HSS: ASTM A500, Grade C (Fy = 46 ksi)
- E. Steel Pipe: ASTM A53, Grade B (Fy = 35 ksi)
- F. Steel Deck:
  1. Galvanized Steel Sheet: ASTM A653 or A1063, Grade 50 with G60 galvanized coating.
  2. Ungalvanized Steel Sheet: ASTM A1008 or A1039, Grade 50
- G. High-Strength Bolts:
  1. Group A: ASTM F3125 Grades A325 & F1852
  2. Group B: ASTM F3125 Grades A490 & F2280
  3. Group C: ASTM F3043 & ASTM F3111
- H. Deformed Bar Anchors (DBA): ASTM A496 or ASTMA1064, 70 ksi minimum yield strength.
- I. Headed Stud Anchors (HSA): ASTM A108, with dimensions complying with AISC specifications
- J. Anchor Rods: ASTM F1554, Grade 36, unless noted otherwise, with ASTM A563 heavy hex nuts and ASTM F436 hardened washers

5.2. Fabrication and construction shall comply with the following Codes and Standards:
- A. American Institute of Steel Construction (AISC)
  1. AISC 360-16, "Specification for Structural Steel Buildings"
  2. AISC 341-16, "Seismic Provisions for Structural Steel Buildings"
  3. AISC 303-16, "Code of Standard Practice for Steel Buildings and Bridges"
     - a. The structural drawings shall be used in conjunction with the architectural drawings. Detailing and shop drawing production for structural elements will require information (including dimensions) contained in architectural, structural, and/or other consultants' drawings. Refer to the Special Instructions section of the general notes, below.
- B. Research Council on Structural Connections (RCSC), "Specification for Structural Joints Using High-Strength Bolts," August 1, 2014.
- C. American Welding Society (AWS)
  1. AWS D1.1—2015: "Structural Welding Code – Steel" (specific items do not apply when they conflict with the AISC requirements)
  2. AWS D1.8—2016: "Structural Welding Code – Seismic Supplement" (specific items do not apply when they conflict with the AISC requirements)
- D. Steel Joist Institute (SJI)
  1. SJI 100-20, "45th Edition Standard Specifications, Load Tables and Weight Tables for K-Series, LH-Series, DHL-Series, and Joist Girders"
  2. SJI 200-15, "2nd Edition Standard Specification, Weight Tables and Bridging Tables for CJ-Series Composite Steel Joists"

5.3. Structural shapes and plates shall be fabricated from newly rolled (milled) one-piece sections without splices, unless specifically noted otherwise on the structural drawings. Connections for structural steel shall comply with the structural drawings, unless written approval is given by the Structural Engineer.

5.4. Welding:
- A. It is recommended the steel erection contractor and steel fabricator contact the Quality Assurance Agency prior to beginning any welds. A program of joint preparation and welding procedures should be worked out between the two parties before the welding is started so that correct welds will be made from the beginning.
- B. Certification of Welders: All shop and field welding shall be executed by AWS certified welders who have been specifically certified for the process of welding being performed. The welder's certification will be considered as being current unless the welder is not engaged in the process of welding being performed for a period exceeding six months or there is a specific reason to question a welder's ability as required by AWS. Certification and records must comply with AWS Standards. Certification and appropriate records must be provided to the Architect prior to beginning work.
- C. Electrodes: E-70 XX or as noted otherwise. E60 XX may be used for welding steel floor and roof decks.
- D. Minimum Welds: All intersecting steel shapes that are not bolted shall be connected by a fillet weld all around, unless noted otherwise. Fillet weld sizes that are not shown shall be 1/16" less than the thinnest of the connected parts for thicknesses 1/4" and larger. Fillet welds on plates less than 1/4" shall be of the same size as the thinnest of the connected parts.
- E. Reinforcing Bars: Do not weld rebar except as specifically detailed in the drawings. In such cases, use only AWS standards. Do not substitute reinforcing bars for deformed bar anchors (DBAs), machine bolts, or headed stud anchors (HSAs).
- F. Bolts: Do not apply any welds, including "tack" welds to bolts, including anchor bolts, except as specifically detailed in the drawings.
- G. Headed Stud Anchor (HSA) welding and Deformed Bar Anchor (DBA) welding shall conform to the manufacturer's specifications. Welding shall comply with AWS D1.1 Section 7.6 through 7.9 and Annex G.

5.5. Bolted Connections:
- A. Provide snug tightened joints with Group A (threads not excluded) bolts for steel to steel connections, unless noted otherwise. Snug tightened joints shall be used in connections for simple span framing and beam (or girder) to bearing plate connections. Snug tight is the condition that exists when all of the plies in a connection have been pulled into firm contact by the bolts in the joint and all of the bolts in the joint have been tightened sufficiently to prevent the removal of the nuts without the use of a wrench. The snug tightened condition is typically achieved with a few impacts of an impact wrench, application of an electric torque wrench until the wrench begins to slow, or the full effort of a worker on an ordinary spud wrench.
- B. Provide hardened washers beneath the turned element of all bolts or nuts. Provide hardened beveled washers, to compensate for the lack of parallelism, where the outer face of the bolted parts has a slope greater than one in twenty with respect to the plane normal to the bolt axis. Hardened washers or plates installed over oversized holes or slotted holes shall be at least 5/16" thick and shall conform to ASTM F436. Plates or bars installed at slotted holes shall have a size sufficient to completely cover the slot after installation.
- C. Where a steel to steel beam connection is not detailed in the drawings, provide a standard AISC framed connection with the capacity to support one half of the total uniform load capacity of the given shape for the span and for the steel specified.
- D. Bolts, nuts and washers shall not be reused.

5.6. Steel Lintels
- A. Provide steel angle lintels at all openings through the masonry veneer. Provide one inch of bearing for each foot of width of opening, with a minimum bearing of six inches. See the STEEL ANGLE LINTEL SCHEDULE for size. All steel lintels shall be galvanized unless noted otherwise.

5.7. Beam Web Stiffener Plates:
- A. Provide full-height web stiffener plates to each side of all beams above all bearing points. Unless noted otherwise, stiffener plates shall be the thickness indicated in the typical stiffener plate detail.

5.8. Open Web Steel Joists and Girders:
- A. The steel joist supplier shall be responsible for the design of all open web steel joists and girders. Joists or girders with slopes greater than 1/2 inch per foot shall be designed to meet or exceed the load capacities, listed in the SJI load tables, of the joist or girder sizes indicated on the framing plan, as if the joists or girders were installed level.
- B. Open web joists and girders shall be designed with deflection limits of L/240 for total load and L/360 for live load, where L is the joist span.
- C. Where uplift loads due to wind are indicated, rows of bottom chord bridging shall be provided at the first bottom chord panel points per SJI Specifications. This is in addition to the bridging shown on the framing plans.
- D. Provide special bearing ends to accommodate slopes from sloped joists, sloped girders or sloped bearing conditions.
- E. Camber: All joists shall be cambered as specified in the SJI specifications, unless noted otherwise.
- F. Field Modifications: Do not modify any joist or girder, including holes through the top and bottom chords, without the written consent and direction from the manufacturer.
- G. Shop Drawings and Design Calculations: Shop drawings for all joists and girders used in the project shall be submitted for review. Prior to the fabrication of joists and girders, the open web steel joist and girder manufacturer shall prepare complete joist and girder calculations under the direct supervision of a Professional Engineer licensed in the State of Utah. Calculations shall be submitted for review for joists and girders designated as SPECIAL or SP and for all joists or girders with axial loads or additional concentrated loads (as noted on the drawings). Submitted calculations shall bear the seal of a Professional Engineer licensed in the State of Utah.
- H. Stabilizer Plates: Provide steel joist and joist girder stabilizer plates as indicated. Stabilizer plates shall be 6" x 6" with a 13/16" diameter hole with 1.1/2" minimum edge distance, and shall extend 3" minimum below the bottom chord of the joist or girder. Plate thickness shall be equal to the chord gap minus 1/4", or 3/4", whichever is less.
- I. Verify size, weight, location and configuration of all roof top equipment with Architect and mechanical Engineer. Provide steel frames for support of roof top equipment as indicated on structural details in the structural drawings. Coordinate openings with the Mechanical and General Contractor.
- J. All concentrated loads greater than 100 pounds supported by open web steel joists and girders shall be located within 6 inches of joist or girder panel points or the joist or girder shall be reinforced with an additional web member. Refer to the "TYPICAL DETAIL AT ADDITIONAL CONCENTRATED POINT LOAD" in the structural drawings.
- K. Concentrated point loads, single or multiple, totaling 100 pounds or less can be located at any point along the top or bottom chord of an open web steel joist or girder between adjacent panel points without meeting the requirements above. A limit of four concentrated 100# maximum point loads per joist or girder will be permitted on spans of 12' or greater, one concentrated 100# max. load on spans less than 12', unless specifically noted otherwise on the structural drawings.
- L. Joist bridging shall never be used to support hanging loads.
- M. Bracing of miscellaneous items (mechanical, electrical, plumbing, etc.) to the bottom chord of joists or girders will not be allowed in any instance. All lateral braces must connect to the top flange/top chord of the framing member above unless noted otherwise on the structural drawings.
- N. A certificate of compliance must be submitted to the building official upon completion of fabrication in accordance with IBC Section 2207.5.

6. Cold-Formed Steel

6.1. General Conditions:
- A. The cold-formed steel framing drawings and details provide the general design intent and do not cover all conditions. The Contractor shall provide cold-formed framing as required to complete the wall section geometry as shown in the architectural drawings, including additional studs and connections as required to provide a complete installation. The Contractor shall provide engineering for conditions not specifically detailed in the construction drawings.

6.2. Material:
- A. Studs:
  1. Base metal thickness of less than 54 mil: ASTM A1003 or A653, Fy = 33 ksi.
  2. Base metal thickness of 54 mil or greater: ASTM A1003 or A653, Fy = 50 ksi.
- B. Track, Connection Clips, and Miscellaneous Shapes:
  1. Base metal thickness of less than 54 mil: A1003 or A653, Fy = 33 ksi.
  2. Base metal thickness of 54 mil or greater: A1003 or A653, Fy = 50 ksi

6.3. Design, fabrication and construction shall comply with the following Codes and Standards from the American Iron and Steel Institute (AISI):
- A. AISI S100-16(2020) w/s2-20: "North American Specification for the Design of Cold-Formed Steel Structural Members" 2016 Edition (Reaffirmed 2020), with Supplement 2, 2020 Edition
- B. AISI S202-20: "Code of Standard Practice for Cold-formed Steel Framing," 2020
- C. AISI S220-20, "North American Standard for Cold-Formed Steel Nonstructural Framing," 2020
- D. AISI S240-20: "North American Standard for Cold-Formed Steel Structural Framing," 2020
- E. AISI S400-20: "North American Standard for Seismic Design of Cold-formed Steel Structural Systems," 2020

6.4. Non-Load-Bearing Exterior Cold-Formed Steel Framing:
- A. All non-load bearing exterior cold-formed steel (and/or) joist framing members along with all runner, bridging, and end track shall be of the designation shown on the plans, schedules, and details. The framing member designators used in the plans, schedules, and details follow the convention established by the Steel Stud Manufacturers' Association (SSMA) and the North American Steel Framing Alliance (NASFA). Framing members provided shall comply with the designations according to this convention. See Steel Stud Manufacturers Association-Nomenclature for an explanation of the stud or track designations.
- B. All components shall be galvanized.
- C. Where not noted in the drawings, all framing members shall have a base metal thickness of 33 mil or greater.
- D. All jamb, header, and sill components shall be continuous without splices unless noted otherwise. Jambs shall extend continuous from floor to floor, roof, or wind girt.
- E. Web punchouts in header stud members shall not be located within 12 inches of the support.
- F. Fasteners for steel stud construction shall be self-drilling and self-tapping meeting ASTM C1513. Screw-type fasteners shall penetrate the joined materials with a minimum of three threads exposed. Furnish, install, and tighten screws per the manufacturer's recommendations and per the sizes indicated in the details. The minimum screw-type fastener size shall be #10 for any connection, unless noted otherwise, or the manufacturers' minimum recommended size for framing clips and bridging. Screws shall have a center-to-center spacing of at least 3 times the nominal diameter of the screw unless noted otherwise. Screws shall have center-of-screw to edge-of-steel dimensions of at least 1.5 times the nominal diameter of the screw unless noted otherwise.
- G. Cold-rolled channel (or steel angle) bridging shall not be used without suitable full-depth angle clips fastened to the studs and channel or angle to prevent stud roll-over.
- H. Wall to floor or roof connections shall use deflection tracks or steel clips designed to accommodate vertical deflection of the floor or roof structure. See specific details for further information. Vertical deflection assemblies shall accommodate ¾" min of vertical deflection unless noted otherwise. Do not attach screws through sheathing into top track of deflection assembly. Top screw through sheathing shall be 1" below track.
- I. Connection clips as specified in the details use The Steel Network (TSN) products as the basis of design. Other manufacturer's connection clips, must be submitted for review and approved by the Architect/Engineer prior to use, and shall clearly indicate all ICC/IAPMO code reports, load capacities and engineering associated with their use. Follow all manufacturers' recommendations for the use of these products. Follow required screw patterns as required by the manufacturer based on the number of screws indicated.

6.5. Load-Bearing Cold-Formed Steel Framing:
- A. Provisions for non-load-bearing exterior cold-formed steel framing also apply to load-bearing cold-formed steel framing.
- B. Wall studs must seat fully in top and bottom wall track with 1/8" maximum gap between the stud and the track.

6.6. Welding:
- A. The steel stud contractor shall contact the Quality Assurance Agency prior to beginning any welds. A program of joint preparation and welding procedures should be worked out between the two parties before the welding is started so that correct welds will be made from the beginning.
- B. Certification of Welders: All shop and field welding shall be executed by AWS certified welders who have been specifically certified for the process of welding being performed. The welder's certification will be considered as being current unless the welder is not engaged in the process of welding being performed for a period exceeding six months or there is a specific reason to question a welder's ability as required by AWS. Certification and records must comply with AWS Standards. Certification and appropriate records must be provided to the Architect prior to beginning work.
- C. Unless noted otherwise, all welded connections shall be done using 1/8" AWS type 6013 or 7014 rod with a welding heat of 60-110 amperes depending on the gauge of material and the fit of the parts. Wire tying of framing components shall not be permitted. Welds and damaged coatings on studs shall be repaired with zinc galvanizing repair paint.

6.7. Submittals with Prefabricated Systems or systems intended to replace conventional framing herein shall have complete shop drawings and calculations of all elements for review and bear the stamp of a Professional Engineer registered in the State of Utah.

7. Miscellaneous

7.1. Post-Installed Anchors in Concrete and Masonry
- A. Anchorage to hardened concrete and grout-filled masonry shall include all mechanical and adhesive anchors and epoxy doweled reinforcing bars of size, quantity, spacing, and embedment as shown on the drawings. Additional anchors shall not be used without approval from the Engineer prior to installation.
- B. Special inspection is required during the installation of all post-installed anchors. Refer to applicable code evaluation reports and the Quality Assurance and Statement of Special Inspections sections of the General Structural Notes.
- C. Anchorage to Concrete:
  1. All post-installed anchors into hardened concrete shall be selected from the following pre-approved products, unless noted otherwise:

Steel Screw Anchor	Evaluation Report
Hilti Kwik HUS-EZ	ICC ESR-3027
DeWalt Screw-Bolt+	ICC ESR-3889
Simpson Titen HD	ICC ESR-2713

Steel Expansion/Wedge Anchor	Evaluation Report
Hilti Kwik Bolt TZ2	ICC ESR-4266
DeWalt Power-Stud+ SD2	ICC ESR-2502

MHTN ARCHITECTS

MHTN Architects, Inc.
280 South 400 West
Suite 250
Salt Lake City, Utah 84101
Telephone (801) 595-6700
www.mhtn.com

REAVELEY Engineers
515 East 100 South, Suite 1200
Salt Lake City, Utah 84102
801 486 3883
www.reaveley.com

JORDAN SCHOOL DISTRICT

JORDAN LEARNING CENTER

3706 WEST 9800 SOUTH
SOUTH JORDAN, UT 84009

©2023 MHTN ARCHITECTS, INC.

Confidentiality Notice:
This document is intended for use on the Project identified herein by individuals and companies involved in the design, permitting, bidding and construction of the Project. MHTN Architects, Inc. grants limited rights to distribute and reproduce this document for this express purpose only. Distribution, printing or copying this document for purposes other than those indicated is strictly prohibited. If a digital copy of this document is received in error, please delete it.

SEAL

PROFESSIONAL STRUCTURAL ENGINEER No. 4859789-2203 JUSTIN D. NADAULD STATE OF UTAH
08/29/24

MHTN PROJECT NO. 2024528

Original drawing is 30 x 42. Do not scale contents of this drawing.

REVISIONS
CONTRACTOR TO VERIFY DRAWINGS IN FIELD USE REFLECT LAST REVISION DATE.

NO.	DATE	DESCRIPTION

ISSUE
CONSTRUCTION DOCUMENTS 100%
08/29/24

SHEET NAME
GENERAL NOTES

SHEET NUMBER
SE001

Autodesk Docs://2024528 JSD Retail Remodel/S24 2024528 JSD Retail Remodel.rvt
8/27/2024 7:12:51 PM

Simpson Strong-Bolt 2	ICC ESR-3037

Adhesive Anchor System	Evaluation Report
Hilti HIT-HY 200	ICC ESR-3187
Hilti HIT-RE 500 V3	ICC ESR-3814
DeWalt AC200+	ICC ESR-4027
DeWalt Pure 110+	ICC ESR-3298
Simpson SET-3G	ICC ESR-4057

2. Adhesive anchors shall be installed into concrete having a minimum age of 21 days. For installations sooner than 21 days, consult the adhesive manufacturer.

D. Anchorage to Masonry:
1. All post-installed anchors into grout-filled masonry shall be selected from the following pre-approved products, unless noted otherwise:

Steel Screw Anchor	Evaluation Report
Hilti Kwik HUS-EZ	ICC ESR-3056
DeWalt Screw-Bolt+	ICC ESR-4042
Simpson Titen HD	ICC ESR-1056

Steel Expansion/Wedge Anchor	Evaluation Report
Hilti Kwik Bolt TZ2	ICC ESR-4561
DeWalt Power-Stud+ SD1	ICC ESR-2966
Simpson Wedge-All	ICC ESR-1396

Adhesive Anchor System	Evaluation Report
Hilti HIT-HY 270	ICC ESR-4143
DeWalt AC100+ Gold	ICC ESR-3200

E. Alternate anchors or adhesives are permitted with approval of the Engineer. The Contractor shall submit the proposed anchor product data and code evaluation report demonstrating the anchor is equivalent to or exceeds the capacity of the specified anchor.
F. Installation of adhesive anchors horizontally or upwardly inclined to support sustained tension loads shall be performed by personnel certified by an applicable certification program. Certification shall include written and performance tests in accordance with the ACI/CRSI Adhesive Anchor Installer Certification program, or equivalent. Proof of current certification shall be submitted to the Engineer for approval prior to commencement of installation.
G. Anchors shall be installed according to the Manufacturer's Printed Installation Instructions and applicable code evaluation reports including:
1. Hole diameter, depth, and cleaning procedure
2. Adhesive mixing, preparation, and placement
3. Installation torque
H. Locate all existing reinforcement and embedded items prior to drilling into concrete or masonry elements. Do not damage rebar or embeds while drilling or installing anchors.
I. Grout all defective or abandoned holes with non-shrink grout or an injectable epoxy adhesive matching the surrounding concrete compressive strength. Consult the Architect for additional requirements at architecturally exposed concrete.
J. Carbon steel anchors are limited to use in dry, interior locations.
K. Holes for post-installed anchors may not be core drilled unless specifically allowed by the manufacturer's installation instructions and the code evaluation report.

8. Special Instructions

8.1. The project specifications are not superseded by the General Structural Notes but are intended to be complementary to them. Consult the specifications for additional requirements in each section. Notes and specific details on the drawings shall take precedence over General Structural Notes and typical details.

8.2. The architectural drawings are the prime contract drawings. Consultant drawings by other disciplines are supplementary to the architectural drawings. All omissions or conflicts, including dimensions, between the various elements of the consultants' drawings and/or specifications shall be brought to the attention of the Architect before proceeding with any work involved. In case of conflict, follow the most stringent requirement as directed by the Architect without additional cost to the Owner. Any work done by the Contractor after discovery of such discrepancy shall be done at the Contractor's risk.

8.3. The structural drawings shall be used in conjunction with the architectural drawings. Primary structural elements and overall structural layout are indicated within the structural plans and details. Some secondary elements, architectural layouts, alcoves, elevations, slopes, depressions, curbs, mechanical equipment and electrical equipment, are not indicated within the structural drawings. Detailing and shop drawing production for structural elements will require information (including dimensions) contained in the architectural, structural and/or other consultants' drawings.

8.4. Shoring and Bracing Requirements:
A. Floor and Roof Structures – The General Contractor is responsible for the method and sequence of all structural erection. The Contractor shall provide temporary shoring and bracing as the method of erection requires to provide adequate vertical and lateral support. Shoring and bracing shall remain in place as the chosen method requires until all permanent members are in place and all final connections are completed, including all roof and floor attachments. The building shall not be considered stable until all connections are complete.

8.5. All expansion joints (E.J.) shown in the structural drawings shall be considered seismic separation joints, unless noted otherwise. The width dimensioned shall be provided with a tolerance of (+1"/-0") regardless of the tolerances stated in material reference standards.

8.6. Submittals: A copy of all shop drawings that have been submitted for review must be kept at the construction site for reference. These drawings must bear the appropriate review stamps. The shop drawing review shall not relieve the Contractor of the responsibility of completing the project according to the contract documents. The General Contractor shall review and mark all shop drawings prior to submitting them to the Architect ft

8.7. Project Coordination: It shall be the responsibility of the General Contractor to coordinate with all trades any and all items that are to be integrated into the structural system. Openings or penetrations through, or attachments to the structural system that are not indicated on these drawings shall be the responsibility of the General Contractor and shall be coordinated with the Architect/Engineers. The order of construction is the responsibility of the General Contractor. It is the Contractor's obligation to provide all items necessary for the chosen procedure.

8.8. Contractor shall field verify all dimensions, and conditions. If the contract drawings do not represent actual conditions, Contractor shall notify Architect/Engineer prior to fabrication or construction within that area.

8.9. Notice of Copyright: The structural drawings, plans, schedules, notes and details are hereby copyrighted by Reaveley Engineers. Submission or distribution of documents to meet official regulatory requirements or for similar purposes in connection with the project is not to be construed as publication in derogation of Reaveley Engineers' reserved rights. The documents defining the structure are instruments of service prepared by Reaveley Engineers for one use only. Furthermore, these documents shall not be reproduced, or copied, in whole or in part by the Contractor or subcontractors for preparation of shop drawings or other submittals.

9. Quality Assurance

9.1. Quality Assurance Agency Requirements:
A. The Owner shall engage a qualified Quality Assurance Agency (QAA) to provide all special inspection and quality assurance testing for the project. The QAA shall provide all information necessary for the building official to determine that the agency meets the applicable requirements.
1. The QAA shall be objective, competent and independent from the Contractor responsible for the work being inspected. The agency shall disclose to the building official and the registered design professional in responsible charge possible conflicts of interest so that objectivity can be confirmed.
2. The QAA shall have adequate equipment to perform required tests. The equipment shall be periodically calibrated.
3. The QAA shall employ experienced personnel educated in conducting, supervising and evaluating tests and special inspections. Experience or training shall be considered relevant where the documented experience or training is related in complexity to the same type of special inspection or testing activities for projects of similar complexity and material qualities.
4. The QAA shall send copies of all inspection and testing reports to the building official, Owner, Architect, Engineer and Contractor. Reports shall indicate that the work inspected was or was not completed in conformance to the approved construction documents. Discrepancies shall be brought to the immediate attention of the Contractor for correction. If they are not corrected, the discrepancies shall be brought to the attention of the, Architect and Engineer.
5. The QAA shall submit a final report documenting required special inspections and tests, and correction of any discrepancies noted in the inspections or tests. The final report shall be distributed to the building official, Owner, Architect and Engineer in a timely manner prior to the completion of the project.

9.2. Contractor Responsibilities:
A. The Contractor shall submit a written statement of responsibility to the building official and the Owner or the owner's authorized agent prior to the commencement of work on the systems or components listed in the statement of special inspections. The Contractor's statement of responsibility shall contain acknowledgement or awareness of the special requirements contained in the statement of special inspections.
B. Notification of QAA: The Contractor shall notify the QAA in a timely manner so that inspection and testing may be performed as outlined in the statement of special inspections.

9.3. Structural Observations by the Engineer of Record.
A. The Engineer of Record will perform structural observations at critical phases of the project as listed below. Observations will be made on a periodic basis throughout the construction of the structural system. During this timeframe, site visits will be made periodically. Copies of the Engineer's report will be distributed to the Architect, Contractor, Owner, and QAA.
B. The contractor shall notify the Structural Engineer at least 24 hours in advance before any of the following actions.
1. Placing concrete in any footing.
2. Closing any wall forms.
3. Grouting any masonry.
4. Completing the structural steel framing.
5. Completing the welding of major sections of steel decking.
C. Observation visits to the site by the Engineer's field representatives shall not be construed as inspection or approval of construction.

10. Statement of Special Inspections

10.1. The following materials, systems and components require special inspection or testing per Chapter 17 of the International Building Code (IBC).

10.2. For items requiring continuous inspection, a special inspector must be present onsite during the performance of that task. In most cases, periodic inspections/tests shall be performed prior to commencing the task, intermittently during the task, and at the completion of the task. Frequency marked with (E) designates periodic inspections that must be performed prior to or upon completion of every task.

Structural Steel per IBC Section 1705.2.1, 1705.13.1 & 1705.14.1

Item	Frequency	Detailed Instructions
Prior to Welding (Table N5.4-1, AISC 360-16):		
Welder qualification records	Periodic	Verify welder qualification records and continuity records
Verify welding procedures (WPS) and consumable certificates	Periodic (E)	
Material identification	Periodic	Verify type and grade of material.
Welder identification	Periodic	Confirm a system is in place by which a welder who has welded a joint or member can be identified.
Fit-up groove welds	Periodic	Verify joint preparation, dimensions, cleanliness, tacking, and backing.
Fit-up of CJP welds to HSS T-, Y- and K- joints without backing	Periodic	Verify joint preparation, dimensions, cleanliness and tacking
Access holes	Periodic	Verify configuration and finish.
Fit-up of fillet welds	Periodic	Verify dimensions, cleanliness and tacking.
During Welding (Table N5.4-2, AISC 360-16):		
Use of qualified welders	Periodic	Verify that welders are appropriately qualified.
Control and handling of welding consumables	Periodic	Verify packaging and exposure control.
Cracked tack welds	Periodic	Verify that welding does not occur over cracked tack welds.
Environmental conditions	Periodic	Verify wind speed is within limits as well as precipitation and temperature.
WPS followed	Periodic	Verify items such as settings on welding equipment, travel speed, welding materials, shielding gas type/flow rate, preheat applied, interpass temperature maintained, and proper position.
Welding techniques	Periodic	Verify interpass and final cleaning, each pass is within profile limitations, and quality of each pass.
After Welding (Table N5.4-3, AISC 360-16):		
Welds cleaned	Periodic	Verify that welds have been properly cleaned.
Size, length, and location of welds	Periodic (E)	Verify the size, length and location of welds.
Welds meet visual acceptance criteria	Periodic (E)	Verify that welds meet crack prohibition, base metal fusion, profile, size, undercut, and porosity provisions.
Arc strikes	Periodic (E)	Verify that arc strikes do not exist outside the permanent weld areas.
k-area	Periodic (E)	When welding of doubler plates, continuity plates or stiffeners has been performed in the k-area, visually inspect the web k-area for cracks.
Backing & weld tabs removed	Periodic (E)	If required on the approved construction documents, verify that back and weld tabs are removed.
Repair activities	Periodic (E)	Verify that repair activities are performed in accordance with AISC 360 and AWS D1.1.
Documentation	Periodic (E)	Document the acceptance or rejection of the welded joint or member.
Prohibited welds	Periodic (E)	Verify no prohibited welds have been added without approval of the EOR.
Nondestructive Testing (Section N5.5, AISC 360-16):		
CJP welds (Risk Cat. III or IV)	Periodic (E)	UT testing shall be performed on all CJP groove welds in butt, T- and corner joints subject to transversely applied tension loading in materials 5/16-inch thick or greater.
Welded joints subject to fatigue	Periodic (E)	Welded joints subject to fatigue (see Table A-3.1 of AISC 360) shall have radiographic or UT testing.
Prior to Bolting (Table N5.6-1, AISC 360-16):		
Certifications of fasteners	Continuous	Verify that manufacturer's certificates are available for fastener materials.

Item	Frequency	Detailed Instructions
Fasteners marked	Periodic	Verify that fasteners have been marked in accordance with ASTM requirements.
Proper fasteners for joint	Periodic	Verify grade, type, and bolt length if threads are excluded from the shear plane.
Proper bolting procedure	Periodic	Verify proper procedure is used for the joint detail.
Connecting elements	Periodic	Verify appropriate faying surface condition and hole preparation, if specified, meet requirements.
Pre-installation verification testing	Periodic	Observe and document verification testing by installation personnel for fastener assemblies and methods used.
Proper storage	Periodic	Verify proper storage of bolts, nuts, washers, and other fastener components.
During Bolting (Table N5.6-2, AISC 360-16):		
Fastener assemblies	Periodic	Verify that fastener assemblies are of suitable condition, paced in all holes, and washers and nuts are positioned as required.
Snug-tight prior to pretensioning	Periodic	Verify that joints are brought to snug-tight condition prior to pretensioning operation.
Fastener component	Periodic	Verify that fastener component not turned by wrench is prevented from rotating.
Pretensioned fasteners	Periodic	Verify that fasteners are Pretensioned in accordance with RCSC Specification, progressing systematically from the most rigid point toward the free edges.
After Bolting (Table N5.6-3, AISC 360-16):		
Documentation	Periodic (E)	Document the acceptance or rejection of bolted connections.
Other Steel Inspections (Section N5.8, AISC 360-16: Table J8.1, J10.1, AISC 341-16):		
Structural steel details	Periodic	All fabricated steel or steel frames shall be inspected to verify compliance with the details shown in the approved construction documents, such as braces, stiffeners, member locations, and proper application of joint details at each connection.
Anchor rods and other embedments supporting structural steel	Periodic	Shall be on the premises during the placement of anchor rods and other embedments supporting structural steel for compliance with construction documents. Verify the diameter, grade, type, and length of the anchor rod or embedded item, and the extent or depth of embedment prior to placement of concrete.
Galvanized structural steel	Periodic	Verify that exposed cut surfaces of galvanized structural steel does not include cracks prior to galvanizing the surface.
Protected zones	Periodic	Verify that no holes or unapproved attachments are made within the protected zone *(see Table J8.1 of AISC 341-16).*

Steel Roof and Floor Decks per ISC Section 1705.2.2 and SDI QA/QC - 2017

Item	Frequency	Detailed Instructions
Steel Roof and Floor Decks Prior to Placement (IBC 1705.2.2 and Table 1.1, SDI QA/QC 2017):		
Materials	Periodic (E)	Verify compliance of deck and all deck accessories with approved construction documents, including profiles, material properties, and base metal thickness.
Documentation	Periodic (E)	Document acceptance or rejection of deck and deck accessories
Steel Roof and Floor Decks After Placement (IBC 1705.2.2 and Table 1.2, SDI QA/QC 2017):		
Compliance with construction documents	Periodic (E)	Verify compliance of deck and all deck accessories installation with construction documents. Verify deck materials are represented by the mill certifications that comply with the construction documents.
Document acceptance or rejection of deck and deck accessories	Periodic (E)	
Steel Roof and Floor Decks Prior to Welding (IBC 1705.2.2 and Table 1.3, SDI QA/QC 2017):		
Welding procedure specifications available	Periodic	Verify that WPS is available.
Certifications of welding consumables	Periodic	Verify that manufacturer certifications for welding consumables are available.

Item	Frequency	Detailed Instructions
Material identification	Periodic	Verify type and grade of materials to be welded
Welding equipment	Periodic	
Steel Roof and Floor Decks During Welding (IBC 1705.2.2 and Table 1.4, SDI QA/QC 2017):		
Use of qualified welders	Periodic	Verify that welders are appropriately qualified.
Control and handling of welding consumables	Periodic	Verify packaging and exposure control.
Environmental conditions	Periodic	Verify wind speed is within limits as well as precipitation and temperature.
WPS followed	Periodic	Verify items such as settings on welding equipment, travel speed, welding materials, shielding gas type/flow rate, preheat applied, interpass temperature maintained, and proper position.
Steel Roof and Floor Decks After Welding (IBC 1705.2.2 and Table 1.5, SDI QA/QC 2017):		
Size, length, and location of welds	Periodic	Verify size and location of welds, including support, sidelap, and perimeter welds.
Welds meet visual acceptance criteria	Periodic (E)	Verify weld meets visual acceptance criteria based upon weld/base-metal fusion, weld profiles, weld size, undercut, and porosity.
Repair activities	Periodic (E)	Verify that repair activities are acceptable.
Document acceptance or rejection of welds	Periodic (E)	
Steel Roof and Floor Decks Prior to Mechanical Fastening (IBC 1705.2.2 and Table 1.6, SDI QA/QC 2017):		
Pre-installation verification	Periodic	Verify manufacturer installation instructions are available for mechanical fasteners as well as the proper tools and storage for the fasteners.
Steel Roof and Floor Decks During Mechanical Fastening (IBC 1705.2.2 and Table 1.7, SDI QA/QC 2017):		
Fastener Placement	Periodic	Verify that fasteners are positioned as required and installed in accordance with the manufacturer's instructions.
Steel Roof and Floor Decks After Mechanical Fastening (IBC 1705.2.2 and Table 1.8, SDI QA/QC 2017):		
Spacing, type and installation of fasteners	Periodic (E)	Verify the spacing, type and installation of support, sidelap and perimeter fasteners.
Repair activities	Periodic (E)	Verify that repair activities are acceptable.
Document acceptance or rejection of mechanical fasteners	Periodic (E)	

Open-web Steel Joists and Joist Girders per IBC 1705.2.3

Item	Frequency	Detailed Instructions
End connections – welded or bolted	Periodic	Visual inspection to confirm that end connections conform to the approved construction documents.
Bridging – horizontal or diagonal	Periodic	Visual inspection to confirm that bridging is provided per the approved construction documents.

Concrete Construction per IBC Sections 1705.3 & 1705.12

Item	Frequency	Detailed Instructions
Reinforcing steel	Periodic	Verify prior to placing concrete that reinforcing is of specified type, grade and size; that it is free of oil, dirt and rust; that it is located and spaced properly; that hooks, bends, ties, stirrups and supplemental reinforcement are placed correctly; that lap lengths, stagger and offsets are provided; that minimum clear spacing between bars at lap splices are maintained; and that all mechanical connections are installed per the manufacturer's instructions and/or evaluation report.
Welding of reinforcing steel	Periodic	Visually inspect all welds and also verify weldability of reinforcing steel based upon carbon equivalent and in accordance with AWS D1.4.
Cast-in bolts & embeds	Periodic	Inspection of anchors or embeds cast in concrete is required when allowable loads have been increased or where strength design is used.
Post-installed adhesive anchors installed in horizontally or upwardly inclined orientations to resist sustained tension loads	Continuous	All post-installed anchors/dowels shall be specially inspected as required by the approved ICC-ES report. Horizontally or upwardly inclined anchors that resist sustained

Item	Frequency	Detailed Instructions
Post-installed mechanical anchors and adhesive anchors not defined above	Periodic	tension loads require continuous inspection and approved installers.
Use of required mix design	Periodic	Verify that all mixes used comply with the approved construction documents; ACI 318: Ch. 19, 26.4.3-26.4.4; and IBC 1904.1, 1908.2, 1908.3.
Concrete sampling for strength tests, slump, air content, and temperature	Continuous	Samples for strength tests shall be taken in accordance with ASTM C172, cured per ASTM C31 and tested in accordance with ASTM C39 by a testing agency complying with ASTM C1077. Acceptance criteria for strength tests shall be per ACI 318 Section 26.12.3. For each mix placed, samples shall be taken not less than once a day, nor less than once for each 150 yd^3 of concrete, nor less than once for each 5000 ft^2 of surface area for slabs or walls. At the time fresh concrete is sampled to fabricate specimens for strength tests, perform slump and air content tests and determine the temperature of the concrete.
Concrete	Continuous	
Curing temperature and techniques	Periodic	Verify that the ambient temperature for concrete is kept at > 50°F for at least 7 days after placement. High-early-strength concrete shall be kept at > 50°F for at least 3 days. Accelerated curing methods may be used (see ACI 318: 26.4.7-26.4.9). The ambient temperature for shotcrete shall be > 40°F for the same period of time as noted for concrete. Shotcrete shall be kept continuously moist for at least 24 hours after shotcreting. All concrete materials, reinforcement, forms, fillers, and ground shall be free from frost. In hot weather conditions ensure that appropriate measures are taken to avoid plastic shrinkage cracking and that the specified water/cement ratio is not exceeded.
In-situ strength verification	Periodic	Verify that adequate strength has been achieved prior to the removal of shores and forms or the stressing of post-tensioned tendons.
Formwork	Periodic	Verify that the forms are placed plumb and conform to the shapes, lines, and dimensions of the members as required by the approved construction documents.
Welding of Reinforcing Steel (IBC Table 1705.3):		
Verification of weldability	Periodic	Verify weldability of reinforcing steel other than A706 based upon carbon equivalent and in accordance with AWS D1.4. Continuous inspection is required for welding of reinforcing steel used in intermediate or special concrete moment frames, boundary elements of special structural walls or shear reinforcement.
Other reinforcing steel	Periodic	Visually inspect all welds in accordance with AWS D1.4.
Single-pass fillet welds, 5/16" max	Periodic	
All other welds	Continuous	

Masonry Construction per IBC Section 1705.4

Item	Frequency	Detailed Instructions
Prior to Construction (Table 3, TMS-602-16):		
Review material certificates, mix designs, test results and construction procedures	Periodic	Verify that materials conform to the approved construction documents. Mix design, test results, material certificates, and construction procedures should be submitted to inspector for review. Mortar mix designs shall conform to ASTM C 270 while grout shall conform to ASTM C 476. Material certificates shall be provided for reinforcement; anchors, ties, fasteners, and metal accessories; masonry units; mortar and grout materials. Construction procedures for cold-weather or hot-weather construction shall be reviewed.
Verify f'_m prior to construction	Periodic	Determine the compressive strength for each wythe by the "unit strength method" or by the "prism test method" as specified in Section 1.4B of ACI 530.1-13 prior to construction.
As Masonry Construction Begins (Table 4, TMS-602-16):		
Proportions of site-prepared mortar	Periodic	Verify that mortar is of the type and color specified on the construction documents, that it conforms to ASTM C 270, and that it is mixed in accordance with Article 2.6 A of TMS-602-16.
Reinforcement, connectors, and anchorages	Periodic	Verify that reinforcement, connectors, and anchorages are of the proper grade, type and size in accordance with Article 3.4 of TMS-602-16. Prestressing tendons shall be placed per Article 3.6 A.
Sample panel	Periodic	Verify that sample panels are properly constructed and that subsequent work conforms per Article 1.6 D of TMS-602-16. (If Risk Category IV this should be performed on a continuous basis.)
Construction of mortar joints	Periodic	Verify that mortar joints comply with Article 3.3 B of TMS-602/ACI 530.1-13.
Preparation of required grout specimens, mortar specimens and/or prisms shall be observed	Periodic	If the prism test method is used a minimum of three prisms shall be constructed in accordance with ASTM C1314. If the unit strength method is selected the compressive strength of the grout shall be determined per ASTM C1019 (not required if grout complies with ASTM C478).
Prior to Grouting (Table 4, TMS-602-16):		
Grout space	Periodic	Verify that grout space is free of mortar droppings, debris, loose aggregate, and other deleterious materials and that cleanouts are provided per Article 3.2 D and 3.2 F of TMS-602-16.
Grade, type, and size of reinforcement and anchor bolts	Periodic	Verify that reinforcement, joint reinforcement, wall ties, anchor bolts and veneer anchors comply with the approved construction documents and Section 1.6 of TMS 402/ACI 530-13.
Placement of reinforcement and connectors and anchor bolts	Periodic	Verify that reinforcement, joint reinforcement, wall ties, anchor bolts and veneer anchors are installed in accordance with the approved construction documents and Articles 3.2 E and 3.4 of TMS-602-16.
Proportions of site-prepared grout	Periodic	Verify that grout is proportioned per ASTM C 476 and has a slump between 8-11 inches. Self-consolidated grout shall not be proportioned onsite. (see Articles 2.6 B and 2.4 G.1.b of TMS-602-16.)
Placement of masonry units and construction of mortar joints	Periodic	Verify that face shells and head joints are fully mortared and that vertical cells are aligned and unobstructed openings for grout are provided. All units are to be clean and placed while mortar is soft and plastic. Verify that mortar joints are placed in accordance with Article 3.3 B of TMS 602/ACI 530.1-13.
During Masonry Construction (Table 4, TMS-602-16):		
Materials and procedures	Periodic	Ensure that materials and procedures conform to the approved construction documents and Article 1.5 of TMS-602-16.
Placement of masonry units and mortar joint construction	Periodic	Verify that masonry units are properly placed and that mortar joint construction conforms to Article 3.3 B of TMS-602-16.
Size and location of structural elements	Periodic	Verify the locations of structural elements with respect to the approved plans and confirm that tolerances meet the requirements of Article 3.3 F of TMS-602-16.
Type, size, and location of anchors, including other details of anchorage of masonry to structural members, frames, or other construction.	Periodic	Verify that correct anchorages and connections are provided per the approved plans and Sections 1.2.1, 6.2.1 and 6.3.1 of TMS-402-16.
Welding of reinforcement	Continuous	
Preparation, construction, and protection of masonry during cold weather (<40°F) or hot weather (>90°F).	Periodic	Verify that cold-weather construction is performed in accordance with Article 1.8 C of TMS-602-16 and hot weather construction per Article 1.8 D of TMS-602-16.
Observation of grout specimens, mortar specimens, and/or prisms	Periodic	Confirm that specimens/prisms are performed as required by Article 1.4 B of TMS-602-16.
Self-consolidating grout	Continuous	
Minimum Testing:		
Verification of Slump Flow and Visual Stability Index (VSI) for self-consolidating grout	Periodic	Compressive strength tests should be performed in accordance with ASTM C 1019 for slump flow and ASTM C 1611 for VSI.
Verification of f'_m	Periodic	Determine the compressive strength for each wythe by the "unit strength method" or by the "prism test method" as specified in Article 1.4 B of TMS 602-16 prior to construction. (For Risk Category IV buildings this should be verified at every 5,000ft^2 of construction.)
Verification of proportions of materials in premixed or pre-blended mortar and grout	Periodic	Verify that proportions for mortar meet ASTM C 270 and proportions for grout meet ASTM C 476.
Post-installed anchors or dowels		All post-installed anchors/dowels shall be specially inspected as required by the approved ICC-ES report.

Cold-Formed Steel Light-Frame Construction per IBC Sections 1705.2.4, 1705.11.2 & 1705.12.3, and 1705.12.9

Item	Frequency	Detailed Instructions
Wind-Force-Resisting Systems (WFRS)	Periodic	Periodic inspections of welding operations. If fastener spacing is < 4"o.c.: Verify that proper screw attachment, bolting, anchoring and other fastening of shear walls, diaphragms, drag struts, braces, shear panels and holdowns has occurred. ***Performed by code inspection firm.***

Soils per IBC Section 1705.6

Item	Frequency	Detailed Instructions
Verify subgrade is adequate to achieve design bearing capacity	Periodic	Prior to placement of concrete.
Verify excavations extend to proper depth and material	Periodic	Prior to placement of compacted fill or concrete.
Verify that subgrade has been appropriately prepared prior to placing compacted fill	Periodic	Prior to placement of compacted fill.
Perform classification and testing of compacted fill materials	Periodic	All materials shall be checked at each lift for proper classifications and gradations not less than once for each 10,000ft^2 of surface area.
Verify proper materials, densities and lift thicknesses during placement and compaction.	Continuous	

Architectural Components (Seismic Design Category D, E, or F) per IBC Sections 1705.13.5

Item	Frequency	Detailed Instructions
Erection and fastening of exterior cladding or interior and exterior veneers	Periodic	Verify appropriate materials, fasteners, and attachment at commencement of work and at completion. **Performed by code inspection firm.** (Not required if height of wall < 30 ft above grade or walking surface, or less than 5 psf)
Erection and fastening of interior and exterior nonbearing walls	Periodic	Verify appropriate materials, fasteners and attachment at commencement of work and at completion. ***Performed by code inspection firm.*** (Not required if height of wall < 30 ft above grade or walking surface, or less than 15 psf)
Access floors	Periodic	Verify that anchorage complies with approved construction documents. Inspection of post-installed anchors shall comply with approved ICC-ES report. **Performed by code inspection firm.**

MHTN ARCHITECTS
MHTN Architects, Inc.
280 South 400 West
Suite 250
Salt Lake City, Utah 84101
Telephone (801) 595-6700
www.mhtn.com

REAVELEY Engineers
515 East 100 South, Suite 1200
Salt Lake City, Utah 84102
801 486 3883
www.reaveley.com

JORDAN SCHOOL DISTRICT
JORDAN LEARNING CENTER
3706 WEST 9800 SOUTH
SOUTH JORDAN, UT 84095

©2023 MHTN ARCHITECTS, INC.
Confidentiality Notice:
This document is intended for use on the Project identified herein by individuals or entities specifically listed in the design, permitting, bidding and construction of the Project. MHTN Architects, Inc. grants limited rights to distribute and reproduce this document for this express purpose only. Distribution, printing or copying this document for purposes other than those indicated is strictly prohibited. If a digital copy of this document is received in error, please delete it.

SEAL

PROFESSIONAL ENGINEER · STRUCTURAL · No. 8892202 · JUSTIN D. NADAULD · STATE OF UTAH

08/29/24

MHTN PROJECT NO. 2024528

Original drawing is 30 x 42. Do not scale contents of this drawing.

REVISIONS
CONTRACTOR TO VERIFY DRAWINGS IN FIELD USE REFLECT LAST REVISION DATE.

NO.△	DATE	DESCRIPTION

ISSUE
CONSTRUCTION DOCUMENTS 100%
08/29/24

SHEET NAME
GENERAL NOTES

SHEET NUMBER
SE002

Autodesk Docs://2024528 JSD Retail Remodel/524 2024528 JSD Retail Remodel.rvt
8/27/2024 7:13:04 PM

PLAN LEGEND

- FOOTING STEP
- FOOTING - CONTINUOUS
- FOOTING - THICKENED SLAB
- FOOTING - SQUARE FOOTING - RECTANGULAR FOOTING - MAT FOOTING
- CHANGE IN ELEVATION
- SLAB BLOCK-OUT AT COLUMN
- SLAB CONTROL/CONSTRUCTION JOINT
- SPECIAL SLAB OR DECK AREA
- SPECIAL SLAB OR DECK AREA
- SPECIAL SLAB OR DECK AREA
- RECESSED/DEPRESSED SLAB
- OPENING
- CONCRETE HOUSEKEEPING PAD
- INDICATES ROOF DAVIT ARM BASE
- INDICATES WINDOW WASHING TIE-BACK
- CONCRETE BEAM
- CONCRETE JOIST - ONE WAY PANS
- CONCRETE JOIST - TWO WAY PANS
- CONCRETE SUSPENDED SLAB
- CONCRETE OVER STEEL DECK
- STEEL DECK
- STEEL GRATE
- WOOD DIAPHRAGM SHEATHING
- CONCRETE WALL
- CONCRETE WALL - RECESSED (FDTN PLAN) CONCRETE LINTEL (FRAMING PLAN)
- CONCRETE WALL - RECESSED AT DOOR
- CONCRETE PIER IN CONCRETE WALL. TOP OF PIER RECESSED BELOW SLAB.
- CONCRETE COLUMN
- CONCRETE JAMB COLUMN POURED MONOLITHIC WITH CONCRETE WALL
- MASONRY WALL
- MASONRY WALL - RECESSED (FDTN PLAN) MASONRY LINTEL (FRAMING PLAN)
- MASONRY COLUMN IN MASONRY WALL
- NON-BEARING MASONRY WALL
- NON-BEARING MASONRY LINTEL
- STEEL STUD WALL - STRUCTURAL
- STEEL HEADER IN STEEL STUD WALL
- BRICK WALL
- BRICK WALL - RECESSED (FDTN PLAN) BRICK LINTEL (FRAMING PLAN)
- BRICK COLUMN IN BRICK WALL
- WOOD STUD WALL
- WOOD HEADER IN WOOD STUD WALL
- NON-BEARING WOOD WALL. SEE ARCH
- STEEL/WOOD BEAM OR GIRDER
- STEEL/WOOD JOIST OR PURLIN
- STEEL BRACED FRAME - ABOVE
- STEEL BRACED FRAME
- STEEL BEAM OR GIRDER
- STEEL JOIST OR PURLIN
- STEEL ANGLE BRACE / KICKER. SEE __/__ FOR SLAB EDGE KICKER. SEE __/__ FOR FRAME BRACE
- CROSS BRIDGING
- HORIZONTAL BRIDGING
- STEEL COLUMN - TUBE (HSS)
- STEEL COLUMN - WIDE FLANGE
- STEEL COLUMN - PIPE (HSS)
- WOOD COLUMN
- EXISTING FOOTING - CONTINUOUS
- EXISTING FOOTING - THICKENED SLAB
- EXISTING FOOTING - SQUARE, RECTANGULAR, OR MAT
- EXISTING CONCRETE SHEAR WALL, FOUNDATION WALL OR RETAINING WALL
- EXISTING OPENING THROUGH CONCRETE WALL
- EXISTING CONCRETE PIER IN CONCRETE WALL. PIER RECESSED BELOW SLAB.
- EXISTING CONCRETE COLUMN
- NEW OPENING THROUGH EXISTING CONCRETE WALL
- EXISTING MASONRY WALL
- EXISTING OPENING THROUGH MASONRY WALL
- NEW OPENING THROUGH EXISTING MASONRY WALL
- EXISTING MASONRY COLUMN IN MASONRY WALL
- EXISTING STEEL COLUMN - TUBE
- EXISTING STEEL COLUMN - WIDE FLANGE
- EXISTING STEEL COLUMN - PIPE
- EXISTING STEEL BRACED FRAME
- EXISTING SLAB BLOCK-OUT AT COLUMN
- EXISTING SLAB CONTROL/CONSTRUCTION JOINT
- EXISTING STEEL BEAM OR GIRDER
- EXISTING STEEL JOIST OR PURLIN
- EXISTING CROSS BRIDGING
- EXISTING HORIZONTAL BRIDGING
- EXISTING TO BE REMOVED
- EXISTING OPENING

STEEL FRAMING MEMBER DESIGNATION

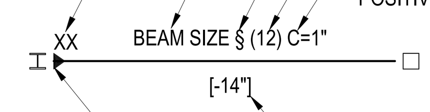

TEXT INDICATES ADDITIONAL REQUIREMENTS FOR BOLTS AT SPECIFIED CONNECTION:
SC = SLIP CRITICAL BOLTS
PT = FULLY PRETENSIONED BOLTS
SS = SHORT SLOTTED HOLES
LS = LONG SLOTTED HOLES

INDICATES STEEL JOIST, BEAM OR GIRDER SIZE

INDICATES MEMBER IS PART OF LFRS, (USE PT BOLTS AT EACH END UNO)

NUMBER OF HEADED STUDS ON BEAM

POSITIVE OR UPWARD CAMBER AT MIDSPAN

WHERE NOTED, NUMBER INDICATES DIMENSION FROM TOP OF STEEL ELEVATION REFERENCED ON PLAN (TOST).
SEE ARCH FOR DECK BEARING ELEVATIONS AT SLOPED ROOF FRAMING.

CONNECTION TYPE. SEE FRAMING CONNECTION LEGEND. IF ABSENT, PROVIDE TYPICAL SINGLE PLATE CONNECTION.

SEE GENERAL STRUCTURAL NOTES FOR BOLT REQUIREMENTS

STEEL FRAMING CONNECTION LEGEND

GRAVITY BEAM MOMENT CONNECTION B2/SF502 AND A1/SF502.

ABBREVIATIONS

@	AT
AB	ANCHOR BOLT (S)
ABV	ABOVE
ALT	ALTERNATE
APPROX	APPROXIMATE
ARCH	ARCHITECT(URAL)
BLDG	BUILDING
BLW	BELOW
BM	BEAM
BOT	BOTTOM
BRG	BEARING
BTWN	BETWEEN
CJ	CONSTRUCTION JOINT OR CONTROL JOINT
CJP	COMPLETE JOINT PENETRATION
CMU	CONCRETE MASONRY UNIT
COL	COLUMN
CONC	CONCRETE
CONST	CONSTRUCTION
CONT	CONTINUOUS
CONTR	CONTRACTOR
CTR	CENTER
D.B.	DECK BEARING
db	DIAMETER OF REINFORCING BAR
DBA	DEFORMED BAR ANCHORS
DBL	DOUBLE
DET	DETAIL
DIA (OR Ø)	DIAMETER
DIAG	DIAGONAL
DIM	DIMENSION
DK	DECK
DN	DOWN
DWG	DRAWING
DWL	DOWEL
E.F.	EACH FACE
E.J.	EXPANSION JOINT (SEISMIC SEPARATION JOINT)
E.W.	EACH WAY
EA	EACH
EL	ELEVATION
ELEC	ELECTRICAL
ELEV	ELEVATOR
ENG	ENGINEER
EQ	EQUAL
EQUIP	EQUIPMENT
EXIST (E)	EXISTING
EXP	EXPANSION / EXPOSED
EXT	EXTERIOR
F.D.	FLOOR DRAIN
F.F.	FINISH FLOOR
F.V.	FIELD VERIFY
FDTN	FOUNDATION
FIN	FINISH
FL	FLOOR
FT	FOOT
FTG	FOOTING
GA	GAUGE
GALV	GALVANIZED
GLB	GLU-LAMINATED BEAM
GR	GRADE
GSN	GENERAL STRUCTURAL NOTES
HB	HORIZONTAL BRIDGING
HORIZ	HORIZONTAL
HSA	HEADED STUD ANCHORS
HSS	HOLLOW STRUCTURAL STEEL
HT	HEIGHT
I.F.	INSIDE FACE
IBC	INTERNATIONAL BUILDING CODE
ICC	INTERNATIONAL CODE COUNCIL
IN	INCH
INSUL	INSULATION
INT	INTERIOR
JST	JOIST
JT	JOINT
K	KIPS - 1,000 POUNDS
KLF	KIPS PER LINEAL FOOT
KSF	KIPS PER SQUARE FOOT
KSI	KIPS PER SQUARE INCH
LBS	POUNDS
Ld, Lt, Lsb, Lsbt, Ldc, Lsc	SEE CONCRETE REINFORCING BAR DEVELOPMENT AND LAP LENGTH SCHEDULE
LF	LINEAL FOOT
LFRS	LATERAL FORCE RESISTING SYSTEM (SFRS & WFRS)
LLH	LONG LEG HORIZONTAL
LLV	LONG LEG VERTICAL
LSH	LONG SIDE HORIZONTAL
LSV	LONG SIDE VERTICAL
MAS	MASONRY
MAX	MAXIMUM
MCJ	MASONRY CONTROL JOINT
MECH	MECHANICAL
MFGR	MANUFACTURER
MIN	MINIMUM
MISC	MISCELLANEOUS
NIC	NOT IN CONTRACT
NORM	NORMAL
NTS	NOT TO SCALE
O.C.	ON CENTER
O.F.	OUTSIDE FACE
OPNG	OPENING
OPP	OPPOSITE
OWSJ	OPEN WEB STEEL JOIST
P.T.	POST-TENSIONED
PAF	POWDER ACTUATED FASTENER
PCF	POUNDS/CUBIC FOOT
PJP	PARTIAL JOINT PENETRATION
PL	PLATE
PLF	POUNDS/LINEAL FOOT
PNL	PANEL
PSF	POUNDS/SQ FOOT
PSI	POUNDS/SQ INCH
R.D.	ROOF DRAIN
REINF	REINFORCING
REQD	REQUIRED
SDS	SELF-DRILLING SCREW
SFRS	SEISMIC FORCE RESISTING SYSTEM
SHT	SHEET
SI	SPECIAL INSPECTION (SP. INSP.)
SIM	SIMILAR
SOG	SLAB ON GRADE
SQ	SQUARE
STAG	STAGGERED
STD	STANDARD
STIFF	STIFFENER
STL	STEEL
STRUCT	STRUCTURAL
T & B	TOP AND BOTTOM
T.O.	TOP OF
TEMP	TEMPERATURE
THDS	THREADS
TOC	TOP OF CONCRETE
TOCP	TOP OF CONCRETE PIER
TOF	TOP OF FOOTING
TOS	TOP OF SLAB
TOST	TOP OF STEEL
TOW	TOP OF WALL
TYP	TYPICAL
UNO	UNLESS NOTED OTHERWISE
VERT	VERTICAL
W.P.	WORK POINT
W/	WITH
WF	WIDE FLANGE
WFRS	WIND FORCE RESISTING SYSTEM
WT	WEIGHT
WWF	WELDED WIRE FABRIC
YD	YARD

PLAN MARKS

BF-#	BRACED FRAME
CB-#	CONCRETE BEAM
CC-#	CONCRETE COLUMN
CCSS-#	CANTILEVERED CONCRETE SUSPENDED SLAB
CDP-#	CONCRETE DRILLED PIER
CFW-#	CONCRETE FOUNDATION WALL
CGB-#	CONCRETE GRADE BEAM
CJ-#	CONCRETE JOIST
CJC-#	CONCRETE JAMB COLUMN
CL-#	CONCRETE LINTEL
CP-#	CONCRETE PIER
CRW-#	CONCRETE RETAINING WALL
CSG-#	CONCRETE SLAB ON GRADE
CSH-#	CONCRETE SHEAR HEAD
CSS-#	CONCRETE SUSPENDED SLAB
CSW-#	CONCRETE SHEAR WALL
CW-#	CONCRETE WALL
FC#	CONTINUOUS FOOTING
FM#	MAT FOOTING
FR#	RECTANGULAR FOOTING
FS#	SQUARE FOOTING
FTS#	THICKENED SLAB FOOTING
HD-#	HOLD DOWN ANCHOR
MC-#	MASONRY COLUMN
MF-#	MOMENT FRAME
ML-#	MASONRY LINTEL
MP-#	MASONRY PIER
MW-#	MASONRY WALL
PTB-#	POST-TENSIONED CONCRETE BEAM
SBP-#	STEEL BASE PLATE
SC-#	STEEL COLUMN
SCP-#	STEEL CAP PLATE
SD-#	STEEL DECK
SDA-#	STEEL DECK ATTACHMENT
SG-#	STEEL GIRDER
SJ-#	STEEL JOIST
SND-#	SNOW DRIFT
WB-#	WOOD BEAM
WBW-#	WOOD BEARING WALL
WC-#	WOOD COLUMN
WD-#	WOOD DIAPHRAGM
WJ-#	WOOD JOIST
WSW-#	WOOD SHEAR WALL

STRUCTURAL DRAWING LIST

SHT NO.	SHT NAME
SE001	GENERAL NOTES
SE002	GENERAL NOTES
SE003	LEGENDS & ABBREVIATIONS
SB101A	FOOTING AND FOUNDATION PLAN-AREA A
SB101B	FOOTING & FOUNDATION PLAN-AREA B
SB501	TYPICAL FOOTING & FOUNDATION DETAILS
SB502	TYPICAL FOOTING & FOUNDATION DETAILS
SB601	CONCRETE SCHEDULES
SB602	REINFORCING SCHEDULES
SB611	MASONRY SCHEDULES
SF101	OVERALL ROOF PLAN
SF101A	ROOF FRAMING PLAN- AREA A
SF101B	ROOF FRAMING PLAN-AREA B
SF201	STRUCTURAL ELEVATIONS
SF401	ENLARGED STRUCTURAL PLANS
SF501	TYPICAL ROOF FRAMING DETAILS
SF502	ROOF FRAMING DETAILS
SF503	ROOF FRAMING DETAILS
SF504	NEW WALL OPENINGS
SF505	EXTERIOR STEEL STUD DETAILS
SF601	TYPICAL STEEL FRAMING SCHEDULES
SF602	STEEL DECK SCHEDULES

MHTN ARCHITECTS
MHTN Architects, Inc.
280 South 400 West
Suite 250
Salt Lake City, Utah 84101
Telephone (801) 595-6700
www.mhtn.com

REAVELEY Engineers
515 East 100 South, Suite 1200
Salt Lake City, Utah 84102
801 486 3883
www.reaveley.com

JORDAN SCHOOL DISTRICT

JORDAN LEARNING CENTER

3706 WEST 9800 SOUTH
SOUTH JORDAN, UT 84009

©2023 MHTN ARCHITECTS, INC.
Confidentiality Notice:
This document is intended for use on the Project identified herein by individuals and companies involved in the design, permitting, bidding and construction of the Project. MHTN Architects, Inc. grants limited rights to distribute and reproduce this document for this express purpose only. Distribution, printing or copying this document for purposes other than those indicated is strictly prohibited. If a digital copy of this document is received in error, please delete it.

SEAL
PROFESSIONAL STRUCTURAL ENGINEER No. 4859789-2203 JUSTIN D. NADAULD STATE OF UTAH
08/29/24

MHTN PROJECT NO. 2024528

Original drawing is 30 x 42. Do not scale contents of this drawing.

REVISIONS
CONTRACTOR TO VERIFY DRAWINGS IN FIELD USE REFLECT LAST REVISION DATE.

NO.	DATE	DESCRIPTION

ISSUE
CONSTRUCTION DOCUMENTS 100%
08/29/24

SHEET NAME
LEGENDS & ABBREVIATIONS

SHEET NUMBER
SE003

Autodesk Docs://2024528 JSD Retail Remodel/S24 2024528 JSD Retail Remodel.rvt
8/27/2024 7:12:52 PM

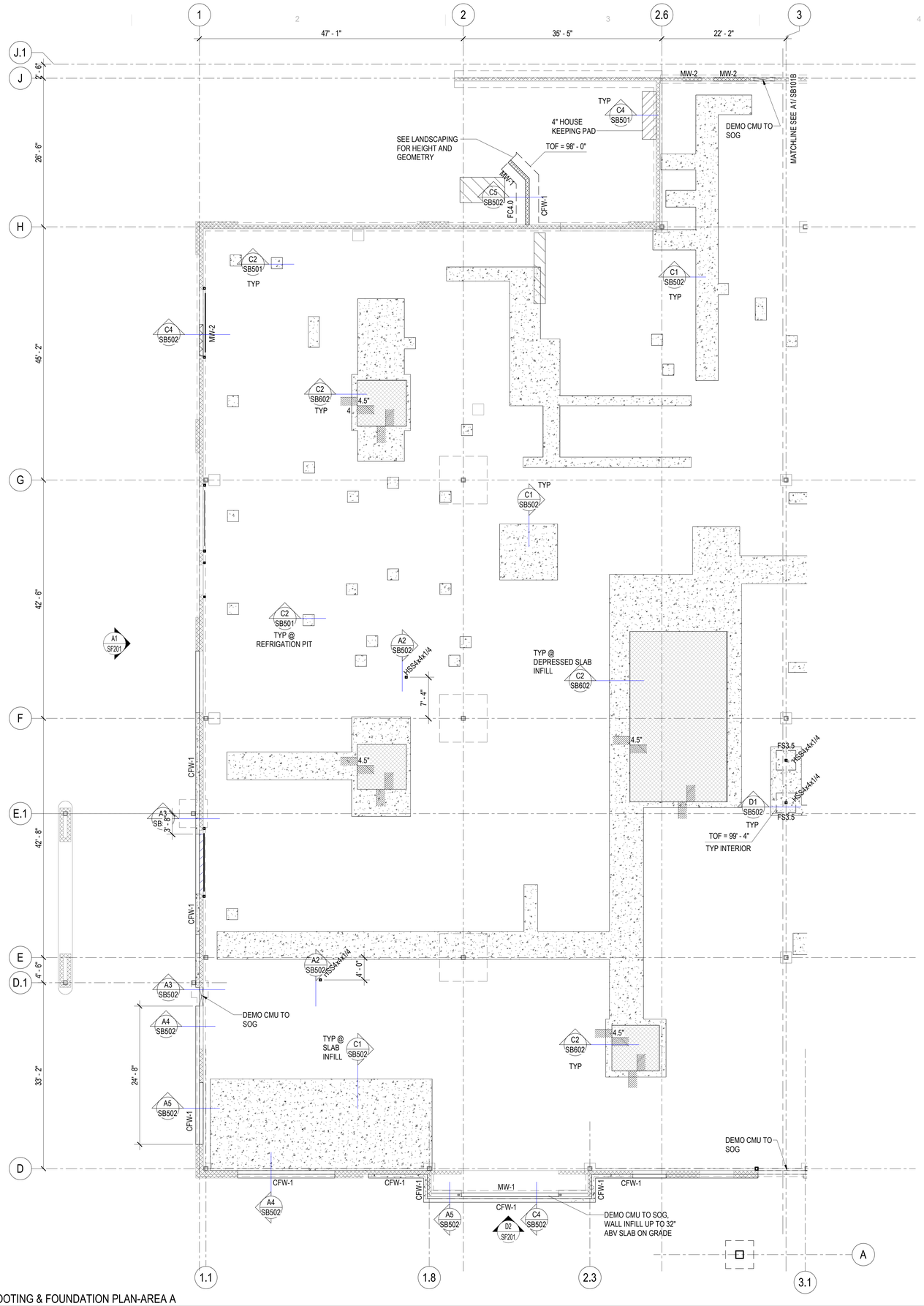

A1 SB101A FOOTING & FOUNDATION PLAN-AREA A

SCALE: 1/8" = 1'-0"

FOOTING & FOUNDATION PLAN NOTES

1. SEE ARCHITECTURAL, CIVIL AND LANDSCAPE DRAWINGS FOR EXTERIOR CONCRETE RETAINING AND / OR SITE WALLS NOT SHOWN ON THE STRUCTURAL DRAWINGS.

2. SEE TYPICAL STEP DETAIL AT CONTINUOUS FOOTING AND TYPICAL STEP DETAIL AT MAT FOOTING FOR REINFORCING REQUIREMENTS D1/SB501 .

3. PROVIDE REINFORCEMENT AT WALL ENDS, INTERSECTIONS AND OPENINGS PER TYPICAL DETAILS D2/SB601 AND C2/SB601.

4. DOWEL ALL CONCRETE WALLS TO FOOTING PER TYPICAL DETAIL C4/SB501.

5. PROVIDE COMPACTED STRUCTURAL FILL UNDER ALL CONCRETE FOOTINGS PER TYPICAL DETAIL A5/SB501.

6. WHERE REQUIRED, DEMO THE EXISTING SLAB ON GRADE AND REPLACE WITH NEW CONCRETE MATCHING THE THICKNESS OF THE EXISTING SLAB PER DETAIL C1/SB502 .

7. SBP-# INDICATES THE COLUMN BASEPLATE TYPE. SEE SCHEDULE ON SF602

EXISTING BUILDING NOTES

1. THE CONTRACTOR SHALL FIELD VERIFY ALL EXISTING CONDITIONS PRIOR TO DETAILING, FABRICATING, ERECTING OR INSTALLING ANY STRUCTURAL ELEMENT. ALL DISCREPANCIES SHALL BE BROUGHT TO THE ATTENTION OF THE DESIGN TEAM IN A TIMELY MANNER SUCH THAT WORK WILL NOT BE DELAYED.

2. THE CONTRACTOR SHALL PROVIDE ADEQUATE SHORING OF EXISTING STRUCTURE DURING CONSTRUCTION.

3. INFILL ROOF DECK OPENINGS, SEE TYP DETAIL B3/SF503 .

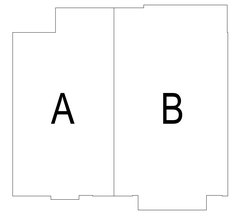

KEY PLAN

MHTN ARCHITECTS
MHTN Architects, Inc.
280 South 400 West
Suite 250
Salt Lake City, Utah 84101
Telephone (801) 595-6700
www.mhtn.com

REAVELEY Engineers
515 East 100 South, Suite 1200
Salt Lake City, Utah 84102
801 486 3883
www.reaveley.com

JORDAN SCHOOL DISTRICT

JORDAN LEARNING CENTER

3706 WEST 9800 SOUTH
SOUTH JORDAN, UT 84009

©2023 MHTN ARCHITECTS, INC.

Confidentiality Notice:
This document is intended for use on the Project identified herein by individuals and companies involved in the design, permitting, bidding and construction of the Project. MHTN Architects, Inc. grants limited rights to distribute and reproduce this document for this express purpose only. Distribution, printing or copying this document for purposes other than those indicated is strictly prohibited. If a digital copy of this document is received in error, please delete it.

SEAL

PROFESSIONAL STRUCTURAL ENGINEER
No. 10187802-5202
JUSTIN D. NADAULD
STATE OF UTAH
08/29/24

MHTN PROJECT NO. 2024528

Original drawing is 30 x 42. Do not scale contents of this drawing.

REVISIONS
CONTRACTOR TO VERIFY DRAWINGS IN FIELD USE REFLECT LAST REVISION DATE.

NO.	DATE	DESCRIPTION

ISSUE
CONSTRUCTION DOCUMENTS 100%
08/29/24

SHEET NAME
FOOTING AND FOUNDATION PLAN-AREA A

SHEET NUMBER
SB101A

Autodesk Docs://2024528 JSD Retail Remodel/S24 2024528 JSD Retail Remodel.rvt
8/27/2024 7:12:53 PM

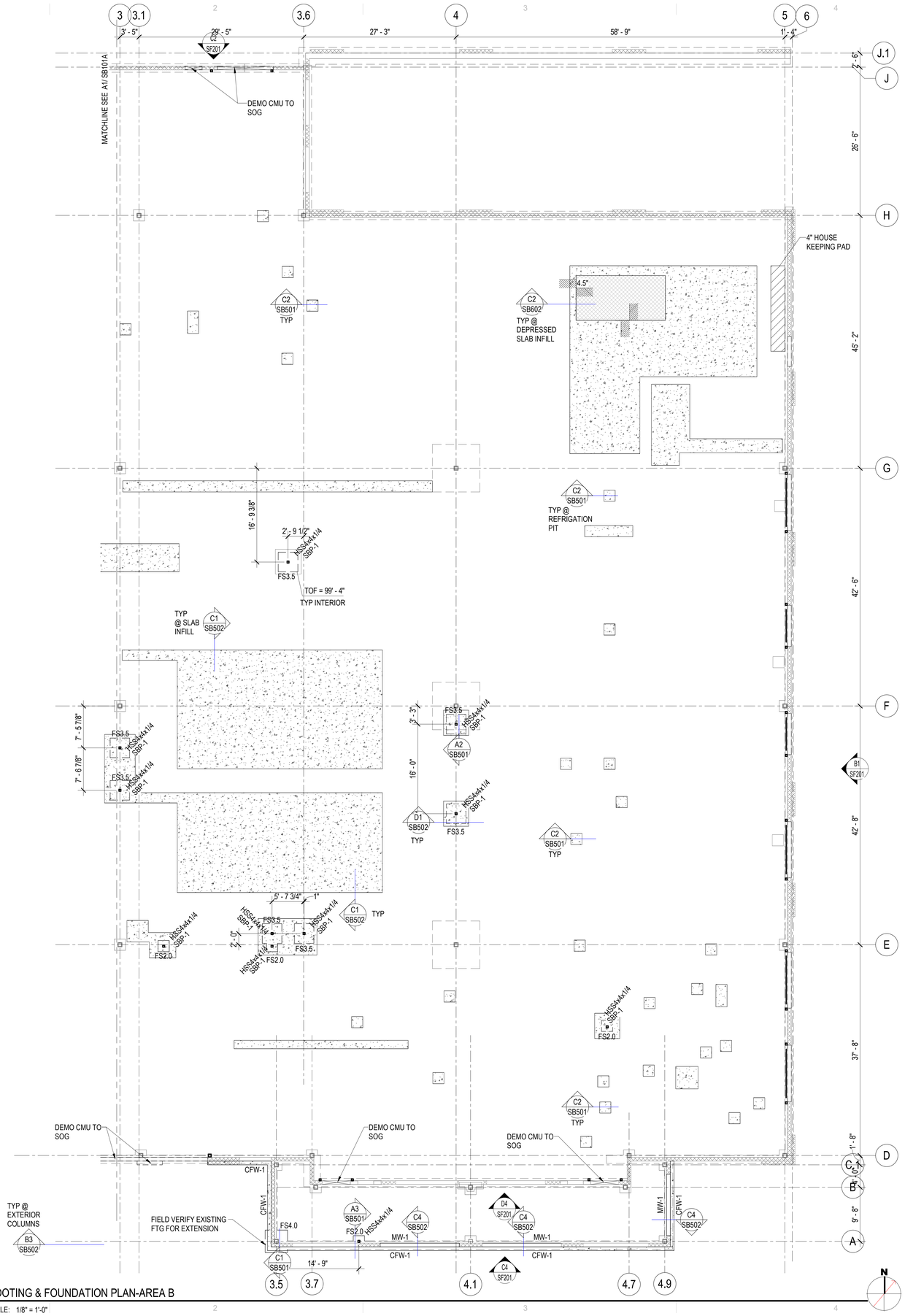

A1 / SB101B FOOTING & FOUNDATION PLAN-AREA B

SCALE: 1/8" = 1'-0"

FOOTING & FOUNDATION PLAN NOTES

1. SEE ARCHITECTURAL, CIVIL AND LANDSCAPE DRAWINGS FOR EXTERIOR CONCRETE RETAINING AND / OR SITE WALLS NOT SHOWN ON THE STRUCTURAL DRAWINGS.

2. SEE TYPICAL STEP DETAIL AT CONTINUOUS FOOTING AND TYPICAL STEP DETAIL AT MAT FOOTING FOR REINFORCING REQUIREMENTS D1/SB501.

3. PROVIDE REINFORCEMENT AT WALL ENDS, INTERSECTIONS AND OPENINGS PER TYPICAL DETAILS D2/SB601 AND C2/SB601.

4. DOWEL ALL CONCRETE WALLS TO FOOTING PER TYPICAL DETAIL C4/SB501.

5. PROVIDE COMPACTED STRUCTURAL FILL UNDER ALL CONCRETE FOOTINGS PER TYPICAL DETAIL A5/SB501.

6. WHERE REQUIRED, DEMO THE EXISTING SLAB ON GRADE AND REPLACE WITH NEW CONCRETE MATCHING THE THICKNESS OF THE EXISTING SLAB PER DETAIL C1/SB502.

7. SBP.# INDICATES THE COLUMN BASEPLATE TYPE. SEE SCHEDULE ON SF602

EXISTING BUILDING NOTES

1. THE CONTRACTOR SHALL FIELD VERIFY ALL EXISTING CONDITIONS PRIOR TO DETAILING, FABRICATING, ERECTING OR INSTALLING ANY STRUCTURAL ELEMENT. ALL DISCREPANCIES SHALL BE BROUGHT TO THE ATTENTION OF THE DESIGN TEAM IN A TIMELY MANNER SUCH THAT WORK WILL NOT BE DELAYED.

2. THE CONTRACTOR SHALL PROVIDE ADEQUATE SHORING OF EXISTING STRUCTURE DURING CONSTRUCTION.

3. INFILL ROOF DECK OPENINGS, SEE TYP DETAIL B3/SF503.

MHTN ARCHITECTS

MHTN Architects, Inc.
280 South 400 West
Suite 250
Salt Lake City, Utah 84101
Telephone (801) 595-6700
www.mhtn.com

REAVELEY Engineers

515 East 100 South, Suite 1200
Salt Lake City, Utah 84102
801 486 3883
www.reaveley.com

JORDAN SCHOOL DISTRICT

JORDAN LEARNING CENTER

3706 WEST 9800 SOUTH
SOUTH JORDAN, UT 84009

©2023 MHTN ARCHITECTS, INC.

Confidentiality Notice:
This document is intended for use on the Project identified herein by individuals and companies involved in the design, permitting, bidding and construction of the Project. MHTN Architects, Inc. grants limited rights to distribute and reproduce this document for this express purpose only. Distribution, printing or copying this document for purposes other than those indicated is strictly prohibited. If a digital copy of this document is received in error, please delete it.

SEAL

PROFESSIONAL STRUCTURAL ENGINEER
No. 10369202-2202
JUSTIN D. NADAULD
STATE OF UTAH

08/29/24

MHTN PROJECT NO. 2024528

Original drawing is 30 x 42. Do not scale contents of this drawing.

REVISIONS
CONTRACTOR TO VERIFY DRAWINGS IN FIELD USE REFLECT LAST REVISION DATE

NO.△	DATE	DESCRIPTION

ISSUE
CONSTRUCTION DOCUMENTS 100%
08/29/24

SHEET NAME
FOOTING & FOUNDATION PLAN-AREA B

SHEET NUMBER
SB101B

Autodesk Docs://2024528 JSD Retail Remodel/S24 2024528 JSD Retail Remodel.rvt
8/27/2024 7:12:53 PM

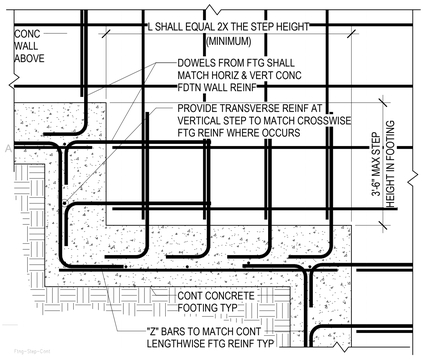

D1 / SB501 TYPICAL STEP DETAIL AT CONTINUOUS FOOTING

NO SCALE

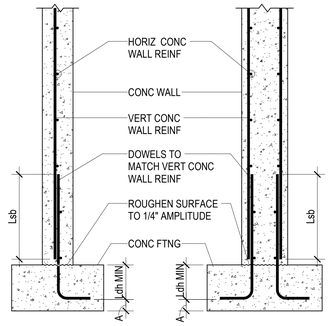

CONCRETE WALL

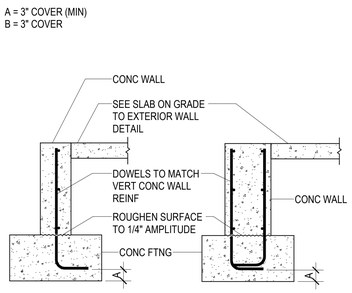

CONCRETE WALL (STEM)

D2 / SB501 TYPICAL CONCRETE WALL CONNECTION TO CONCRETE FOOTING

NO SCALE

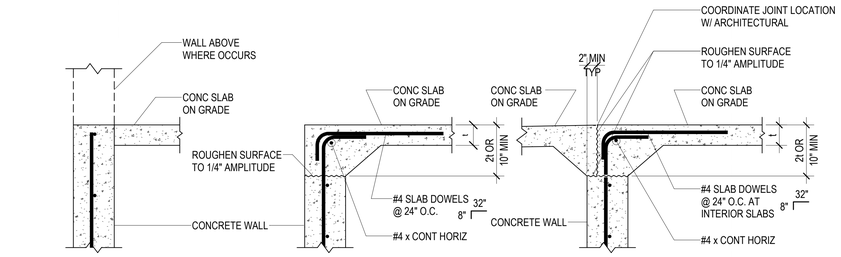

D4 / SB501 TYPICAL CONCRETE SLAB ON GRADE TO CONCRETE WALL

NO SCALE

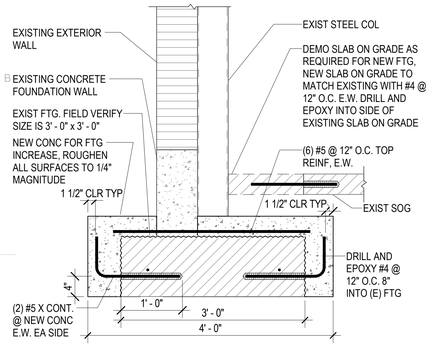

C1 / SB501 EXISTING FOOTING SIZE INCREASE

NO SCALE

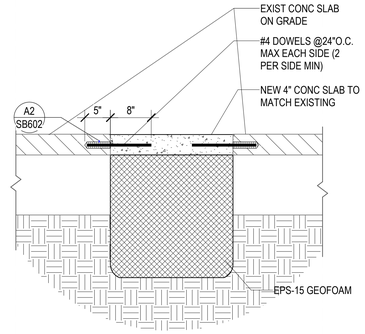

C2 / SB501 EXISTING REFRIGERATION PITS INFILL

NO SCALE

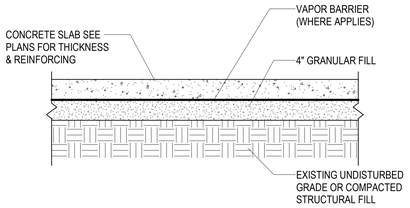

C3 / SB501 TYPICAL CONCRETE SLAB ON GRADE PROFILE

NO SCALE

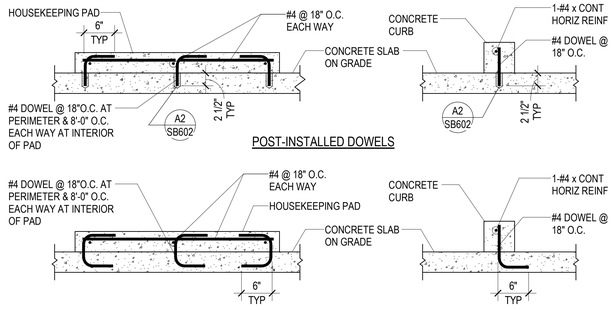

C4 / SB501 TYPICAL HOUSEKEEPING PAD & CURB DETAILS AT CONCRETE SLAB ON GRADE

NO SCALE

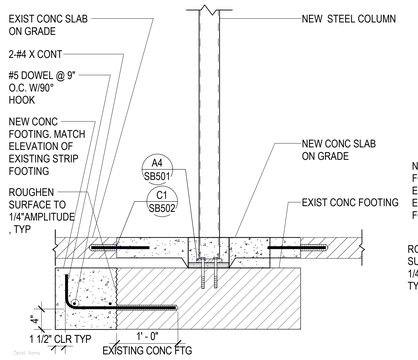

A2 / SB501 NEW STEEL COLUMNS BEARING ON EXISTING FOOTING

NO SCALE

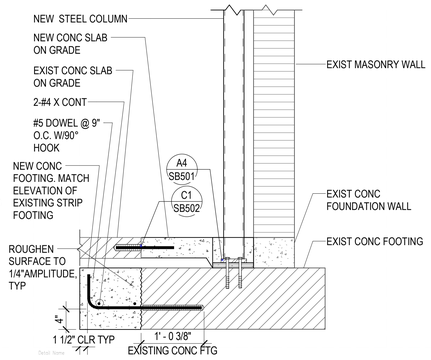

A3 / SB501 NEW STEEL COLUMNS BEARING ON EXISTING FOOTING

NO SCALE

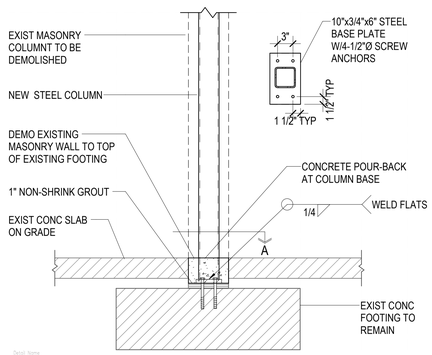

A4 / SB501 NEW STEEL COLUMNS BEARING ON EXISTING FOOTING

NO SCALE

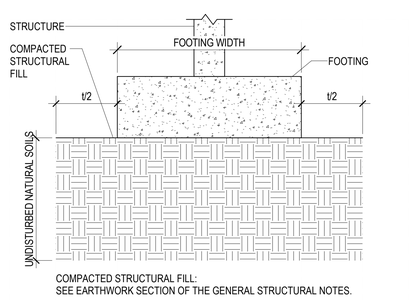

COMPACTED STRUCTURAL FILL:
SEE EARTHWORK SECTION OF THE GENERAL STRUCTURAL NOTES.

A5 / SB501 TYPICAL COMPACTED STRUCTURAL FILL DETAIL

NO SCALE

MHTN ARCHITECTS
MHTN Architects, Inc.
280 South 400 West
Suite 250
Salt Lake City, Utah 84101
Telephone (801) 595-6700
www.mhtn.com

REAVELEY Engineers
515 East 100 South, Suite 1200
Salt Lake City, Utah 84102
801 486 3883
www.reaveley.com

JORDAN SCHOOL DISTRICT

JORDAN LEARNING CENTER

3706 WEST 9800 SOUTH
SOUTH JORDAN, UT 84009

©2023 MHTN ARCHITECTS, INC.

Confidentiality Notice:
This document is intended for use on the Project identified herein by individuals and companies involved in the design, permitting, bidding and construction of the Project. MHTN Architects, Inc. grants limited rights to distribute and reproduce this document for this express purpose only. Distribution, printing or copying this document for purposes other than those indicated is strictly prohibited. If a digital copy of this document is received in error, please delete it.

SEAL

PROFESSIONAL STRUCTURAL ENGINEER
No. 10369744
JUSTIN D. NADAULD
STATE OF UTAH
08/29/24

MHTN PROJECT NO. 2024528

Original drawing is 30 x 42. Do not scale contents of this drawing.

REVISIONS
CONTRACTOR TO VERIFY DRAWINGS IN FIELD USE REFLECT LAST REVISION DATE.

NO.	DATE	DESCRIPTION

ISSUE
CONSTRUCTION DOCUMENTS 100%
08/29/24

SHEET NAME
TYPICAL FOOTING & FOUNDATION DETAILS

SHEET NUMBER
SB501

Autodesk Docs://2024528 JSD Retail Remodel/S24 2024528 JSD Retail Remodel.rvt
8/27/2024 7:12:59 PM

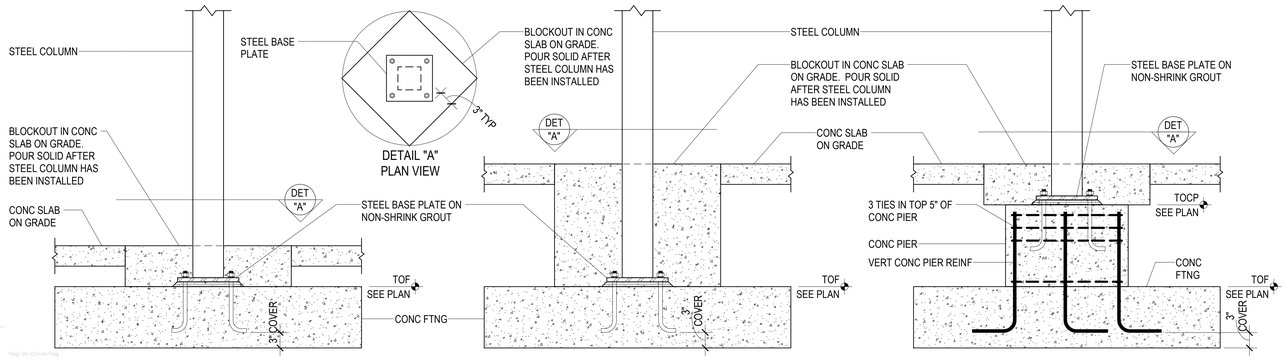

D1 / SB502 TYPICAL STEEL COLUMN CONNECTION TO CONCRETE FOOTING/CONCRETE PIER

NO SCALE

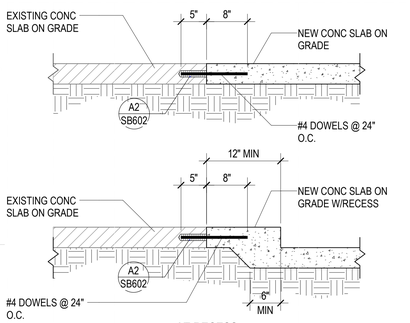

C1 / SB502 TYPICAL NEW SLAB ON GRADE CONNECTION TO EXISTING CONCRETE SLAB ON GRADE

NO SCALE

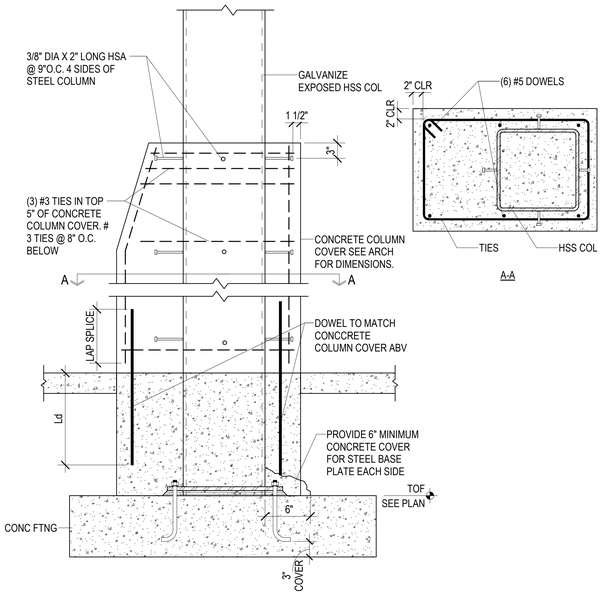

B3 / SB502 TYPICAL STEEL COLUMN CONNECTION TO CONCRETE FOOTING/CONCRETE PIER

NO SCALE

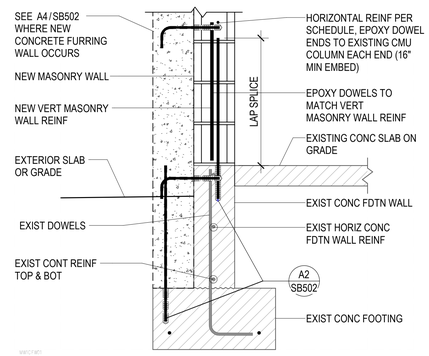

C4 / SB502 TYPICAL NEW MASONRY WALL ON EXIST FOUNDATION WALL

NO SCALE

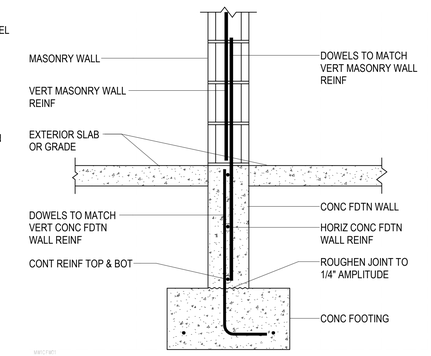

C5 / SB502 TYPICAL MASONRY WALL ON FOUNDATION WALL

NO SCALE

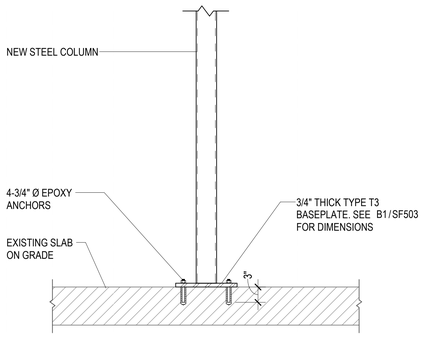

A2 / SB502 NEW TUBE COLUMN CONNECTION TO EXISTING SLAB ON GRADE

NO SCALE

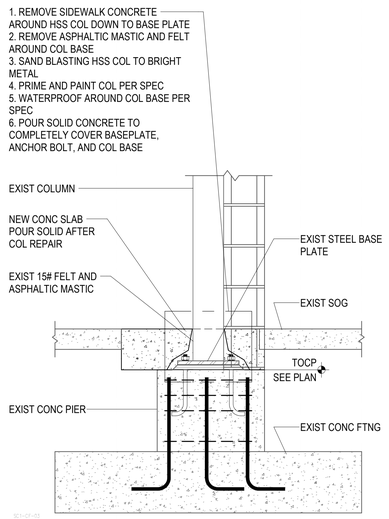

A3 / SB502 RUST REPAIR ON EXIST EXTERIOR HSS COLUMN

NO SCALE

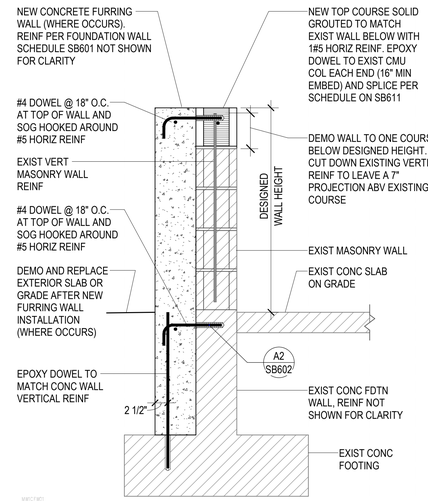

A4 / SB502 MASONRY WALL CUT DOWN ON EXIST FOUNDATION WALL

NO SCALE

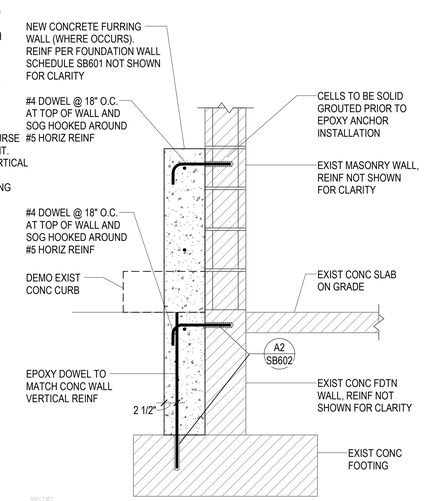

A5 / SB502 NEW FURRING CONC WALL TO EXISTING CMU WALL

NO SCALE

MHTN ARCHITECTS
MHTN Architects, Inc.
280 South 400 West
Suite 250
Salt Lake City, Utah 84101
Telephone (801) 595-6700
www.mhtn.com

REAVELEY Engineers
515 East 100 South, Suite 1200
Salt Lake City, Utah 84102
801 486 3883
www.reaveley.com

JORDAN SCHOOL DISTRICT

JORDAN LEARNING CENTER

3706 WEST 9800 SOUTH
SOUTH JORDAN, UT 84009

©2023 MHTN ARCHITECTS, INC.
Confidentiality Notice:
This document is intended for use on the Project identified herein by individuals and companies involved in the design, permitting, bidding and construction of the Project. MHTN Architects, Inc. grants limited rights to distribute and reproduce this document for this express purpose only. Distribution, printing or copying this document for purposes other than those indicated is strictly prohibited. If a digital copy of this document is received in error, please delete it.

SEAL

PROFESSIONAL STRUCTURAL ENGINEER
No. 10377207-2202
JUSTIN D. NADAULD
STATE OF UTAH
08/29/24

MHTN PROJECT NO. 2024528

Original drawing is 30 x 42. Do not scale contents of this drawing.

REVISIONS
CONTRACTOR TO VERIFY DRAWINGS IN FIELD USE REFLECT LAST REVISION DATE.

NO.	DATE	DESCRIPTION

ISSUE
CONSTRUCTION DOCUMENTS 100%
08/29/24

SHEET NAME
TYPICAL FOOTING & FOUNDATION DETAILS

SHEET NUMBER
SB502

Autodesk Docs://2024528 JSD Retail Remodel/S24 2024528 JSD Retail Remodel.rvt
8/27/2024 7:12:59 PM

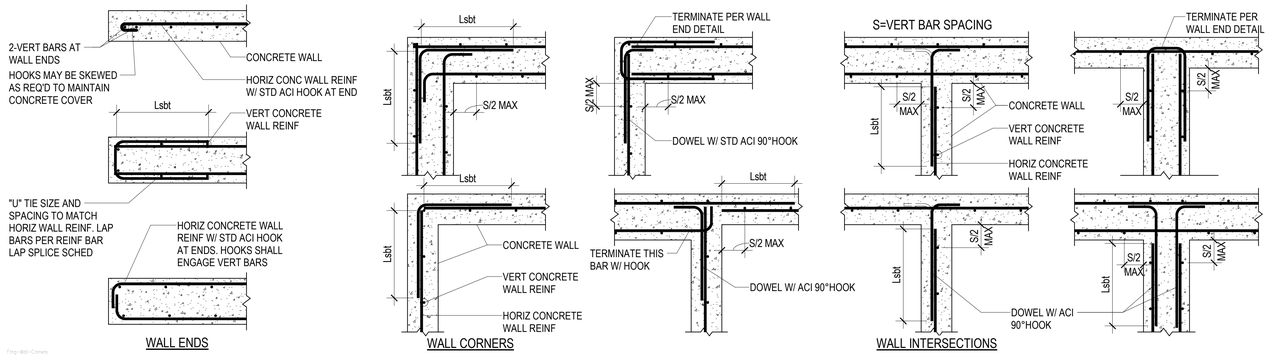

D2 SB601 TYPICAL CONCRETE WALL REINFORCING AT ENDS, CORNERS AND INTERSECTIONS (PLAN VIEWS)

NO SCALE

CONCRETE FOUNDATION WALL SCHEDULE					
MARK	THICK	HORIZONTAL REINFORCING	VERTICAL REINFORCING	T & B HORIZ. BARS	PLACEMENT
CFW-1	8"	#5 @ 15" O.C.	#4 @ 16" O.C.	1-#5	TYPE A

NOTES:
1. HORIZONTAL WALL REINFORCING SHALL BE CONTINUOUS THRU CONSTRUCTION & CONTROL JOINTS.
2. SPLICES IN HORIZONTAL WALL REINFORCING SHALL BE TYPE Lsbt, STAGGERED SUCH THAT SPLICES DO NOT OVERLAP. SPLICES IN TWO CURTAINS SHALL NOT OCCUR IN THE SAME LOCATION.

PLACEMENT TYPE

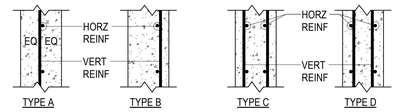

E.F. = EACH FACE
O.F. = OUTSIDE FACE (AGAINST SOIL)
I.F. = INSIDE FACE
3L = THREE LAYERS

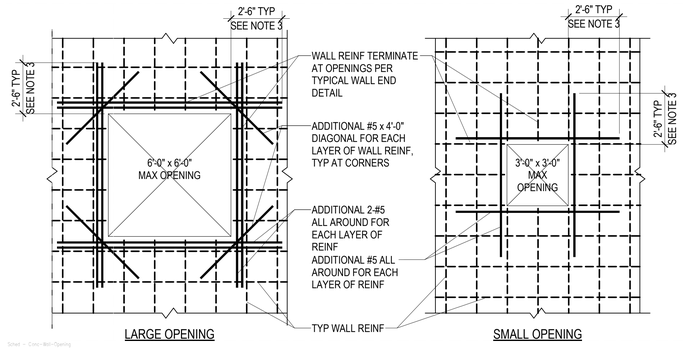

NOTES:
1. OMIT ADDED REINFORCEMENT SHOWN WHEN SPECIAL REINFORCEMENT INDICATED ON PLANS OR DETAILS, EXCEEDS THIS REINFORCEMENT.

2. CONTRACTOR SHALL VERIFY ALL OPENINGS NOT SHOWN ON THE STRUCTURAL DRAWINGS WITH THE STRUCTURAL ENGINEER BEFORE PLACEMENT.

3. WHEN EDGE OF CONCRETE CLOSE TO OPENING WILL NOT ALLOW THIS LENGTH TERMINATE AT EDGE WITH STANDARD HOOK.

4. WHERE MULTIPLE OPENINGS OCCUR WITHIN TWO TIMES THE OPENING DIMENSION, THE GROUP OF OPENINGS SHALL BE TREATED AS A SINGLE OPENING

C2 SB601 TYPICAL OPENINGS THROUGH CONCRETE WALLS

NO SCALE

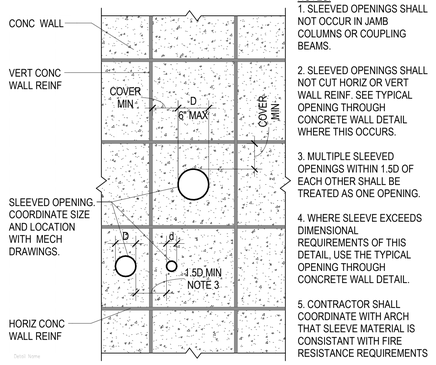

NOTES:
1. SLEEVED OPENINGS SHALL NOT OCCUR IN JAMB COLUMNS OR COUPLING BEAMS.

2. SLEEVED OPENINGS SHALL NOT CUT HORIZ OR VERT WALL REINF. SEE TYPICAL OPENING THROUGH CONCRETE WALL DETAIL WHERE THIS OCCURS.

3. MULTIPLE SLEEVED OPENINGS WITHIN 1.5D OF EACH OTHER SHALL BE TREATED AS ONE OPENING.

4. WHERE SLEEVE EXCEEDS DIMENSIONAL REQUIREMENTS OF THIS DETAIL, USE THE TYPICAL OPENING THROUGH CONCRETE WALL DETAIL.

5. CONTRACTOR SHALL COORDINATE WITH ARCH THAT SLEEVE MATERIAL IS CONSISTANT WITH FIRE RESISTANCE REQUIREMENTS

C4 SB601 TYPICAL SLEEVED OPENING THROUGH CONCRETE WALL

NO SCALE

CONCRETE FOOTING SCHEDULE												
				CROSSWISE REINFORCING				LENGTHWISE REINFORCING				
MARK	WIDTH	LENGTH	THICK	NO.	SIZE	LENGTH	SPACE	NO.	SIZE	LENGTH	SPACE	REMARKS
FS2.0	2' - 0"	2' - 0"	1' - 0"	4	#4	2' - 6"	10"	4	#4	2' - 6"	10"	
FS4.0	4' - 0"	4' - 0"	1' - 0"	6	#4	3' - 6"	8.4"	6	#4	3' - 6"	8.4"	
FS5.0	5' - 0"	5' - 0"	1' - 0"	7	#4	4' - 6"	9"	7	#4	4' - 6"	9"	
FC4.0	4' - 0"	CONT.	1' - 0"	--	#5	3' - 6"	14"	4	#5	CONT.	14"	
FS3.5	3' - 6"	3' - 6"	1' - 0"	5	#4	3' - 0"	9"	5	#4	3' - 0"	9"	

1. PLACE ALL FOOTING REINFORCING IN BOTTOM OF FOOTING WITH 3" CLEAR CONCRETE COVER UNLESS NOTED OTHERWISE.
2. TOP REINFORCING, WHERE SPECIFIED, SHALL BE PLACED IN THE TOP OF THE FOOTING WITH 2" CLEAR CONCRETE COVER.
3. SPOT FOOTINGS SHALL BE CENTERED UNDER COLUMNS AND CONTINUOUS FOOTINGS SHALL BE CENTERED UNDER WALLS, UNLESS NOTED OTHERWISE.
4. ALL FOOTINGS SHALL BE FORMED. FOOTINGS SHALL NOT BE EARTH FORMED OR OVERSIZED WITHOUT WRITTEN PERMISSION FROM THE STRUCTURAL ENGINEER.

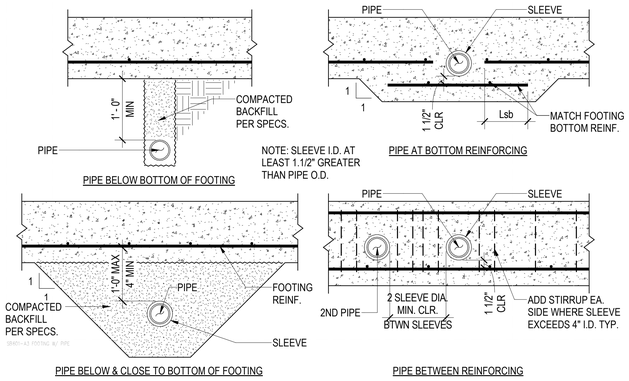

A3 SB601 PIPES PENETRATING & ADJACENT TO FOOTINGS OR GRADE BEAMS

NO SCALE

MHTN ARCHITECTS
MHTN Architects, Inc.
280 South 400 West
Suite 250
Salt Lake City, Utah 84101
Telephone (801) 595-6700
www.mhtn.com

REAVELEY Engineers
515 East 100 South, Suite 1200
Salt Lake City, Utah 84102
801 486 3883
www.reaveley.com

JORDAN SCHOOL DISTRICT

JORDAN LEARNING CENTER

3706 WEST 9800 SOUTH
SOUTH JORDAN, UT 84009

©2023 MHTN ARCHITECTS, INC.

Confidentiality Notice:
This document is intended for use on the Project identified herein by individuals and companies involved in the design, permitting, bidding and construction of the Project. MHTN Architects, Inc. grants limited rights to distribute and reproduce this document for this express purpose only. Distribution, printing or copying this document for purposes other than those indicated is strictly prohibited. If a digital copy of this document is received in error, please delete it.

SEAL

PROFESSIONAL STRUCTURAL ENGINEER
No. 10373447
JUSTIN D. NADAULD
STATE OF UTAH
08/29/24

MHTN PROJECT NO. 2024528

Original drawing is 30 x 42. Do not scale contents of this drawing.

REVISIONS
CONTRACTOR TO VERIFY DRAWINGS IN FIELD USE REFLECT LAST REVISION DATE.

NO.	DATE	DESCRIPTION

ISSUE
CONSTRUCTION DOCUMENTS 100%
08/29/24

SHEET NAME
CONCRETE SCHEDULES

SHEET NUMBER
SB601

Autodesk Docs://2024528 JSD Retail Remodel/S24 2024528 JSD Retail Remodel.rvt
8/27/2024 7:13:00 PM

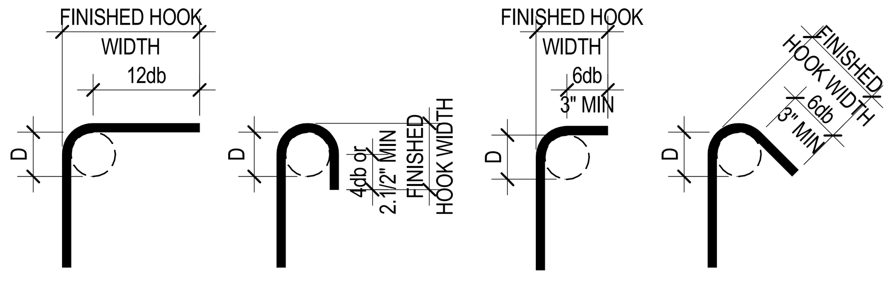

90° HOOK 180° HOOK 90° TIE HOOK 135° TIE HOOK

END HOOK SCHEDULE						
BAR SIZE	STANDARD FINISHED HOOK WIDTH			SEISMIC FINISHED HOOK WIDTH		
	D	90° HOOK	180° HOOK	D	90° TIE HOOK	135° TIE HOOK
#3	2.1/4"	6"	3"	1.1/2"	4"	4.1/4"
#4	3"	8"	4"	2"	4.1/2"	4.1/2"
#5	3.3/4"	10"	5"	2.1/2"	6"	5.1/2"
#6	4.1/2"	12"	6"	4.1/2"	--	8"
#7	5.1/4"	14"	7"	5.1/4"	--	9"
#8	6"	16"	8"	6"	--	10.1/2"
#9	9.1/2"	19"	11.3/4"	--	--	--
#10	10.3/4"	22"	13.1/4"	--	--	--
#11	12"	24"	14.3/4"	--	--	--
#14	18.1/4"	31"	21.3/4"	--	--	--
#18	24"	41"	28.1/2"	--	--	--

Sched - End-Hook

D1 / SB602 REINFORCEMENT END HOOK SCHEDULE
NO SCALE

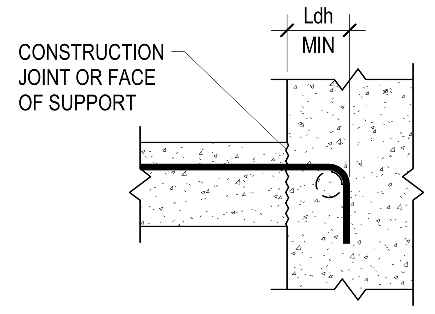

TENSION HOOK DEVELOPMENT LENGTH (Ldh)					
BAR SIZE	NORMAL WEIGHT CONCRETE, f'c = PSI				
	3,000	4,000	4,500	5,000	6,000
#3	6"	6"	6"	6"	6"
#4	6"	6"	6"	6"	6"
#5	8"	8"	8"	8"	7"
#6	11"	10"	10"	10"	10"
#7	14"	13"	12"	12"	12"
#8	16"	15"	15"	15"	15"
#9	20"	18"	18"	18"	17"
#10	23"	22"	21"	21"	21"
#11	27"	26"	25"	25"	24"
#14	71"	66"	65"	64"	63"
#18	109"	102"	100"	98"	96"

NOTES:
1.SCHEDULE DOES NOT APPLY FOR THE FOLLOWING HOOKED BAR CASES:
a. BAR SPACING(s) LESS THAN 6db.
b. BARS TERMINATING IN A COLUMN CORE WITH SIDE COVER PERPENDICULAR TO PLANE OF HOOK LESS THAN 2.5 IN.
c. BARS WITH SIDE COVER PERPENDICULAR TO PLANE OF HOOK LESS THAN 6db.
d. BARS AT DISCONTINUOUS ENDS OF MEMBERS WITH SIDE, TOP, AND BOTTOM COVER TO HOOK LESS THAN 2.5 IN.

2. VALUES IN SCHEDULE ARE APPLICABLE TO GRADE 60 REINFORCING BARS
a. FOR GRADE 80 BARS, MULTIPLY VALUES BY 1.33.
b. FOR GRADE 100 BARS, MULTIPLY VALUES BY 1.67.

3. ADJUST VALUES AS NOTED FOR THE FOLLOWING CASES
a. FOR BARS COATED IN EPOXY AND/OR ZINC MULTIPLY VALUES BY 1.2.
b. FOR LIGHTWEIGHT CONCRETE MULTIPLY VALUES BY 1.33.

4. CASES NOT APPLICABLE TO THIS SCHEDULE SHALL BE IN ACCORDANCE WITH SECTION 25.4.3 OF ACI 318-19

Sched - Tension-Hook

C2 / SB602 TENSION HOOK DEVELOPMENT SCHEDULE
NO SCALE

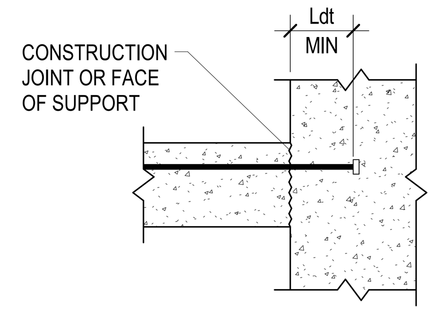

TENSION HEADED BAR DEVELOPMENT LENGTH (Ldt)					
BAR SIZE	NORMAL WEIGHT CONCRETE, f'c = PSI				
	3,000	4,000	4,500	5,000	6,000
#3	6"	6"	6"	6"	6"
#4	6"	6"	6"	6"	6"
#5	6"	6"	6"	6"	6"
#6	8"	8"	7"	7"	7"
#7	10"	9"	9"	9"	9"
#8	12"	11"	11"	11"	11"
#9	14"	14"	13"	13"	13"
#10	17"	16"	16"	16"	15"
#11	20"	19"	18"	18"	18"

NOTES:
1. SCHEDULE DOES NOT APPLY FOR THE FOLLOWING HEADED BAR CASES:
a. BAR SPACING(s) LESS THAN 6db.
b. BARS TERMINATING IN A COLUMN CORE WITH SIDE COVER PERPENDICULAR TO PLANE OF HEADED BAR LESS THAN 2.5 IN.
c. BARS WITH SIDE COVER PERPENDICULAR TO PLANE OF HEADED BAR LESS THAN 6db.

2. VALUES IN SCHEDULE ARE APPLICABLE TO GRADE 60 REINFORCING BARS.
a. FOR GRADE 80 BARS, MULTIPLY VALUES BY 1.33.
b. FOR GRADE 100 BARS, MULTIPLY BY VALUES 1.67

3. FOR EPOXY AND/OR ZINC COATED BARS MULTIPLY VALUES BY 1.2

4. CASES NOT APPLICABLE TO THIS SCHEDULE SHALL BE IN ACCORDANCE WITH SECTION 25.4.4. OF ACI 318-19

5. TENSION HEADED REINFORCING BARS SHALL CONFORM TO SECTION 25.4.4.1 OF ACI 319-19.

Sched - Tension-Headed

C3 / SB602 TENSION HEADED BAR DEVELOPMENT SCHEDULE
NO SCALE

CONCRETE REINFORCING BAR DEVELOPMENT AND LAP SPLICE LENGTH SCHEDULE																						
BAR SIZE	f'c = 3000 PSI				f'c = 4000 PSI				f'c = 4500 PSI				f'c = 5000 PSI				f'c = 6000 PSI				f'c = ALL	
	Ld	Lt	Lsb	Lsbt	Ld	Lt	Lsb	Lsbt	Ld	Lt	Lsb	Lsbt	Ld	Lt	Lsb	Lsbt	Ld	Lt	Lsb	Lsbt	Ldc	Lsc
#3	17"	22"	22"	28"	15"	19"	19"	25"	14"	18"	18"	23"	13"	17"	17"	22"	12"	16"	16"	20"	8"	12"
#4	22"	29"	29"	38"	19"	25"	25"	33"	18"	24"	24"	31"	17"	23"	23"	29"	16"	21"	21"	27"	10"	15"
#5	28"	36"	36"	47"	24"	31"	31"	41"	23"	30"	30"	38"	22"	28"	28"	36"	20"	26"	26"	33"	12"	19"
#6	33"	43"	43"	56"	29"	37"	37"	49"	27"	35"	35"	46"	26"	34"	34"	44"	24"	31"	31"	40"	15"	23"
#7	48"	63"	63"	81"	42"	54"	54"	71"	40"	51"	51"	67"	38"	49"	49"	63"	34"	45"	45"	58"	17"	27"
#8	55"	72"	72"	93"	48"	62"	62"	81"	45"	59"	59"	76"	43"	56"	56"	72"	39"	51"	51"	66"	19"	30"
#9	62"	81"	81"	105"	54"	70"	70"	91"	51"	66"	66"	86"	48"	63"	63"	81"	44"	57"	57"	74"	22"	34"
#10	70"	91"	91"	118"	61"	79"	79"	102"	57"	74"	74"	96"	54"	71"	71"	92"	50"	64"	64"	84"	24"	39"
#11	78"	101"	101"	131"	67"	87"	87"	114"	64"	82"	82"	107"	60"	78"	78"	102"	55"	71"	71"	93"	27"	43"
#14	93"	121"	NA	NA	81"	105"	NA	NA	76"	99"	NA	NA	72"	94"	NA	NA	66"	86"	NA	NA	33"	NA
#18	124"	161"	NA	NA	108"	140"	NA	NA	101"	132"	NA	NA	96"	125"	NA	NA	88"	114"	NA	NA	43"	NA

Sched - Reinf-Splice

NOTES:
1. DEFINITIONS:
Ld: TENSION DEVELOPMENT LENGTH FOR REINFORCEMENT SATISFYING THE FOLLOWING CONDITIONS:
SLABS AND WALLS: CLEAR SPACING > 2db AND CONCRETE CLEAR COVER > db
BEAMS AND COLUMNS: CLEAR COVER SPACING > db AND CONCRETE CLEAR COVER > db
Lt: DEVELOPMENT LENGTH FOR TOP BARS IN TENSION
Lsb: TENSION LAP SPLICE LENGTH FOR OTHER THAN TOP BARS (CLASS B)
Lsbt: TENSION LAP SPLICE LENGTH OF TOP BARS.
Ldc: DEVELOPMENT LENGTH FOR BARS IN COMPRESSION
Lsc: TIED COLUMN LAP SPLICE IN COMPRESSION
db: NOMINAL BAR DIAMETER (INCHES)
TOP BARS: HORIZONTAL BEAM REINFORCEMENT WITH MORE THAN 12 INCHES OF CONCRETE CAST BELOW

2. MULTIPLY VALUES IN SCHEDULE BY 1.5 IF CLEAR SPACING OR CONCRETE COVER DO NOT MEET REQUIREMENTS FOR Ld IN NOTE 1.

3. MULTIPLY VALUES IN SCHEDULE BY 1.3 FOR USE IN LIGHTWEIGHT AGGREGATE CONCRETE.

4. FOR EPOXY COATED BAR: MULTIPLY VALUES IN SCHEDULE BY 1.5 FOR BARS WITH CLEAR COVER < 3db OR CLEAR SPACING < 6db. OTHERWISE MULTIPLY VALUES BY 1.2.

5. a. FOR BUNDLED BARS OF THREE OR LESS MULTIPLY LENGTHS BY 1.2.
b. FOR BUNDLED BARS OF FOUR OR MORE MULTIPLY LENGTHS BY 1.33.
c. INDIVIDUAL BAR SPLICES WITHIN A BUNDLE SHALL NOT OVERLAP. ENTIRE BUNDLES SHALL NOT BE LAP SPLICED.

6. SCHEDULE LENGTHS ARE FOR fy=60ksi REINFORCING, MULTIPLY LENGTHS BY 1.53 FOR fy=80ksi, 2.17 FOR fy=100ksi REINFORCING.

7. LAP SPLICES ARE NOT PERMITTED FOR #14 & #18 BARS. USE BAR COUPLERS PER G.S.N.

8. MINIMUM CLEAR SPACING BETWEEN THE CONTACT LAP SPLICES SHOWN IN THIS SCHEDULE AND ADJACENT SPLICES OR BARS SHALL BE IN ACCORDANCE WITH THE DETAILING PROVISIONS OF GENERAL STRUCTURAL NOTES.

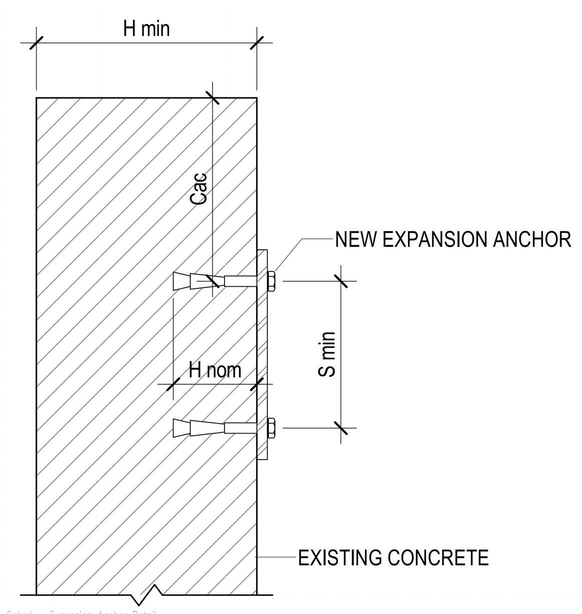

EXPANSION ANCHORS IN CONCRETE SCHEDULE				
ANCHOR SIZE	MINIMUM EDGE DISTANCE (Cac)	EMBEDMENT LENGTH (H nom)	MINIMUM CONCRETE THICKNESS (H min)	MINIMUM ANCHOR SPACING (S min)
3/8"Ø	6.1/2"	2.7/8"	4.1/2"	3.3/4"
1/2"Ø	10"	3.7/8"	6"	5"
5/8"Ø	10"	5.1/8"	8"	6"
3/4"Ø	16"	5.3/4"	10"	7"

NOTES:
1. THIS SCHEDULE SHALL BE USED ONLY WHERE SPECIFICALLY REFERENCED ON THE DRAWINGS. ANCHORS AT OTHER LOCATIONS MUST BE APPROVED BY THE ENGINEER PRIOR TO INSTALLATION.
2. EDGE DISTANCE, Cac, AND EMBEDMENT LENGTHS, H nom, AND ANCHOR SPACING SPECIFIED ON PLANS OR DETAILS TAKE PRECEDENCE OVER VALUES IN THIS SCHEDULE.
3. ANCHORS LOCATED WHERE THE THICKNESS OF THE EXISTING CONCRETE MEMBER DOES NOT MEET THE REQUIRED MINIMUM CONCRETE THICKNESS MUST BE APPROVED BY THE STRUCTURAL ENGINEER PRIOR TO INSTALLATION.
4. SEE GENERAL STRUCTURAL NOTES FOR LIST OF APPROVED ANCHORS AND OTHER REQUIREMENTS FOR USING EXPANSION ANCHORS.

Sched - Expansion Anchor Detail

B4 / SB602 EXPANSION ANCHORS IN CONCRETE SCHEDULE
NO SCALE

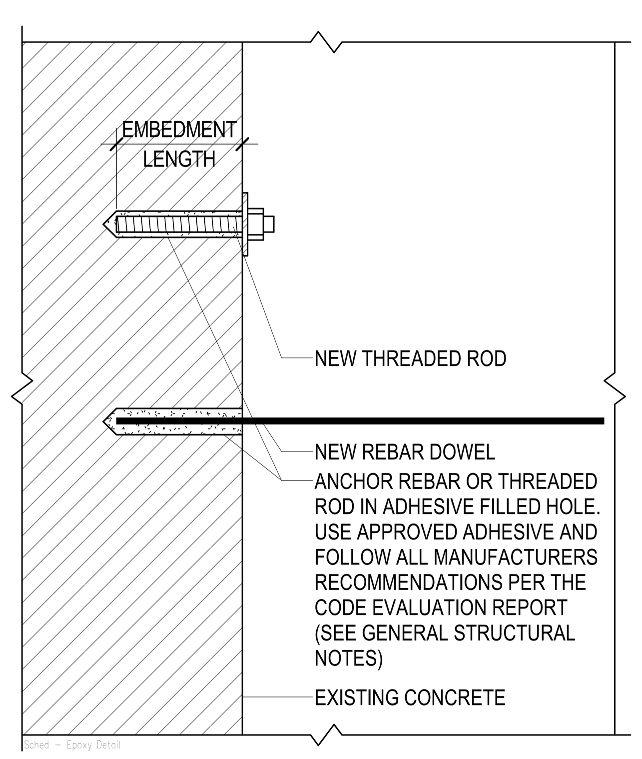

Sched - Epoxy Detail

ADHESIVE ANCHORS IN CONCRETE SCHEDULE			
REINFORCING BAR		THREADED ROD	
DOWEL SIZE	EMBEDMENT LENGTH (SEE NOTE #2)	SIZE	EMBEDMENT LENGTH (SEE NOTE #2)
#3	4"	3/8"Ø	4.1/2"
#4	6"	1/2"Ø	6"
#5	9"	5/8"Ø	7.1/2"
#6	10"	3/4"Ø	9"
#7	12.1/2"	7/8"Ø	10.1/2"
#8	13"	1"Ø	12"
#9	14"	1.1/4"Ø	15"
#10	18"		
#11	19"		

NOTES:
1. THIS SCHEDULE SHALL BE USED ONLY WHERE SPECIFICALLY REFERENCED ON THE DRAWINGS AND AT OTHER LOCATIONS WITH APPROVAL OF THE STRUCTURAL ENGINEER.
2. EMBEDMENT LENGTHS SPECIFIED ON PLANS OR DETAILS TAKE PRECEDENCE OVER EMBEDMENT LENGTHS IN THIS SCHEDULE.
3. WHERE THE THICKNESS OF THE EXISTING CONCRETE MEMBER IS NOT SUFFICIENT TO ACHIEVE SCHEDULED EMBEDMENT AND SPECIFIED CLEAR COVER FOR THE ANCHOR, CONTACT THE STRUCTURAL ENGINEER.
4. SEE GENERAL STRUCTURAL NOTES FOR LIST OF APPROVED ADHESIVES AND OTHER REQUIREMENTS FOR ADHESIVE ANCHORING.

A2 / SB602 ADHESIVE ANCHORS IN CONCRETE SCHEDULE
NO SCALE

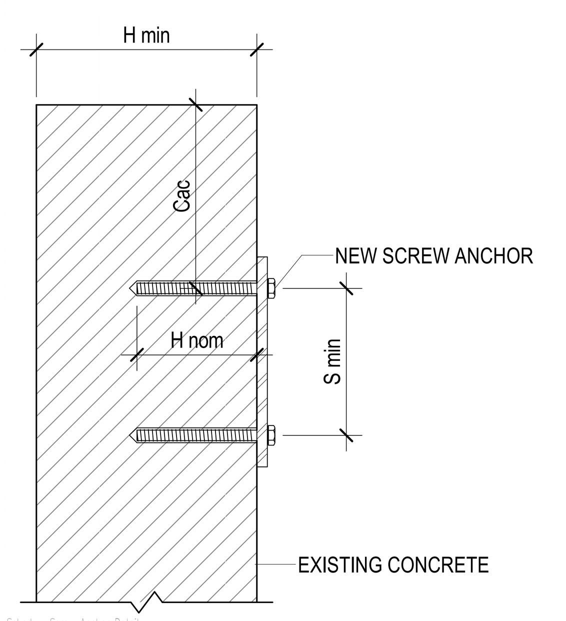

SCREW ANCHORS IN CONCRETE SCHEDULE				
ANCHOR SIZE	MINIMUM EDGE DISTANCE (Cac)	EMBEDMENT LENGTH (H nom)	MINIMUM CONCRETE THICKNESS (H min)	MINIMUM ANCHOR SPACING (S min)
3/8"Ø	3.3/4"	3.1/4"	5"	3"
1/2"Ø	4.1/2"	4"	6.1/4"	3.1/2"
5/8"Ø	6.3/8"	5.1/2"	8.1/2"	3.3/4"
3/4"Ø	7.5/16"	6.1/4"	10"	4.1/2"

NOTES:
1. THIS SCHEDULE SHALL BE USED ONLY WHERE SPECIFICALLY REFERENCED ON THE DRAWINGS AND AT OTHER LOCATIONS WITH APPROVAL OF THE STRUCTURAL ENGINEER.
2. EDGE DISTANCE, Cac, AND EMBEDMENT LENGTHS, H nom, AND ANCHOR SPACING SPECIFIED ON PLANS OR DETAILS TAKE PRECEDENCE OVER VALUES IN THIS SCHEDULE.
3. ANCHORS LOCATED WHERE THE THICKNESS OF THE EXISTING CONCRETE MEMBER DOES NOT MEET THE REQUIRED MINIMUM CONCRETE THICKNESS MUST BE APPROVED BY THE STRUCTURAL ENGINEER PRIOR TO INSTALLATION..
4. SPECIAL INSPECTION IS REQUIRED DURING INSTALLATION OF ALL SCREW ANCHORS PER THE CODE EVALUATION REPORT FOR THE ANCHOR AND THE QUALITY ASSURANCE SECTION OF THE GENERAL STRUCTURAL NOTES.
5. SEE GENERAL STRUCTURAL NOTES FOR LIST OF APPROVED ANCHORS AND OTHER REQUIREMENTS FOR USING SCREW ANCHORS.
6. SCREW ANCHORS SHALL ONLY BE USED IN INTERIOR DRY LOCATIONS

Sched - Screw Anchor Detail

A4 / SB602 SCREW ANCHORS IN CONCRETE SCHEDULE
NO SCALE

MHTN ARCHITECTS
MHTN Architects, Inc.
280 South 400 West
Suite 250
Salt Lake City, Utah 84101
Telephone (801) 595-6700
www.mhtn.com

REAVELEY Engineers
515 East 100 South, Suite 1200
Salt Lake City, Utah 84102
801 486 3883
www.reaveley.com

JORDAN SCHOOL DISTRICT
JORDAN LEARNING CENTER
3706 WEST 9800 SOUTH
SOUTH JORDAN, UT 84009

©2023 MHTN ARCHITECTS, INC.
Confidentiality Notice:
This document is intended for use on the Project identified herein by individuals and companies involved in the design, permitting, bidding and construction of the Project. MHTN Architects, Inc. grants limited rights to distribute and reproduce this document for this express purpose only. Distribution, printing or copying this document for purposes other than those indicated is strictly prohibited. If a digital copy of this document is received in error, please delete it.

SEAL
PROFESSIONAL STRUCTURAL ENGINEER No. 4859789-2203 JUSTIN D. NADAULD STATE OF UTAH
08/29/24

MHTN PROJECT NO. 2024528
Original drawing is 30 x 42. Do not scale contents of this drawing.
REVISIONS
CONTRACTOR TO VERIFY DRAWINGS IN FIELD USE REFLECT LAST REVISION DATE.

NO.	DATE	DESCRIPTION

ISSUE
CONSTRUCTION DOCUMENTS 100%
08/29/24

SHEET NAME
REINFORCING SCHEDULES

SHEET NUMBER
SB602

Autodesk Docs://2024528 JSD Retail Remodel/S24 2024528 JSD Retail Remodel.rvt
8/27/2024 7:13:01 PM

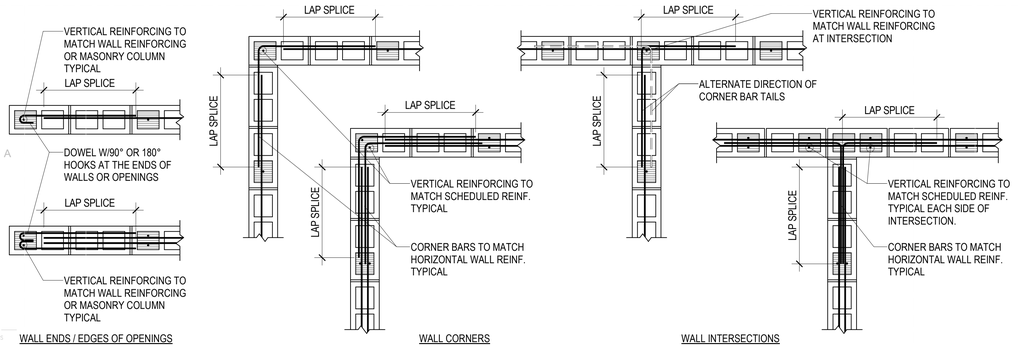

D1 / SB611 — TYPICAL MASONRY WALL END, CORNER AND INTERSECTION DETAILS

NO SCALE

MASONRY WALL SCHEDULE						
			REINFORCING			
MARK	THICK	MATERIAL	VERTICAL	HORIZONTAL	TYPE	REMARKS
MW-1	8"	CMU	#5 @ 32" O.C.	#5 @ 32" O.C.	TYPE 1	
MW-2	8"	CMU	#5 @ 16" O.C.	#5 @ 16" O.C.	TYPE 1	

NOTES

1. SEE PLANS, DETAILS AND GENERAL STRUCTURAL NOTES FOR ADDITIONAL REINFORCING REQUIREMENTS.
2. GROUT SOLID ALL CELLS BELOW GRADE, CELLS CONTAINING EMBEDS (HSA'S, DBA'S, ANCHOR BOLTS, ETC.), AND CELLS CONTAINING REINFORCING. CONSOLIDATE GROUT AS PER THE GENERAL STRUCTURAL NOTES.
3. HORIZONTAL WALL REINFORCING SHALL CONTINUE THROUGH MASONRY LINTELS. WHERE BOTH HORIZONTAL WALL REINFORCING AND LINTEL REINFORCING OCCUR IN THE SAME COURSE, THE LARGER BARS ARE TO REPLACE THE SMALLER BARS.

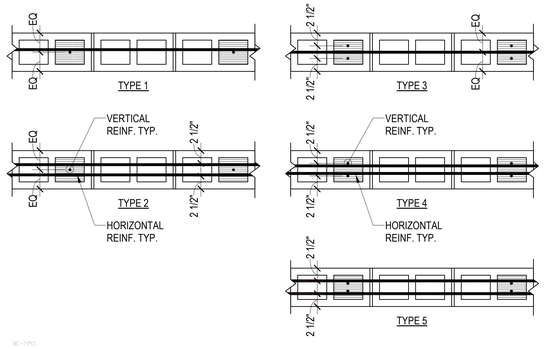

C3 / SB611 — TYPICAL MASONRY WALL TYPES - PLAN VIEW

NO SCALE

MASONRY REINFORCING BAR LAP SPLICE SCHEDULE										
BAR SIZE	f'm = 2000 psi							f'm = 2500 psi		
	6" CMU	8" CMU		10" CMU		12" CMU		6" BRICK	8" BRICK	
	CLASS	CLASS		CLASS		CLASS		CLASS	CLASS	
	A	A	B	A	B	A	B	A	A	B
#3	12"	12"	12"	12"	12"	12"	12"	12"	12"	12"
#4	18"	13"	21"	12"	20"	12"	20"	16"	12"	20"
#5	28"	20"	35"	16"	32"	13"	32"	25"	18"	33"
#6	**	38"	54"	29"	54"	24"	54"	**	34"	54"
#7	-	52"	**	40"	**	33"	63"	-	47"	-
#8	-	**	-	61"	**	50"	**	-	**	-
#9	-	-	-	79"	-	64"	-	-	-	-

NOTES:

1. CLASS A SPLICES MAY BE USED WHEN ONLY ONE BAR IS CONTINUOUS IN THE MASONRY CELL OR COURSE.
2. CLASS B SPLICES SHALL BE USED WHEN TWO BARS ARE CONTINUOUS IN THE MASONRY CELL OR COURSE.
3. ** INDICATES THAT A LAP SPLICE IS NOT ALLOWED AND MECHANICAL BAR COUPLERS ARE REQUIRED FOR THE BAR SPLICES. SPLICES SHALL BE OFFSET 2'-0" TO AVOID CONGESTION.
4. WHERE VERTICAL BARS HAVE A REQUIRED LAP SPLICE GREATER THAN THE HEIGHT OF THE GROUT POUR, THE BAR SPLICE SHALL BE MADE WITH A MECHANICAL BAR COUPLER. WHERE THE HEIGHT OF THE GROUT POUR EXCEEDS 60 INCHES, HIGH LIFT GROUTING PROCEDURES SHALL BE FOLLOWED.
5. WHERE MECHANICAL BAR COUPLERS ARE USED, THE CONNECTOR SHALL DEVELOP 125% OF THE SPECIFIED YIELD STRENGTH OF THE BAR IN TENSION AND COMPRESSION.

MASONRY COLUMN SCHEDULE						
	DIMENSIONS		REINFORCING			
MARK	WIDTH	DEPTH	VERTICAL	TIES	TYPE	REMARKS
MC-1	8"	1' - 4"	4-#5		TYPE 2	

NOTES

1. HORIZONTAL WALL REINFORCING BARS SHALL BE CONTINUOUS THROUGH MASONRY COLUMNS. AT WALL ENDS OR OPENINGS TERMINATE HORIZONTAL WALL REINFORCING WITH A 90° OR 180° HOOK.
2. FOR TYPE 2 & 2A COLUMNS, HORIZONTAL WALL REINFORCING SHALL BE LOCATED TO THE INSIDE OF VERTICAL COLUMN BARS..
3. UNLESS NOTED OTHERWISE, VERTICAL COLUMN REINFORCING AND TIES SHALL EXTEND THE FULL STORY HEIGHT OF THE WALL.
4. MASONRY COLUMN VERTICAL BARS OR DOWELS IN CONCRETE FOUNDATION WALLS SHALL HAVE TIES TO MATCH MASONRY COLUMN TIES.
5. VERTICAL REINFORCING IN TYPE 1 & 2 COLUMNS SHALL BE DISTRIBUTED EQUALLY IN EACH CELL.
6. PLACE VERTICAL COLUMN BARS IN EACH END CELL FOR TYPE 1A & 2A COLUMNS. REMAINING REINFORCING SHALL BE SPACED EQUALLY THROUGHOUT THE COLUMN WITH ONE BAR PER CELL FOR TYPE 1A AND TWO BARS PER CELL FOR TYPE 2A.
7. ALL CELLS IN COLUMNS SHALL BE GROUTED SOLID.

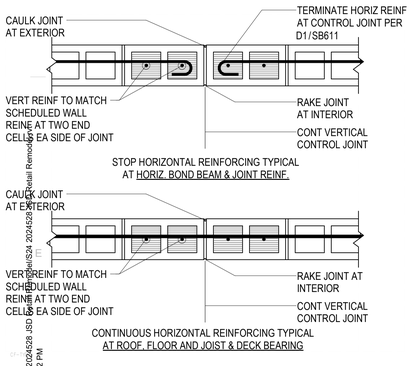

A1 / SB611 — TYPICAL CONTROL JOINTS IN MASONRY WALLS

NO SCALE

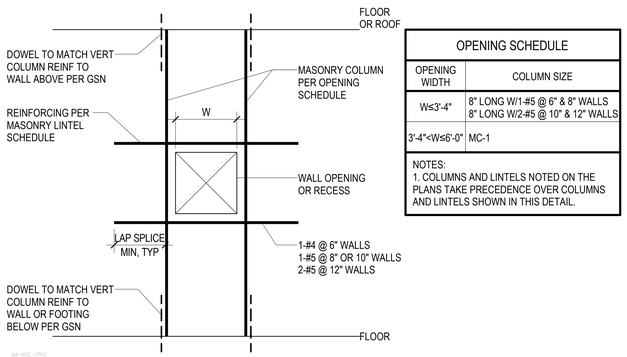

OPENING SCHEDULE	
OPENING WIDTH	COLUMN SIZE
W≤3'-4"	8" LONG W/1-#5 @ 6" & 8" WALLS 8" LONG W/2-#5 @ 10" & 12" WALLS
3'-4"<W≤6'-0"	MC-1

NOTES:
1. COLUMNS AND LINTELS NOTED ON THE PLANS TAKE PRECEDENCE OVER COLUMNS AND LINTELS SHOWN IN THIS DETAIL.

A2 / SB611 — TYPICAL REINFORCING AROUND MISCELLANEOUS OR RECESSED MASONRY OPENINGS

NO SCALE

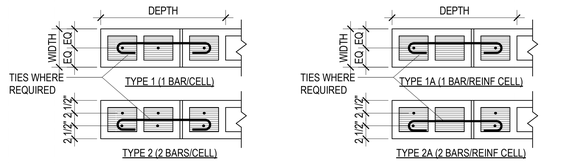

A3 / SB611 — TYPICAL MASONRY COLUMN TYPES - PLAN VIEW

NO SCALE

MHTN ARCHITECTS
MHTN Architects, Inc.
280 South 400 West
Suite 250
Salt Lake City, Utah 84101
Telephone (801) 595-6700
www.mhtn.com

REAVELEY Engineers
515 East 100 South, Suite 1200
Salt Lake City, Utah 84102
801 486 3883
www.reaveley.com

JORDAN SCHOOL DISTRICT

JORDAN LEARNING CENTER
3706 WEST 9800 SOUTH
SOUTH JORDAN, UT 84009

©2023 MHTN ARCHITECTS, INC.
Confidentiality Notice
This document is intended for use on the Project identified herein by individuals and companies involved in the design, permitting, bidding and construction of the Project. MHTN Architects, Inc. grants limited rights to distribute and reproduce this document for purposes related to the Project. Any publishing or reproduction of this document for purposes other than those indicated is strictly prohibited. If a digital copy of this document is received in error, please delete it.

SEAL

08/29/24

MHTN PROJECT NO. 2024528

Original drawing is 30 x 42. Do not scale contents of this drawing.

REVISIONS
CONTRACTOR TO VERIFY DRAWINGS IN FIELD USE REFLECT LAST REVISION DATE.

NO.△	DATE	DESCRIPTION

ISSUE
CONSTRUCTION DOCUMENTS 100%
08/29/24

SHEET NAME
MASONRY SCHEDULES

SHEET NUMBER
SB611

Autodesk Docs://2024528 JSD Retail Remodel/S24 2024528.rvt
8/27/2024 2:13:02 PM

SNOW DRIFT SCHEDULE		
MARK	DRIFT LENGTH	WD (PSF)
SND-1	7' - 0"	41
SND-2	13' - 3"	77
SND-3	11' - 9"	68
SND-4	6' - 7"	31

NOTES:
1. FOR OWSJ DESIGN DRIFT LOADS SHALL BE IN ADDITION TO ALL LOADS INDICATED ON PLANS.
2. SNOW DRIFT VALUES IN SCHEDULE ARE IN UNITS OF PSF. MULTIPLY LOADS BY JOIST SPACING TO OBTAIN PLF LOADING FOR JOIST DESIGN.

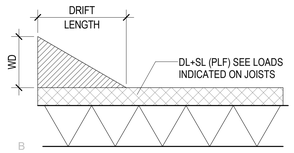

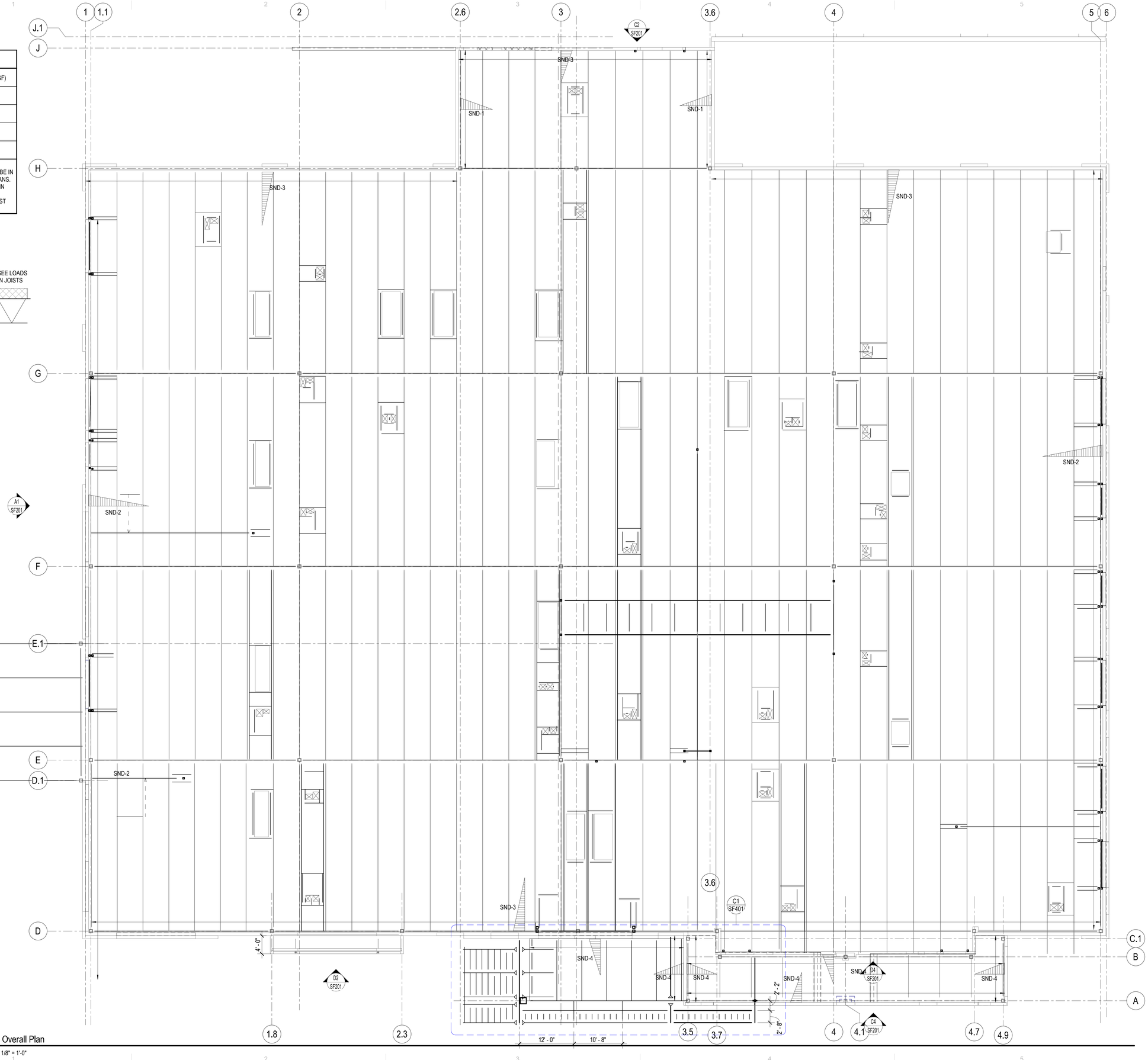

1 SF101 Roof - Overall Plan
SCALE: 1/8" = 1'-0"

MHTN ARCHITECTS
MHTN Architects, Inc.
280 South 400 West
Suite 250
Salt Lake City, Utah 84101
Telephone (801) 595-6700
www.mhtn.com

REAVELEY Engineers
515 East 100 South, Suite 1200
Salt Lake City, Utah 84102
801 486 3883
www.reaveley.com

JORDAN SCHOOL DISTRICT

JORDAN LEARNING CENTER

3706 WEST 9800 SOUTH
SOUTH JORDAN, UT 84009

©2023 MHTN ARCHITECTS, INC.

Confidentiality Notice:
This document is intended for use on the Project identified herein by individuals and companies involved in the design, permitting, bidding and construction of the Project. MHTN Architects, Inc. grants limited rights to distribute and reproduce this document for this express purpose only. Distribution, printing or copying this document for purposes other than those indicated is strictly prohibited. If a digital copy of this document is received in error, please delete it.

SEAL

PROFESSIONAL STRUCTURAL ENGINEER
No. 10375207
JUSTIN D. NADAULD
STATE OF UTAH
08/29/24

MHTN PROJECT NO. 2024528

Original drawing is 30 x 42. Do not scale contents of this drawing.

REVISIONS
CONTRACTOR TO VERIFY DRAWINGS IN FIELD USE REFLECT LAST REVISION DATE.

NO.	DATE	DESCRIPTION

ISSUE
CONSTRUCTION DOCUMENTS 100%
08/29/24

SHEET NAME
OVERALL ROOF PLAN

SHEET NUMBER
SF101

Autodesk Docs://2024528 JSD Retail Remodel/S24 2024528 JSD Retail Remodel.rvt
8/27/2024 7:13:05 PM

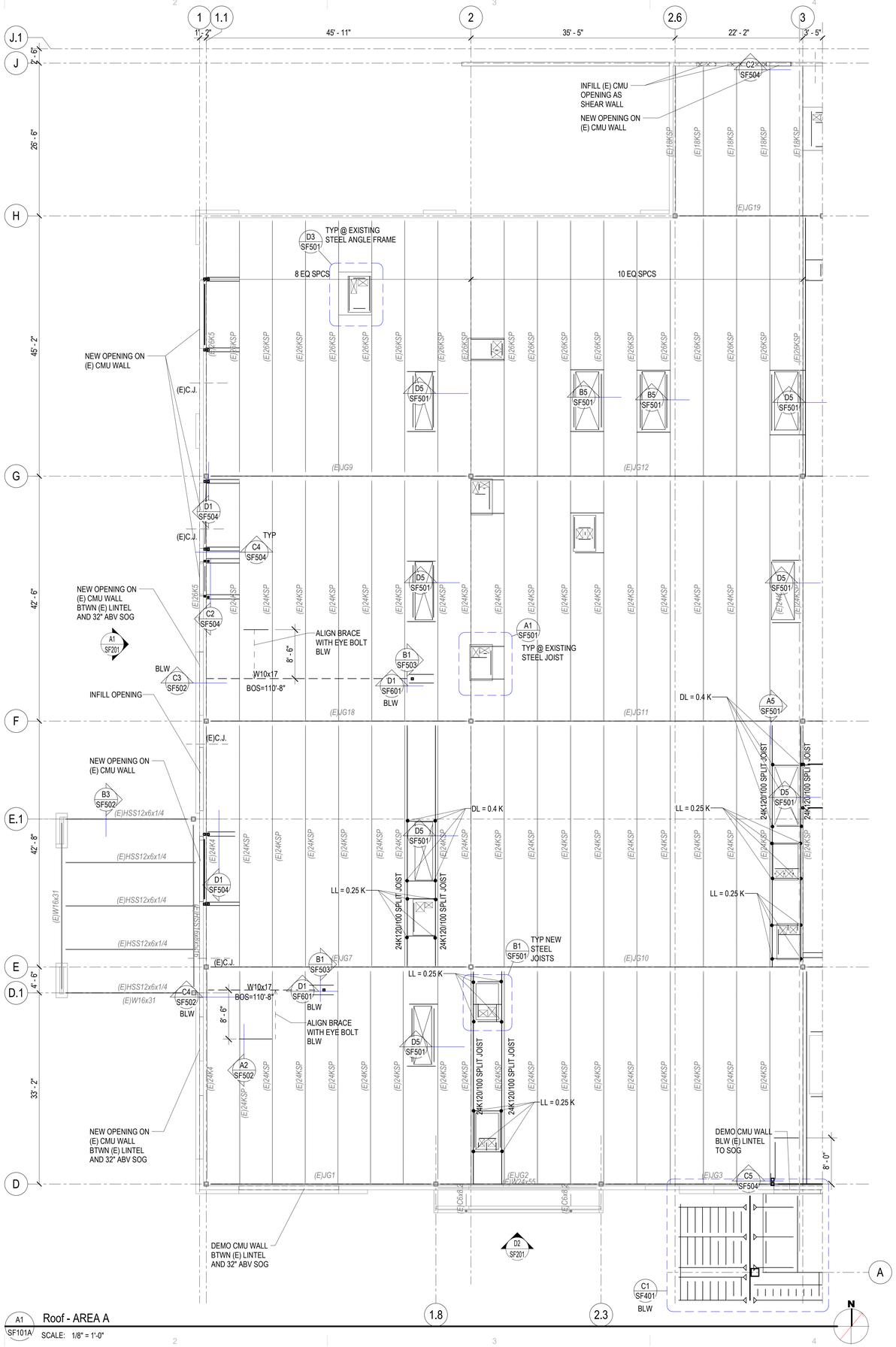

A1 SF101A Roof - AREA A

SCALE: 1/8" = 1'-0"

ROOF FRAMING PLAN NOTES

1. SEE ARCHITECTURAL FOR ROOF SLOPES AND DRAINS.

EXISTING BUILDING NOTES

1. THE CONTRACTOR SHALL FIELD VERIFY ALL EXISTING CONDITIONS PRIOR TO DETAILING, FABRICATING, ERECTING OR INSTALLING ANY STRUCTURAL ELEMENT. ALL DISCREPANCIES SHALL BE BROUGHT TO THE ATTENTION OF THE DESIGN TEAM IN A TIMELY MANNER SUCH THAT WORK WILL NOT BE DELAYED.

2. THE CONTRACTOR SHALL PROVIDE ADEQUATE SHORING OF EXISTING STRUCTURE DURING CONSTRUCTION.

3. INFILL ROOF DECK OPENINGS, SEE TYP DETAIL B3/SF503 .

NON-COMPOSITE FRAMING PLAN NOTES

1. SEE STEEL DECK SCHEDULE ON SHEET SF602 FOR DECK PROFILE AND DECK ATTACHMENT REQUIREMENTS.

2. FOR ROUND OPENINGS LESS THAN 12 INCHES IN DIAMETER SEE DETAILD2/SF501

3. VERIFY SIZE WEIGHT, LOCATION AND CONFIGURATION OF ALL ROOF TOP EQUIPMENT WITH ARCHITECT AND MECHANICAL ENGINEER. PROVIDE STEEL FRAMES FOR SUPPORT OF ROOF TOP EQUIPMENT PER DETAIL D3/SF501AT EXISTING STEEL ANGLE FRAMES, B1/SF501 AT NEW JOISTS, AND A1/SF501 AT EXISTING JOISTS. COORDINATE OPENINGS WITH MECHANICAL & ELECTRICAL.

OPEN WEB JOIST FRAMING PLAN NOTES

1. OPEN WEB STEEL JOISTS AND JOIST GIRDERS SHALL BE DESIGNED BY THE MANUFACTURER TO SUPPORT THE MECHANICAL AND LATERAL LOADS SHOWN ON THE ROOF FRAMING PLANS IN ADDITION TO THE UNIFORM AND POINT LOADS SHOWN. LOADS SHOWN ARE ASD UNO

2. ±#.##k – INDICATES POINT LOAD ON STEEL JOIST IN ADDITION TO UNIFORM LOADING SHOWN. + INDICATES DOWNWARD AND - INDICATES UPWARD LOADS. LOADS SHOWN ARE UNFACTORED, UNO.

3. T/C X.XXK INDICATES ADDITIONAL TOP CHORD AXIAL FORCE ON STEEL JOIST OR GIRDER. THIS FORCE IS A FACTORED SEISMIC LOAD THAT SHALL BE CONSIDERED IN BOTH TENSION AND COMPRESSION AND INCLUDES APPLICABLE OVERSTRENGTH FACTORS PER THE GOVERNING BUILDING CODE. STEEL JOISTS AND GIRDERS WITH T/C FORCE SHALL BE DESIGNED AS COLLECTOR ELEMENTS.

4. ALL LOADS SUPPORTED BY OPEN WEB STEEL JOISTS AND GIRDERS SHALL BE LOCATED WITHIN 6" OF JOIST OR GIRDER PANEL POINT OR THE JOIST OR GIRDER SHALL BE REINFORCED PER DETAIL B4/SF501.

5. HORIZONTAL CROSS BRIDGING SHALL BE SIZED AND SUPPLIED BY THE JOIST MANUFACTURER. CONNECT TO WALLS AS INDICATED ON DETAILS .

6. WHERE SKYLIGHTS OR MECHANICAL UNITS INTERRUPT HORIZONTAL BRIDGING, PROVIDE CROSS BRIDGING AT JOIST SPACES ON EACH SIDE, TYP.

7. ALL OPEN WEB STEEL JOISTS WITH A SLOPE OF 3/8" PER FOOT OR LARGER SHALL HAVE SLOPED BEARING SEATS.

8 OPEN WEB STEEL JOISTS AT ROOF AREAS SHALL BE DESIGNED FOR THE FOLLOWING WIND ASD NET UPLIFT LOADS: 19 PSF WITHIN 11.4 FT OF ROOF EDGES, 11 PSF AT ALL OTHER AREAS.

9. PROVIDE SPLICE CONNECTION NEAR MIDSPAN OF NEW JOISTS FOR INSTALLATION.

MHTN ARCHITECTS

MHTN Architects, Inc.
280 South 400 West
Suite 250
Salt Lake City, Utah 84101
Telephone (801) 595-6700
www.mhtn.com

REAVELEY Engineers
515 East 100 South, Suite 1200
Salt Lake City, Utah 84102
801 486 3883
www.reaveley.com

JORDAN SCHOOL DISTRICT

JORDAN LEARNING CENTER

3706 WEST 9800 SOUTH
SOUTH JORDAN, UT 84009

©2023 MHTN ARCHITECTS, INC.
Confidentiality Notice:
This document is intended for use on the Project identified herein by individuals and companies involved in the design, permitting, bidding and construction of the Project. MHTN Architects, Inc. grants limited rights to distribute and reproduce this document for this express purpose only. Distribution, printing or copying this document for purposes other than those indicated is strictly prohibited. If a digital copy of this document is received in error, please delete it.

SEAL

08/29/24

MHTN PROJECT NO. 2024528

Original drawing is 30 x 42. Do not scale contents of this drawing.

REVISIONS
CONTRACTOR TO VERIFY DRAWINGS IN FIELD USE REFLECT LAST REVISION DATE.

NO.△	DATE	DESCRIPTION

ISSUE
CONSTRUCTION DOCUMENTS 100%
08/29/24

SHEET NAME
ROOF FRAMING PLAN- AREA A

SHEET NUMBER
SF101A

Autodesk Docs://2024528 JSD Retail Remodel/S24 2024528 JSD Retail Remodel.rvt
8/27/2024 7:12:54 PM

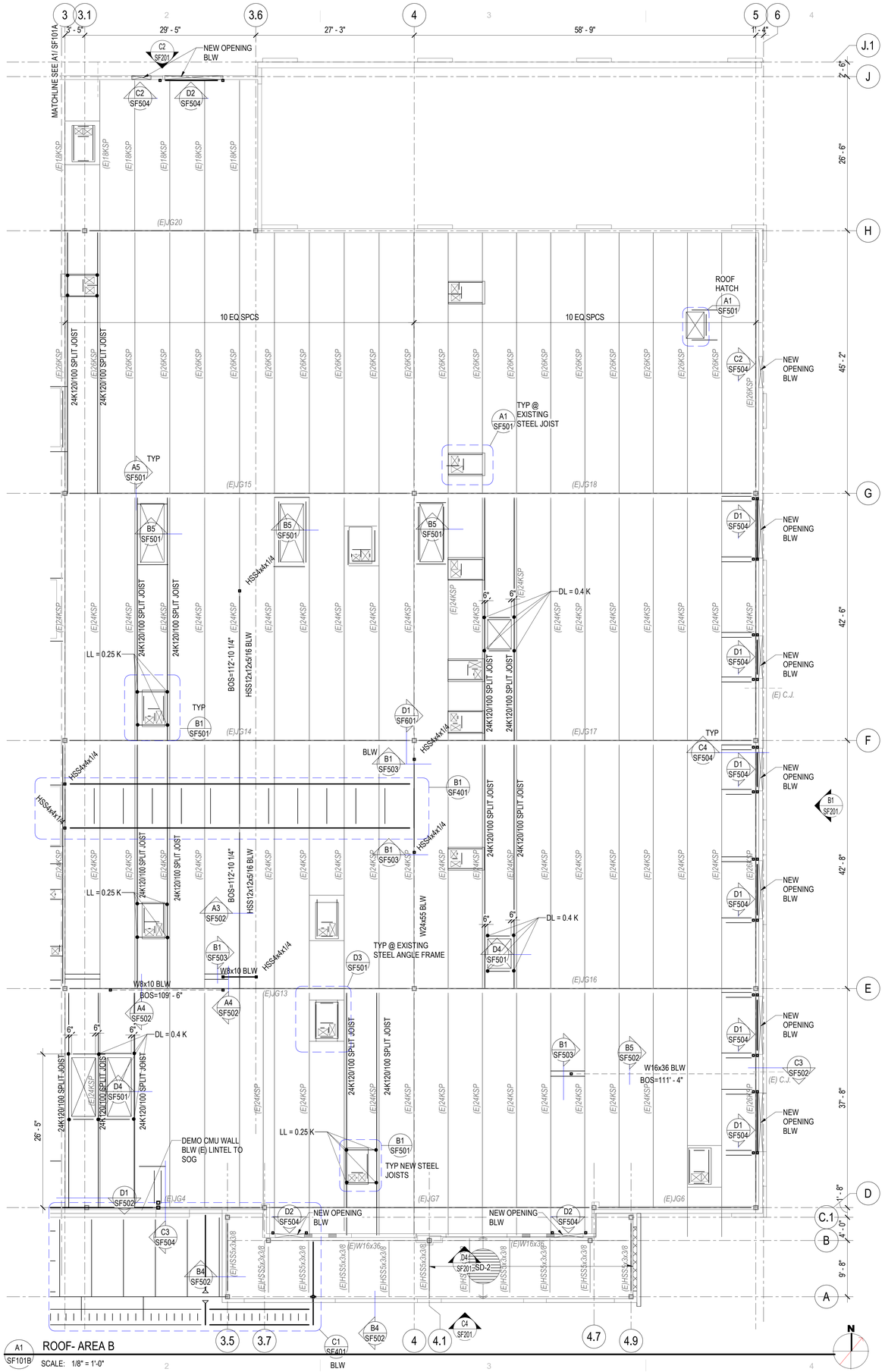

A1 SF101B ROOF- AREA B

SCALE: 1/8" = 1'-0"

ROOF FRAMING PLAN NOTES

1. SEE ARCHITECTURAL FOR ROOF SLOPES AND DRAINS.

EXISTING BUILDING NOTES

1. THE CONTRACTOR SHALL FIELD VERIFY ALL EXISTING CONDITIONS PRIOR TO DETAILING, FABRICATING, ERECTING OR INSTALLING ANY STRUCTURAL ELEMENT. ALL DISCREPANCIES SHALL BE BROUGHT TO THE ATTENTION OF THE DESIGN TEAM IN A TIMELY MANNER SUCH THAT WORK WILL NOT BE DELAYED.

2. THE CONTRACTOR SHALL PROVIDE ADEQUATE SHORING OF EXISTING STRUCTURE DURING CONSTRUCTION.

3. INFILL ROOF DECK OPENINGS, SEE TYP DETAIL B3/SF503 .

NON-COMPOSITE FRAMING PLAN NOTES

1. SEE STEEL DECK SCHEDULE ON SHEET SF602 FOR DECK PROFILE AND DECK ATTACHMENT REQUIREMENTS.

2. FOR ROUND OPENINGS LESS THAN 12 INCHES IN DIAMETER SEE DETAILD2/SF501

3. VERIFY SIZE WEIGHT, LOCATION AND CONFIGURATION OF ALL ROOF TOP EQUIPMENT WITH ARCHITECT AND MECHANICAL ENGINEER. PROVIDE STEEL FRAMES FOR SUPPORT OF ROOF TOP EQUIPMENT PER DETAIL D3/SF501AT EXISTING STEEL ANGLE FRAMES, B1/SF501 AT NEW JOISTS, AND A1/SF501 AT EXISTING JOISTS. COORDINATE OPENINGS WITH MECHANICAL & ELECTRICAL.

OPEN WEB JOIST FRAMING PLAN NOTES

1. OPEN WEB STEEL JOISTS AND JOIST GIRDERS SHALL BE DESIGNED BY THE MANUFACTURER TO SUPPORT THE MECHANICAL AND LATERAL LOADS SHOWN ON THE ROOF FRAMING PLANS IN ADDITION TO THE UNIFORM AND POINT LOADS SHOWN. LOADS SHOWN ARE ASD UNO

2. ±#.##k – INDICATES POINT LOAD ON STEEL JOIST IN ADDITION TO UNIFORM LOADING SHOWN. + INDICATES DOWNWARD AND - INDICATES UPWARD LOADS. LOADS SHOWN ARE UNFACTORED, UNO.

3. T/C X.XXK INDICATES ADDITIONAL TOP CHORD AXIAL FORCE ON STEEL JOIST OR GIRDER. THIS FORCE IS A FACTORED SEISMIC LOAD THAT SHALL BE CONSIDERED IN BOTH TENSION AND COMPRESSION AND INCLUDES APPLICABLE OVERSTRENGTH FACTORS PER THE GOVERNING BUILDING CODE. STEEL JOISTS AND GIRDERS WITH T/C FORCE SHALL BE DESIGNED AS COLLECTOR ELEMENTS.

4. ALL LOADS SUPPORTED BY OPEN WEB STEEL JOISTS AND GIRDERS SHALL BE LOCATED WITHIN 6" OF JOIST OR GIRDER PANEL POINT OR THE JOIST OR GIRDER SHALL BE REINFORCED PER DETAIL B4/SF501.

5. HORIZONTAL CROSS BRIDGING SHALL BE SIZED AND SUPPLIED BY THE JOIST MANUFACTURER. CONNECT TO WALLS AS INDICATED ON DETAILS .

6. WHERE SKYLIGHTS OR MECHANICAL UNITS INTERRUPT HORIZONTAL BRIDGING, PROVIDE CROSS BRIDGING AT JOIST SPACES ON EACH SIDE, TYP.

7. ALL OPEN WEB STEEL JOISTS WITH A SLOPE OF 3/8" PER FOOT OR LARGER SHALL HAVE SLOPED BEARING SEATS.

8 OPEN WEB STEEL JOISTS AT ROOF AREAS SHALL BE DESIGNED FOR THE FOLLOWING WIND ASD NET UPLIFT LOADS: 19 PSF WITHIN 11.4 FT OF ROOF EDGES, 11 PSF AT ALL OTHER AREAS.

9. PROVIDE SPLICE CONNECTION NEAR MIDSPAN OF NEW JOISTS FOR INSTALLATION.

MHTN ARCHITECTS

MHTN Architects, Inc.
280 South 400 West
Suite 250
Salt Lake City, Utah 84101
Telephone (801) 595-6700
www.mhtn.com

REAVELEY Engineers

515 East 100 South, Suite 1200
Salt Lake City, Utah 84102
801 486 3883
www.reaveley.com

JORDAN SCHOOL DISTRICT

JORDAN LEARNING CENTER

3706 WEST 9800 SOUTH
SOUTH JORDAN, UT 84009

©2023 MHTN ARCHITECTS, INC.
Confidentiality Notice:
This document is intended for use on the Project identified herein by individuals and companies involved in the design, permitting, bidding and construction of the Project. MHTN Architects, Inc. grants limited rights to distribute and reproduce this document for this express purpose only. Distribution, printing or copying this document for purposes other than those indicated is strictly prohibited. If a digital copy of this document is received in error, please delete it.

SEAL

PROFESSIONAL STRUCTURAL ENGINEER
No. 8536899-5202
JUSTIN D. NADAULD
STATE OF UTAH

08/29/24

MHTN PROJECT NO. 2024528

Original drawing is 30 x 42. Do not scale contents of this drawing.

REVISIONS
CONTRACTOR TO VERIFY DRAWINGS IN FIELD USE REFLECT LAST REVISION DATE.

NO.	DATE	DESCRIPTION

ISSUE
CONSTRUCTION DOCUMENTS 100%
08/29/24

SHEET NAME
ROOF FRAMING PLAN-AREA B

SHEET NUMBER
SF101B

Autodesk Docs://2024528 JSD Retail Remodel/S24 2024528 JSD Retail Remodel.rvt
8/27/2024 7:12:55 PM

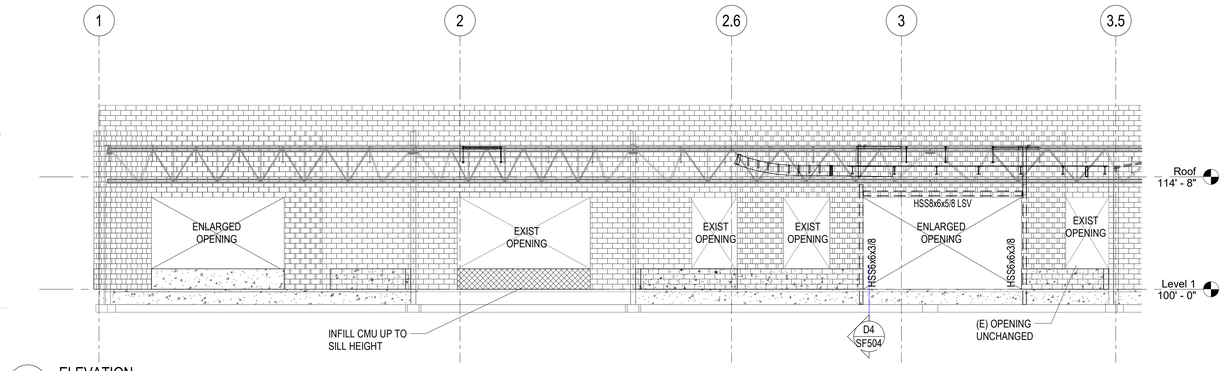

D2 SF201 ELEVATION

SCALE: 1/8" = 1'-0"

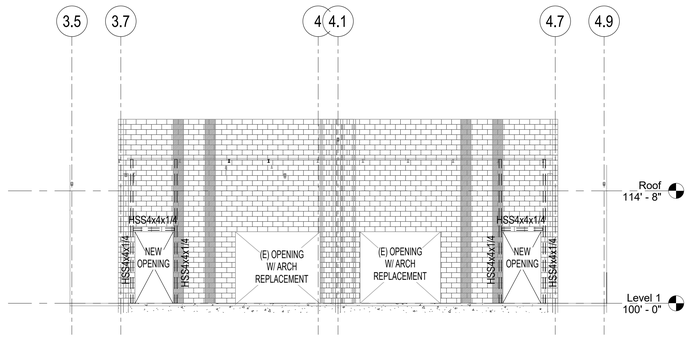

D4 SF201 ELEVATION

SCALE: 1/8" = 1'-0"

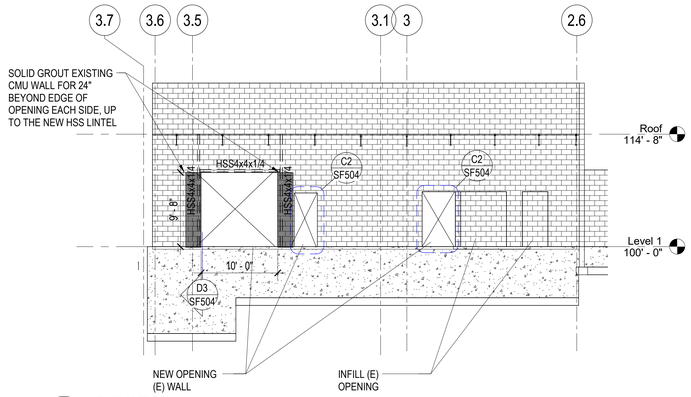

C2 SF201 ELEVATION

SCALE: 1/8" = 1'-0"

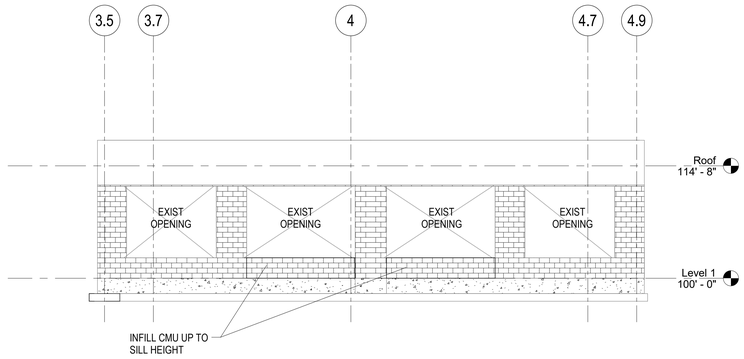

C4 SF201 Elevation 10 - a

SCALE: 1/8" = 1'-0"

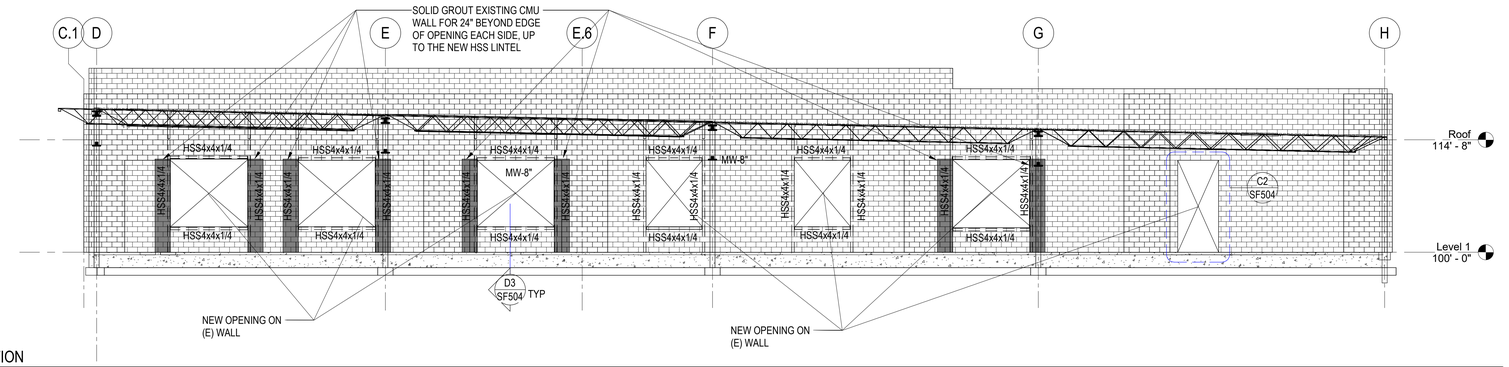

B1 SF201 ELEVATION

SCALE: 1/8" = 1'-0"

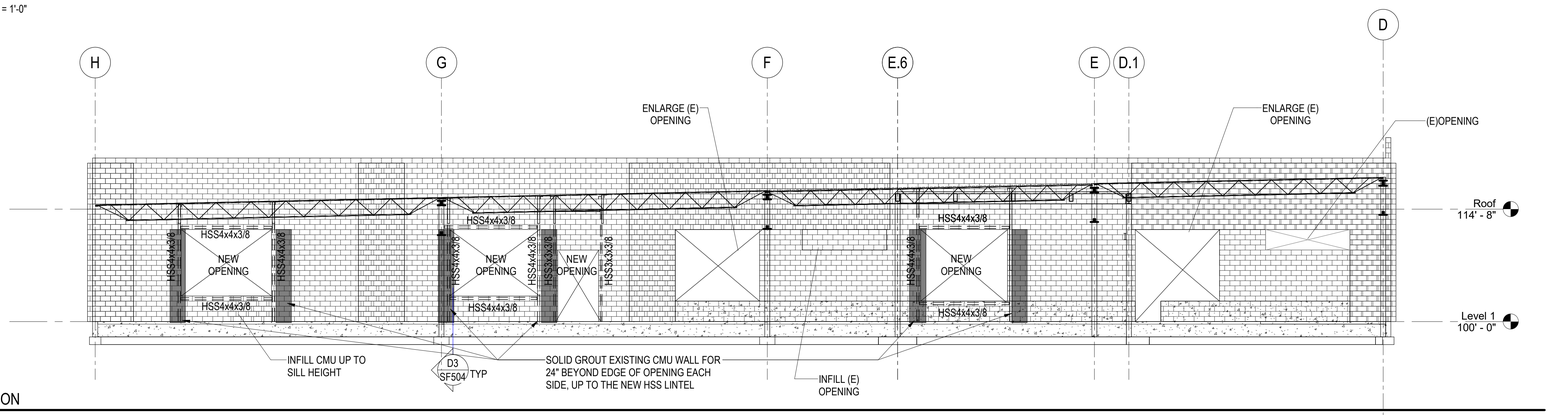

A1 SF201 ELEVATION

SCALE: 1/8" = 1'-0"

MHTN ARCHITECTS

MHTN Architects, Inc.
280 South 400 West
Suite 250
Salt Lake City, Utah 84101
Telephone (801) 595-6700
www.mhtn.com

REAVELEY Engineers

515 East 100 South, Suite 1200
Salt Lake City, Utah 84102
801 486 3883
www.reaveley.com

JORDAN SCHOOL DISTRICT

JORDAN LEARNING CENTER

3706 WEST 9800 SOUTH
SOUTH JORDAN, UT 84009

©2023 MHTN ARCHITECTS, INC.

Confidentiality Notice:
This document is intended for use on the Project identified herein by individuals and companies involved in the design, permitting, bidding and construction of the Project. MHTN Architects, Inc. grants limited rights to distribute and reproduce this document for this express purpose only. Distribution, printing or copying this document for purposes other than those indicated is strictly prohibited. If a digital copy of this document is received in error, please delete it.

SEAL

PROFESSIONAL ENGINEER — STRUCTURAL — No. 8536789-7201 — JUSTIN D. NADAULD — STATE OF UTAH

08/29/24

MHTN PROJECT NO. 2024528

Original drawing is 30 x 42. Do not scale contents of this drawing.

REVISIONS
CONTRACTOR TO VERIFY DRAWINGS IN FIELD USE REFLECT LAST REVISION DATE.

NO.	DATE	DESCRIPTION

ISSUE
CONSTRUCTION DOCUMENTS 100%
08/29/24

SHEET NAME
STRUCTURAL ELEVATIONS

SHEET NUMBER
SF201

Autodesk Docs://2024528 JSD Retail Remodel/S24 2024528 JSD Retail Remodel.rvt
8/27/2024 7:13:02 PM

CANOPY FRAMING PLAN NOTES

1. SEE ARCHITECTURAL FOR ROOF SLOPES AND DRAINS

2. EXPOSED STEEL FRAMING, COLUMNS AND ASSOCIATED BASE PLATES AND ANCHOR BOLTS SHALL BE GALVANIZED G60

3. SEE STEEL DECK SCHEDULE ON SHEET SF602 FOR DECK PROFILE AND DECK ATTACHMENT.

4. AT ENDS OF EXPOSED HSS BEAMS, PROVIDE A 1/8" CLOSURE PLATE. MATCH THE PROFILE OF THE HSS.

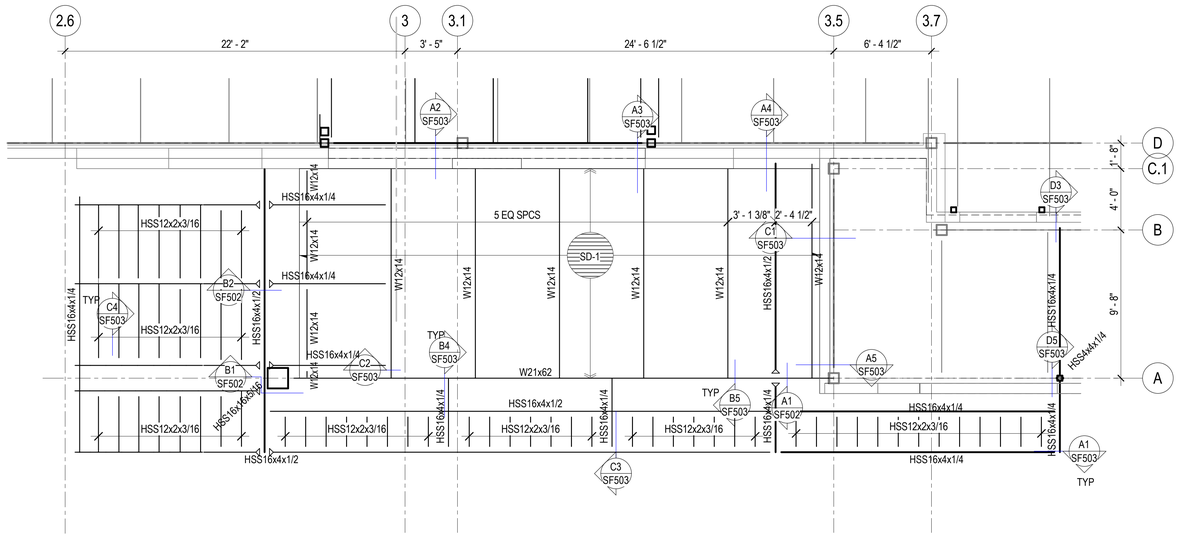

C1 / SF401 CANOPY ENLARGED PLAN

SCALE: 1/4" = 1'-0"

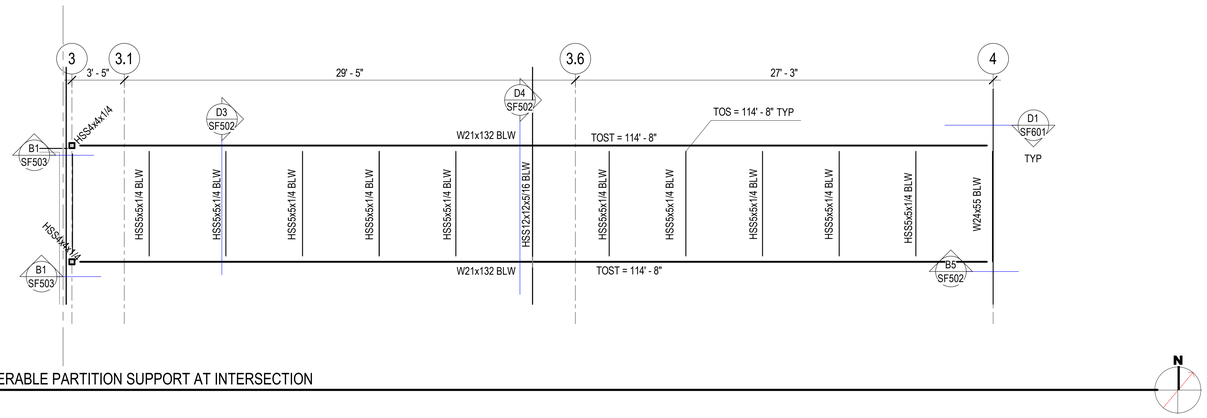

B1 / SF401 ENLARGED VIEW- OPERABLE PARTITION SUPPORT AT INTERSECTION

SCALE: 1/4" = 1'-0"

MHTN ARCHITECTS

MHTN Architects, Inc.
280 South 400 West
Suite 250
Salt Lake City, Utah 84101
Telephone (801) 595-6700
www.mhtn.com

REAVELEY Engineers
515 East 100 South, Suite 1200
Salt Lake City, Utah 84102
801 486 3883
www.reaveley.com

JORDAN SCHOOL DISTRICT

JORDAN LEARNING CENTER

3706 WEST 9800 SOUTH
SOUTH JORDAN, UT 84009

©2023 MHTN ARCHITECTS, INC.

Confidentiality Notice
This document is intended for use on the Project identified herein by individuals and companies involved in the design, permitting, bidding and construction of the Project. MHTN Architects, Inc. grants limited rights to distribute and reproduce this document for such purposes. Any other distribution, publication or reproduction of this document for purposes other than those indicated is strictly prohibited. If a digital copy of this document is received in error, please delete it.

SEAL

PROFESSIONAL STRUCTURAL ENGINEER
No. 10207702-2202
JUSTIN D. NADAULD
STATE OF UTAH

08/29/24

MHTN PROJECT NO. 2024528

Original drawing is 30 x 42. Do not scale contents of this drawing.

REVISIONS
CONTRACTOR TO VERIFY DRAWINGS IN FIELD USE REFLECT LAST REVISION DATE.

NO.△	DATE	DESCRIPTION

ISSUE
CONSTRUCTION DOCUMENTS 100%
08/29/24

SHEET NAME
ENLARGED STRUCTURAL PLANS

SHEET NUMBER
SF401

Autodesk Docs://2024528 -ISD Retail Remodel/S24 2024528 -ISD Retail Remodel.rvt
8/27/2024 1:13:05 PM

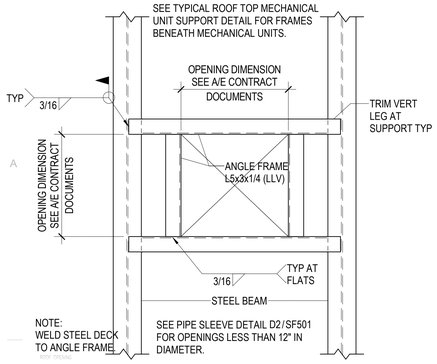

D1 SF501 TYPICAL ROOF OPENING DETAIL (PLAN VIEW)

NO SCALE

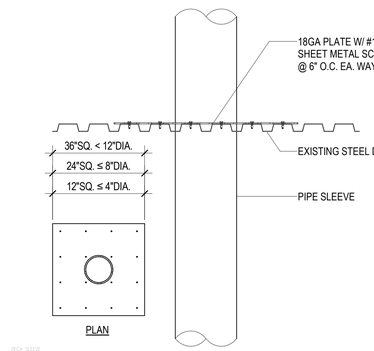

D2 SF501 TYPICAL PIPE SLEEVE HOLE THRU ROOF DECK

NO SCALE

WHERE THE MECHANICAL UNIT WEIGHS LESS THAN 600#, THE L6x4x5/16 SUPPORT ANGLES MAY CHANGED TO L5x3x1/4 (LLV).
SOLID BLOCK THE FLUTES OF THE STEEL DECK BENEATH THE CURB OF THE MECHANICAL UNIT. THIS MAY BE DONE WITH A HSS1.1/2x1.1/2x1/4 x6" LONG TACK WELDED TO THE STEEL DECK OR WITH SOLID BLOCKING CONNECTED TO THE STEEL DECK.

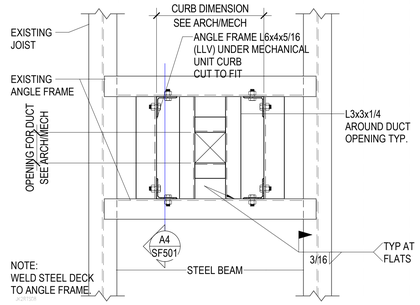

D3 SF501 TYPICAL ROOF TOP MECHANICAL UNIT SUPPORT AT EXISTING UNIT SUPPORT FRAME

NO SCALE

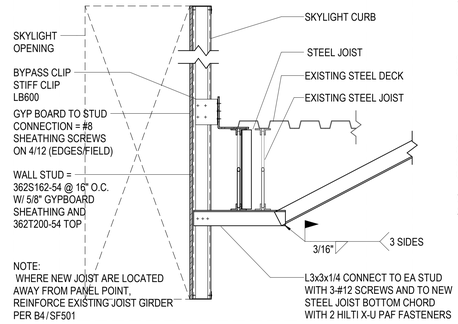

D4 SF501 SKYLIGHT SUPPORTED AT SISTERED JOIST

NO SCALE

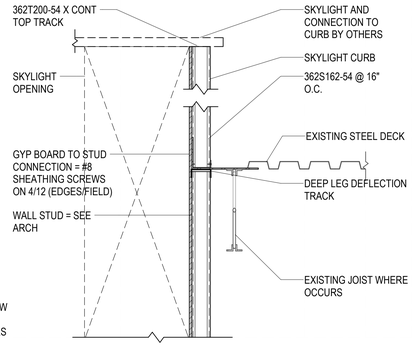

D5 SF501 SKYLIGHT SUPPORTED BY STUD WALL BELOW

NO SCALE

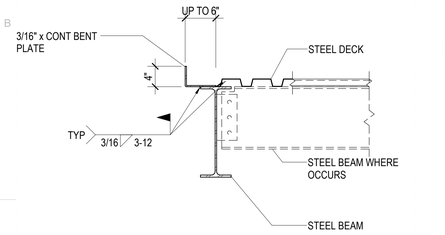

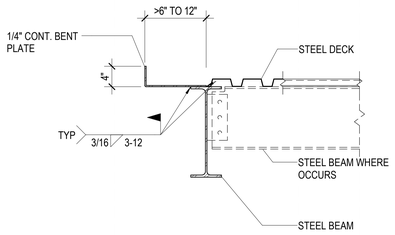

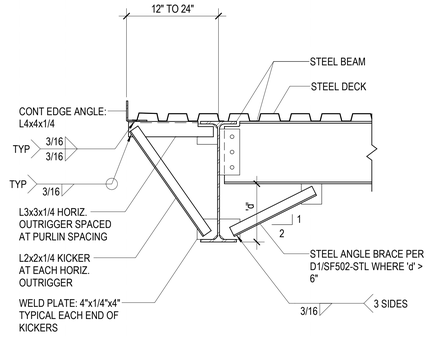

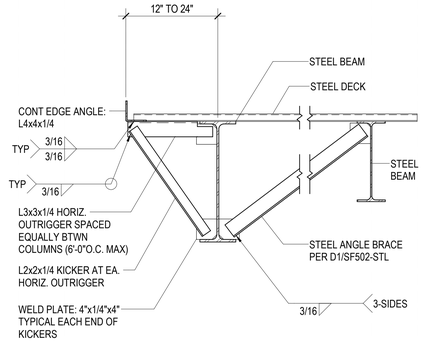

C1 SF501 TYPICAL ROOF EDGE DETAILS AT STEEL BEAMS

NO SCALE

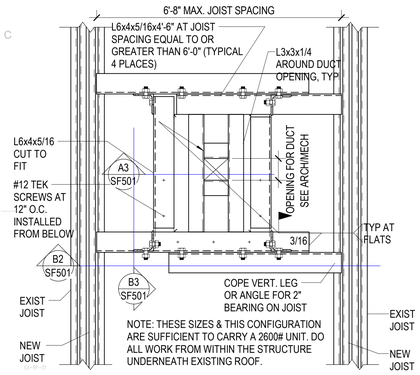

B1 SF501 PLAN VIEW - NEW STEEL FRAME FOR RTU AT SISTERED JOIST

NO SCALE

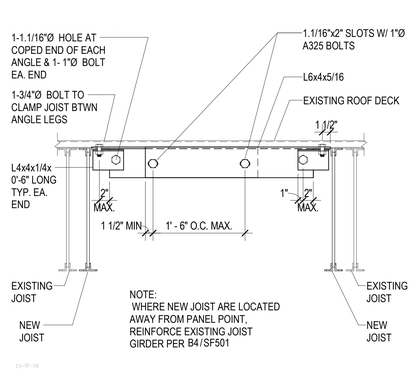

B2 SF501 NEW FRAMING AT NEW STEEL JOIST

NO SCALE

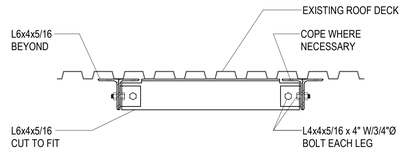

B3 SF501 NEW FRAMING AT EXISTING STEEL JOISTS

NO SCALE

NOTE: WHEN CONCENTRATED LOADS (GREATER THAN 100#) ON NEW OR EXISTING OPEN WEB JOISTS OR GIRDERS ARE LOCATED MORE THAN 6 INCHES FROM THE PANEL WORKPOINTS AT EITHER THE TOP OR BOTTOM CHORD ADDITIONAL DIAGONAL WEB MEMBERS SHALL BE FURNISHED AND INSTALLED AT THE LOCATION OF THE CONCENTRATED LOAD BY THE CONTRACTOR. CONCENTRATED POINT LOADS, SINGLE OR MULTIPLE, TOTALING 100# OR LESS CAN BE LOCATED AT ANY POINT ALONG THE TOP OR BOTTOM CHORD OF AN OPEN WEB JOIST OR GIRDER BETWEEN ADJACENT PANEL POINTS WITHOUT MEETING THESE REQUIREMENTS. A LIMIT OF FOUR CONCENTRATED 100# MAX. POINT LOADS PER JOIST OR GIRDER WILL BE PERMITTED ON SPANS OF 12' & GREATER, ONE CONCENTRATED 100# MAX. LOAD ON SPANS LESS THAN 12', UNLESS SPECIFICALLY NOTED OTHERWISE ON THE DRAWINGS. JOIST BRIDGING SHALL NEVER BE USED TO SUPPORT HANGING LOADS.

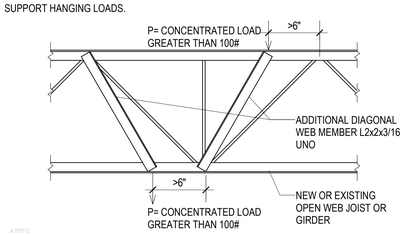

B4 SF501 TYPICAL DETAIL AT ADDITIONAL CONCENTRATED POINT LOAD

NO SCALE

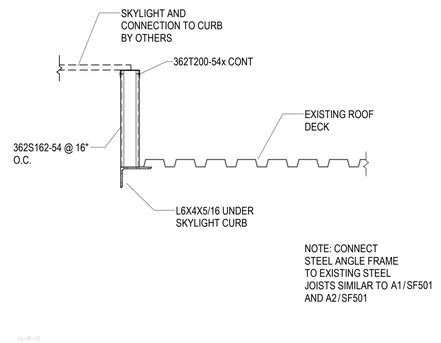

B5 SF501 SUPPORT FOR SKYLIGHT OPEN TO STRUCTURE

NO SCALE

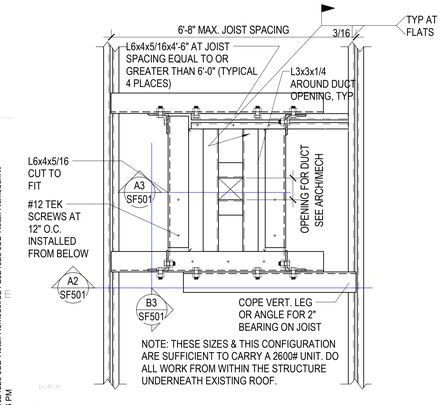

A1 SF501 PLAN VIEW - NEW STEEL FRAME FOR RTU AT EXISTING JOIST

NO SCALE

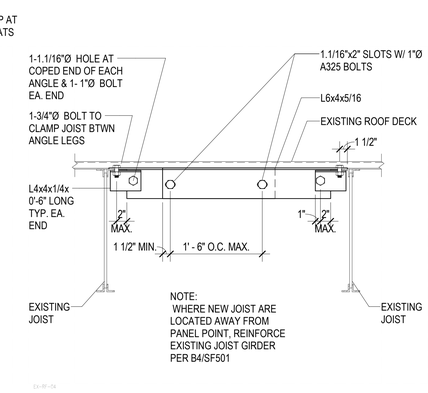

A2 SF501 NEW FRAMING AT EXISTING STEEL JOISTS

NO SCALE

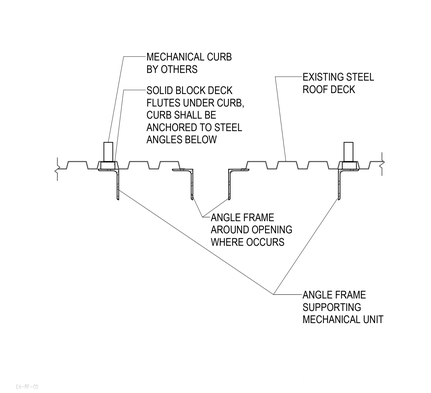

A3 SF501 STEEL ANGLE FRAME UNDER RTU CURB

NO SCALE

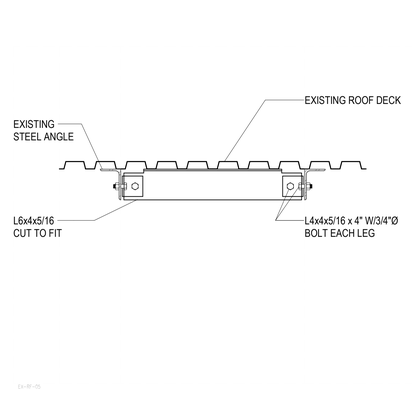

A4 SF501 NEW RTU SUPPORT ANGLE FRAME AT EXISTING ANGLE FRAME

NO SCALE

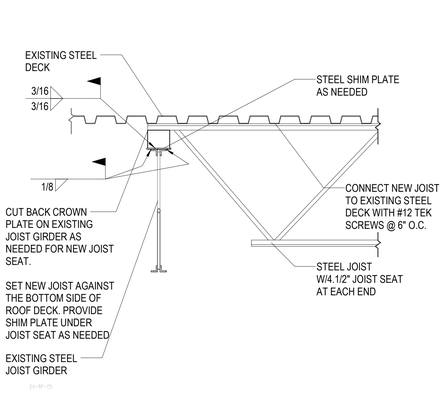

A5 SF501 NEW JOIST TO EXISTING JOIST GIRDER

NO SCALE

MHTN ARCHITECTS
MHTN Architects, Inc.
280 South 400 West
Suite 250
Salt Lake City, Utah 84101
Telephone (801) 595-6700
www.mhtn.com

REAVELEY Engineers
515 East 100 South, Suite 1200
Salt Lake City, Utah 84102
801 486 3883
www.reaveley.com

JORDAN SCHOOL DISTRICT

JORDAN LEARNING CENTER

3706 WEST 9800 SOUTH
SOUTH JORDAN, UT 84009

©2023 MHTN ARCHITECTS, INC.
Confidentiality Notice:
This document is intended for use on the Project identified herein by individuals and companies involved in the design, permitting, bidding and construction of the Project. MHTN Architects, Inc. grants limited rights to distribute and reproduce this document for this express purpose only. Distribution, printing or copying this document for purposes other than those indicated is strictly prohibited. If a digital copy of this document is received in error, please delete it.

SEAL

PROFESSIONAL STRUCTURAL ENGINEER
No. 8866809-2202
JUSTIN D. NADAULD
STATE OF UTAH
08/29/24

MHTN PROJECT NO. 2024528

Original drawing is 30 x 42. Do not scale contents of this drawing.

REVISIONS
CONTRACTOR TO VERIFY DRAWINGS IN FIELD USE REFLECT LAST REVISION DATE.

NO.	DATE	DESCRIPTION

ISSUE
CONSTRUCTION DOCUMENTS 100%
08/29/24

SHEET NAME
TYPICAL ROOF FRAMING DETAILS

SHEET NUMBER
SF501

Autodesk Docs://2024528 JSD Retail Remodel/524 2024528 JSD Retail Remodel.rvt
8/27/2024 7:12:56 PM

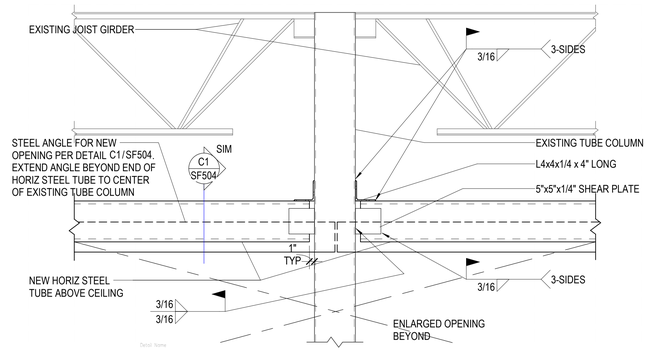

D1 / SF502 OPENING RE-SUPPORT TUBE FRAME TO EXISTING COLUMN CONNECTION

NO SCALE

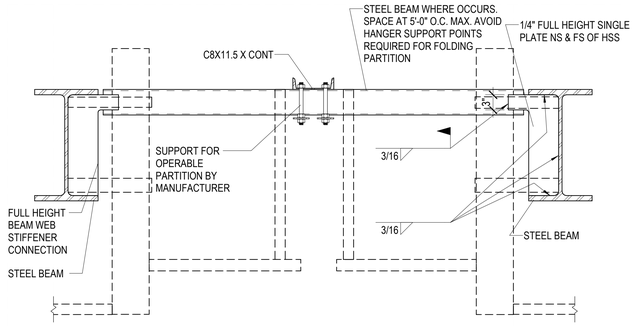

D3 / SF502 OPERABLE PARTITION SUPPORT AT INTERSECTION

NO SCALE

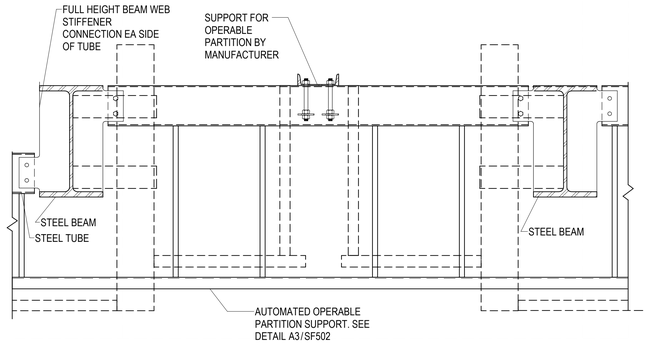

D4 / SF502 OPERABLE PARTITION SUPPORT AT INTERSECTION

NO SCALE

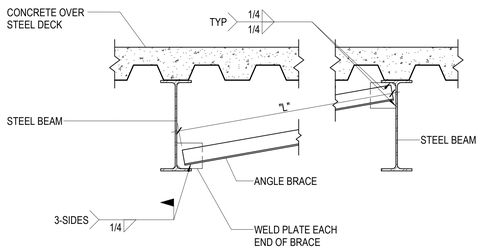

C1 / SF502 TYPICAL STEEL BEAM BOTTOM FLANGE BRACE DETAIL

NO SCALE

ANGLE BRACE SCHEDULE		
BRACE LENGTH "L"	ANGLE BRACE SIZE	WELD PLATE SIZE
UP TO 4'-0"	L2x2x1/4	4"x1/4"x4"
4'-0" TO 8'-0"	L3x3x1/4	4"x1/4"x4"
8'-0" TO 12'-0"	2-L2.1/2x2.1/2x1/4	4"x3/8"x4"
12'-0" TO 16'-0"	2-L3x3x1/4	5"x3/8"x5"

NOTE:
1. WHERE DOUBLE ANGLES ARE USED PROVIDE 3"x3/8" SPACER PLATES AT THIRD POINTS.

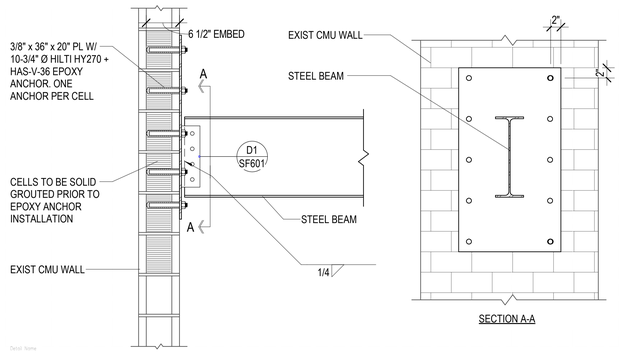

C3 / SF502 STEEL TUBE TO STEEL MOMENT CONNECTION

NO SCALE

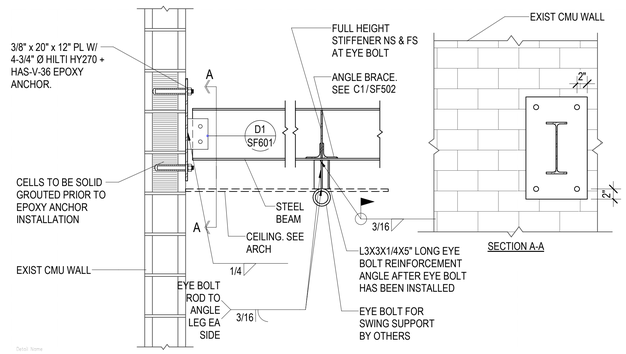

C4 / SF502 SWING SUPPORT CONNECTION TO EXISTING MASONRY

NO SCALE

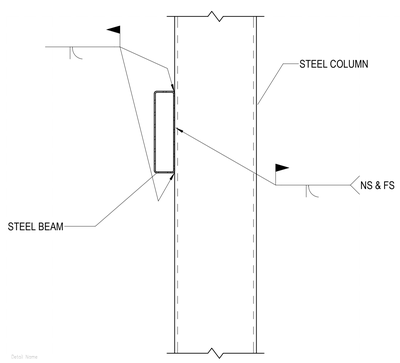

B1 / SF502 STEEL TUBE TO SIDE OF COLUMN

NO SCALE

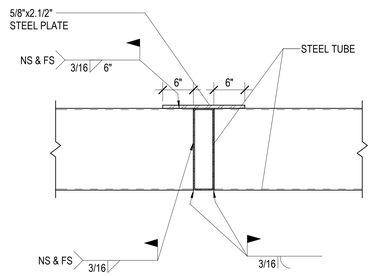

B2 / SF502 STEEL TUBE TO STEEL MOMENT CONNECTION

NO SCALE

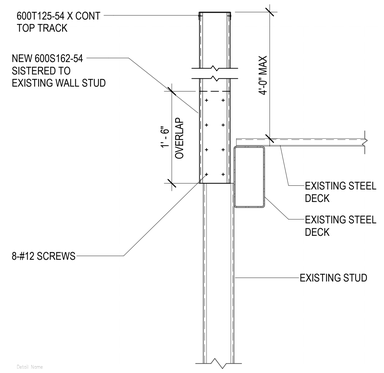

B3 / SF502 PARAPET AT OUTDOOR PLAY

NO SCALE

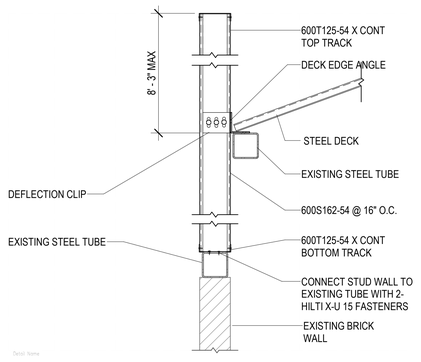

B4 / SF502 NEW PARAPET STUDS

NO SCALE

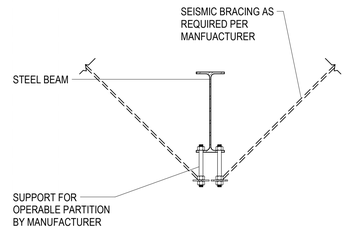

B5 / SF502 MANUAL PARTITION SUPPORT

NO SCALE

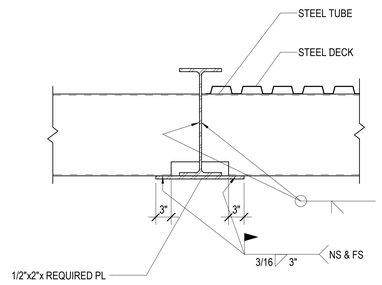

A1 / SF502 STEEL TUBE TO STEEL MOMENT CONNECTION

NO SCALE

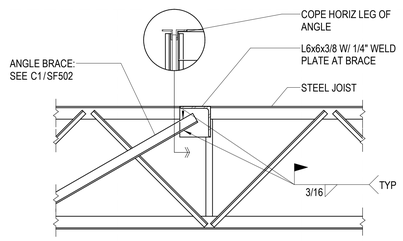

A2 / SF502 TYPICAL BRACE TO TOP CHORD DETAIL

NO SCALE

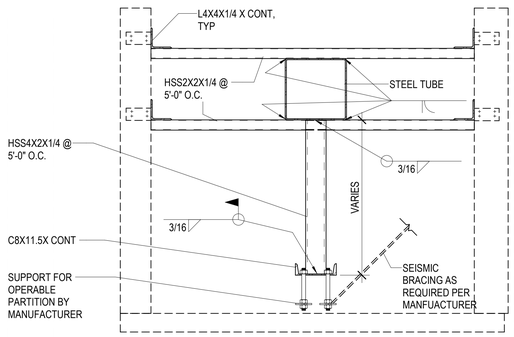

A3 / SF502 AUTOMATED OPERABLE PARTITION SUPPORT

NO SCALE

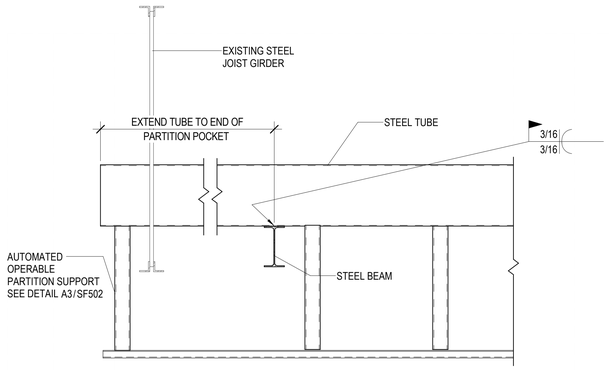

A4 / SF502 STEEL TUBE BEARING DETAIL

NO SCALE

MHTN ARCHITECTS
MHTN Architects, Inc.
280 South 400 West
Suite 250
Salt Lake City, Utah 84101
Telephone (801) 595-6700
www.mhtn.com

REAVELEY Engineers
515 East 100 South, Suite 1200
Salt Lake City, Utah 84102
801 486 3883
www.reaveley.com

JORDAN SCHOOL DISTRICT

JORDAN LEARNING CENTER

3706 WEST 9800 SOUTH
SOUTH JORDAN, UT 84095

©2023 MHTN ARCHITECTS, INC.
Confidentiality Notice
This document is intended for use on the Project identified herein by individuals or entities authorized to be involved in the design, permitting, bidding and construction of the Project. MHTN Architects, Inc. grants limited rights to distribute and reproduce this document for this express purpose only. Distribution, printing or copying this document for purposes other than those indicated is strictly prohibited. If a digital copy of this document is received in error, please delete it.

SEAL

PROFESSIONAL ENGINEER STRUCTURAL No. 9089202 JUSTIN D. NADAULD STATE OF UTAH

08/29/24

MHTN PROJECT NO. 2024528

Original drawing is 30 x 42. Do not scale contents of this drawing.

REVISIONS
CONTRACTOR TO VERIFY DRAWINGS IN FIELD USE REFLECT LAST REVISION DATE.

NO.	DATE	DESCRIPTION

ISSUE
CONSTRUCTION DOCUMENTS 100%
08/29/24

SHEET NAME
ROOF FRAMING DETAILS

SHEET NUMBER
SF502

Autodesk Docs://2024528 JSD Retail Remodel/524 2024528 JSD Retail Remodel.rvt
8/27/2024 7:12:57 PM

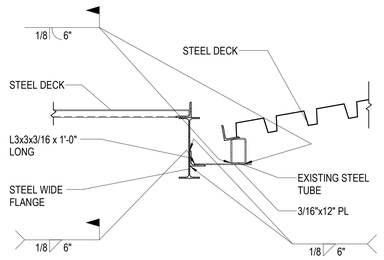

C1 / SF503 — CANOPY DIAPHRGAM CONNECT TO EXISTING ROOF

NO SCALE

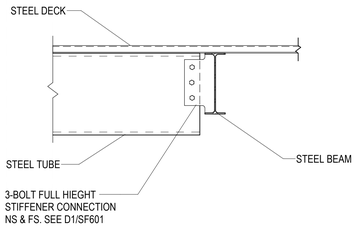

C2 / SF503 — STEEL TUBE CONNECTION TO WF BEAM

NO SCALE

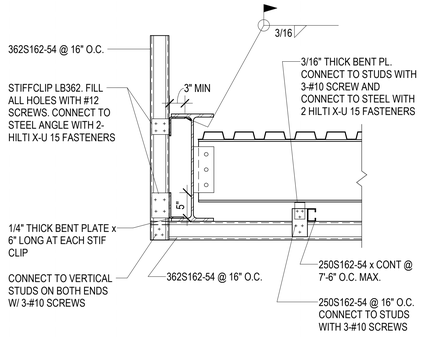

C3 / SF503 — SOFFIT CONNECTION

NO SCALE

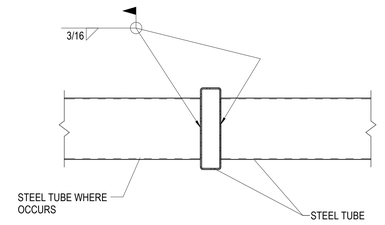

C4 / SF503 — TYPICAL TRELLIS MEMBER CONNECTION

NO SCALE

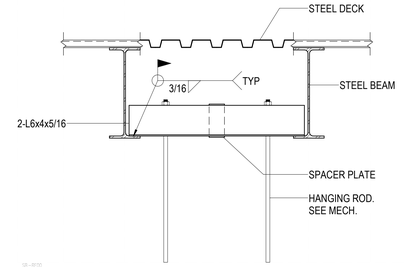

C5 / SF503 — TYPICAL HANGING MECHANICAL UNIT SUPPORT DETAIL

NO SCALE

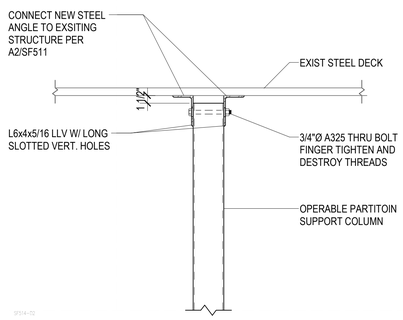

B1 / SF503 — TYPICAL OPERABLE PARTITION SUPPORT COLUMN BRACING AT TOP

NO SCALE

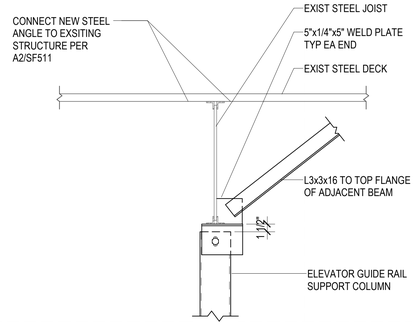

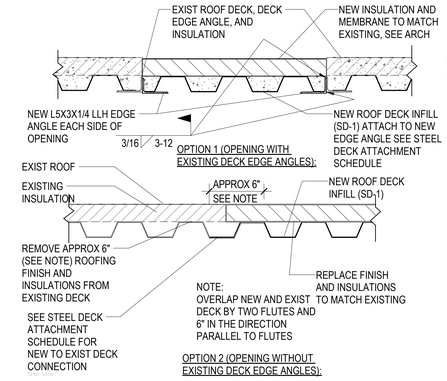

B3 / SF503 — TYP ROOF DECK INFILL DETAIL

NO SCALE

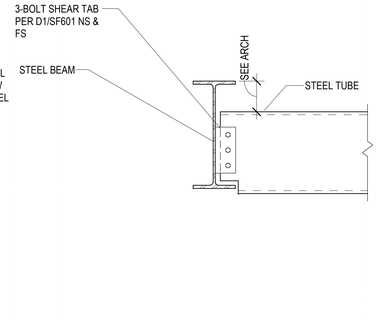

B4 / SF503 — STEEL TUBE TO STEEL BEAM

NO SCALE

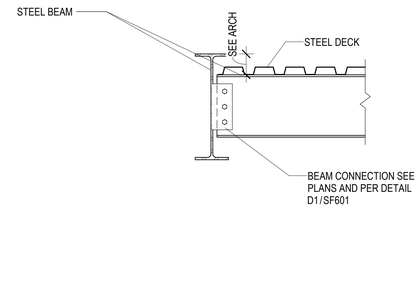

B5 / SF503 — STEEL BEAM CONNECTION AT CANOPY

NO SCALE

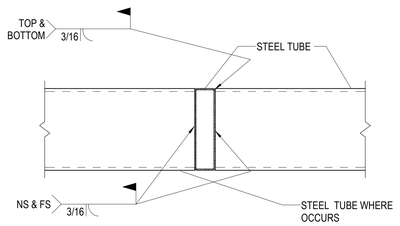

A1 / SF503 — STEEL TUBE TO STEEL BEAM

NO SCALE

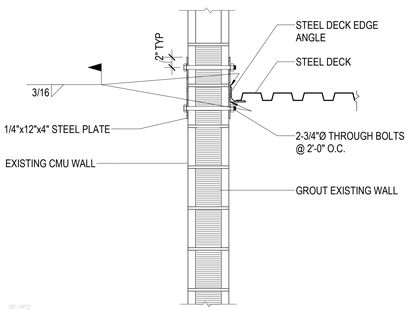

A2 / SF503 — DECK EDGE TO EXISTING CMU WALL

NO SCALE

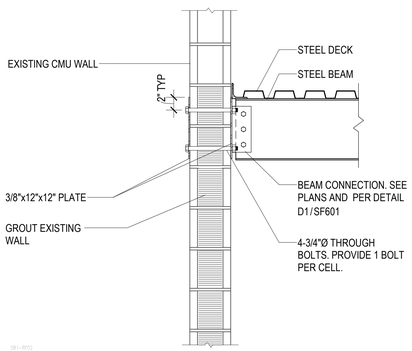

A3 / SF503 — NEW STEEL BEAM TO EXISTING CMU WALL

NO SCALE

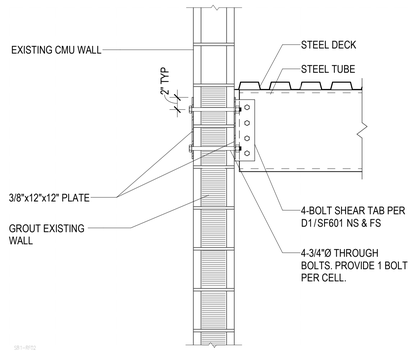

A4 / SF503 — NEW STEEL TUBE TO EXISTING CMU WALL

NO SCALE

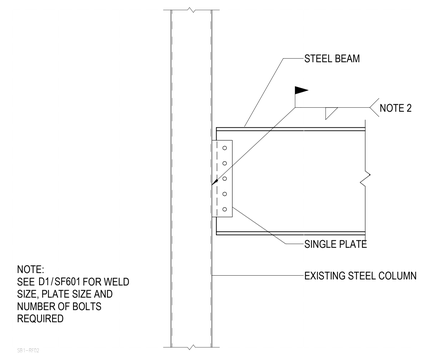

NOTE:
SEE D1/SF601 FOR WELD SIZE, PLATE SIZE AND NUMBER OF BOLTS REQUIRED

A5 / SF503 — NEW STEEL BEAM TO EXISTING COLUMN

NO SCALE

MHTN ARCHITECTS
MHTN Architects, Inc.
280 South 400 West
Suite 250
Salt Lake City, Utah 84101
Telephone (801) 595-6700
www.mhtn.com

REAVELEY Engineers
515 East 100 South, Suite 1200
Salt Lake City, Utah 84102
801 486 3883
www.reaveley.com

JORDAN SCHOOL DISTRICT

JORDAN LEARNING CENTER

3706 WEST 9800 SOUTH
SOUTH JORDAN, UT 84009

©2023 MHTN ARCHITECTS, INC.

Confidentiality Notice:
This document is intended for use on the Project identified herein by individuals and companies involved in the design, permitting, bidding and construction of the Project. MHTN Architects, Inc. grants limited rights to distribute and reproduce this document for this express purpose only. Distribution, printing or copying this document for purposes other than those indicated is strictly prohibited. If a digital copy of this document is received in error, please delete it.

SEAL

PROFESSIONAL STRUCTURAL ENGINEER
No. 10369107
JUSTIN D. NADAULD
STATE OF UTAH

08/29/24

MHTN PROJECT NO. 2024528

Original drawing is 30 x 42. Do not scale contents of this drawing.

REVISIONS
CONTRACTOR TO VERIFY DRAWINGS IN FIELD USE REFLECT LAST REVISION DATE.

NO.	DATE	DESCRIPTION

ISSUE
CONSTRUCTION DOCUMENTS 100%
08/29/24

SHEET NAME
ROOF FRAMING DETAILS

SHEET NUMBER
SF503

Autodesk Docs://2024528 JSD Retail Remodel/S24 2024528 JSD Retail Remodel.rvt
8/27/2024 7:12:58 PM

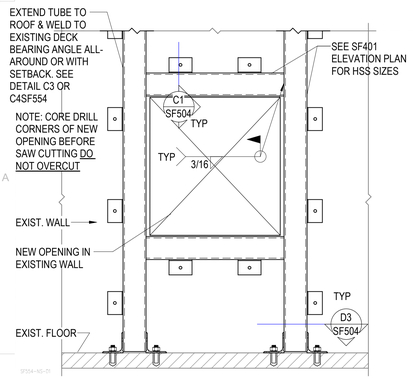

D1 SF504 TYPICAL NEW OPENING REINFORCING IN EXISTING WALL USING STEEL TUBES

NO SCALE

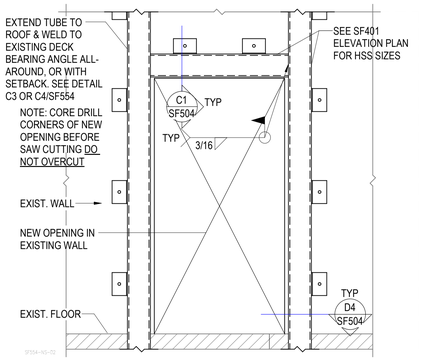

D2 SF504 TYPICAL NEW OPENING REINFORCING IN EXISTING WALL USING STEEL TUBES

NO SCALE

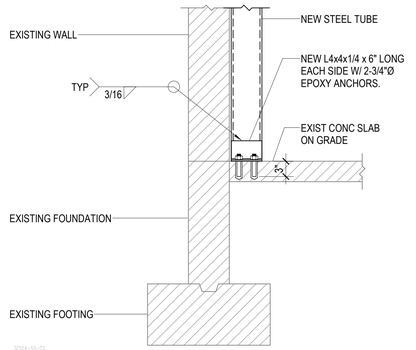

D3 SF504 TYPICAL CONNECTION OF NEW STEEL TUBE TO EXISTING CONCRETE SALB ON GRADE

NO SCALE

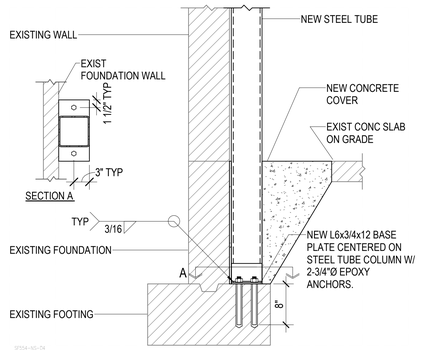

D4 SF504 TYPICAL CONNECTION OF NEW STEEL TUBE TO EXISTING CONCRETE SALB ON GRADE

NO SCALE

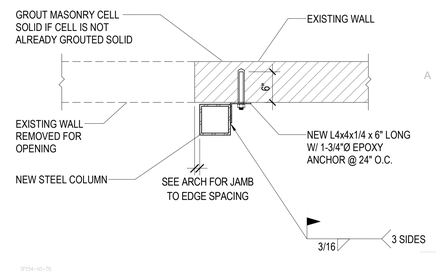

D5 SF504 TYPICAL NEW STEEL TUBE CONNECTION TO EXISTING WALL (JAMB, PLAN VIEW)

NO SCALE

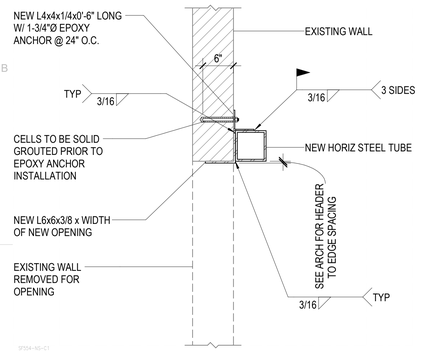

C1 SF504 TYPICAL NEW STEEL TUBE CONNECTION TO EXISTING WALL (HEAD)

NO SCALE

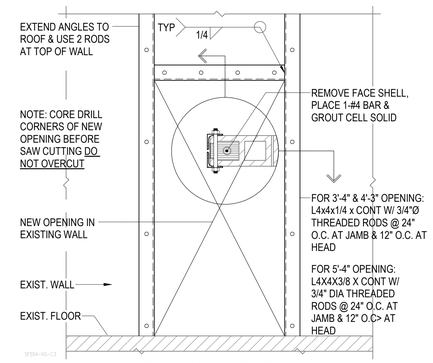

C2 SF504 TYPICAL NEW OPENING REINFORCING IN EXISTING WALL USING STEEL ANGLES

NO SCALE

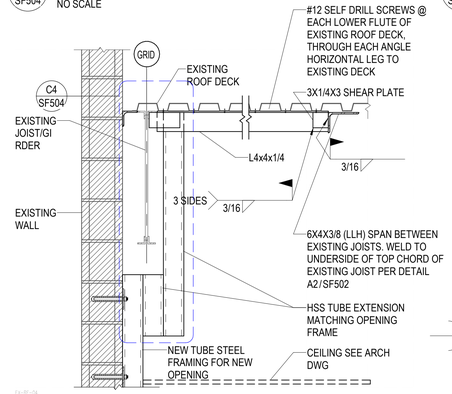

C3 SF504 TOP OF NEW OPENING FRAMING TO EXISTING ROOF DECK CONNECTIONS

NO SCALE

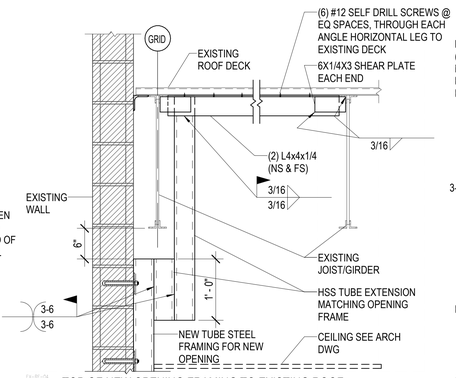

C4 SF504 TOP OF NEW OPENING FRAMING TO EXISTING ROOF DECK CONNECTIONS

NO SCALE

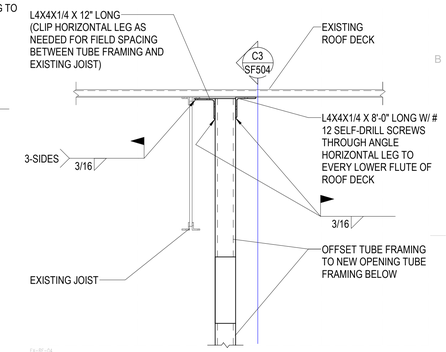

C5 SF504 NEW FRAMING AT NEW STEEL JOIST

NO SCALE

MHTN ARCHITECTS

MHTN Architects, Inc.
280 South 400 West
Suite 250
Salt Lake City, Utah 84101
Telephone (801) 595-6700
www.mhtn.com

REAVELEY Engineers

515 East 100 South, Suite 1200
Salt Lake City, Utah 84102
801 486 3883
www.reaveley.com

JORDAN SCHOOL DISTRICT

JORDAN LEARNING CENTER

3706 WEST 9800 SOUTH
SOUTH JORDAN, UT 84009

©2023 MHTN ARCHITECTS, INC.

Confidentiality Notice:
This document is intended for use on the Project identified herein by individuals and companies involved in the design, permitting, bidding and construction of the Project. MHTN Architects, Inc. grants limited rights to distribute and reproduce this document for this express purpose only. Distribution, printing or copying this document for purposes other than those indicated is strictly prohibited. If a digital copy of this document is received in error, please delete it.

SEAL

08/29/24

MHTN PROJECT NO. 2024528

Original drawing is 30 x 42. Do not scale contents of this drawing.

REVISIONS
CONTRACTOR TO VERIFY DRAWINGS IN FIELD USE REFLECT LAST REVISION DATE.

NO.△	DATE	DESCRIPTION

ISSUE
CONSTRUCTION DOCUMENTS 100%
08/29/24

SHEET NAME
NEW WALL OPENINGS

SHEET NUMBER
SF504

Autodesk Docs://2024528 JSD Retail Remodel/524 2024528 JSD Retail Remodel.rvt
8/27/2024 7:13:03 PM

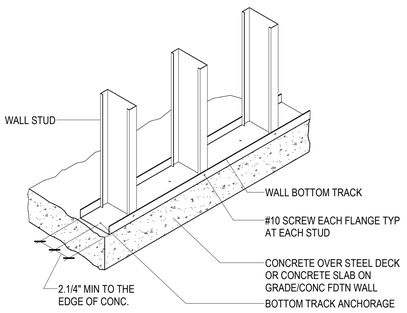

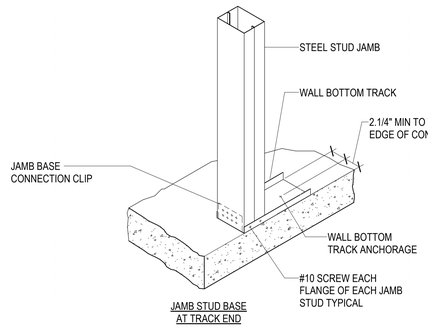

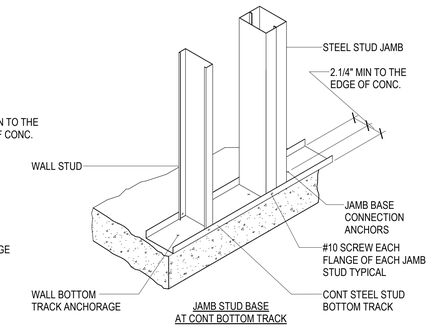

D1 / SF505 TYPICAL BOTTOM TRACK ANCHORAGE DETAILS

NO SCALE

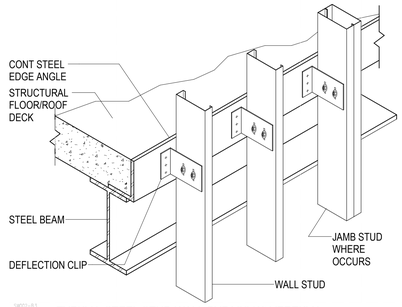

D4 / SF505 TYPICAL STEEL STUD WALL BYPASS W/ VERTICAL DEFLECTION

NO SCALE

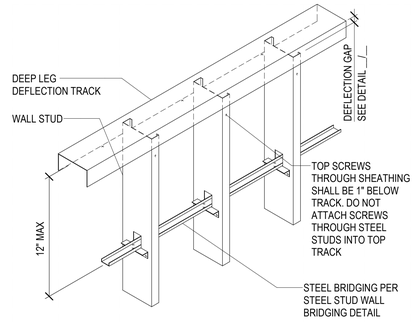

D5 / SF505 TYPICAL STEEL STUD WALL DEFLECTION TRACK ASSEMBLY DETAIL - SINGLE TRACK

NO SCALE

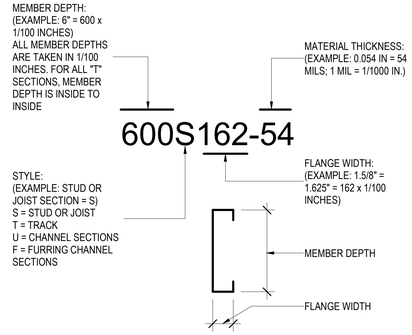

C5 / SF505 STEEL STUD MANUFACTURERS ASSOCIATION - NOMENCLATURE

NO SCALE

MHTN ARCHITECTS
MHTN Architects, Inc.
280 South 400 West
Suite 250
Salt Lake City, Utah 84101
Telephone (801) 595-6700
www.mhtn.com

REAVELEY Engineers
515 East 100 South, Suite 1200
Salt Lake City, Utah 84102
801 486 3883
www.reaveley.com

JORDAN SCHOOL DISTRICT

JORDAN LEARNING CENTER

3706 WEST 9800 SOUTH
SOUTH JORDAN, UT 84009

©2023 MHTN ARCHITECTS, INC.

Confidentiality Notice:
This document is intended for use on the Project identified herein by individuals and companies involved in the design, permitting, bidding and construction of the Project. MHTN Architects, Inc. grants limited rights to distribute and reproduce this document for this express purpose only. Distribution, printing or copying this document for purposes other than those indicated is strictly prohibited. If a digital copy of this document is received in error, please delete it.

SEAL

PROFESSIONAL STRUCTURAL ENGINEER
No. 10369705-2202
JUSTIN D. NADAULD
STATE OF UTAH

08/29/24

MHTN PROJECT NO. 2024528

Original drawing is 30 x 42. Do not scale contents of this drawing.

REVISIONS
CONTRACTOR TO VERIFY DRAWINGS IN FIELD USE REFLECT LAST REVISION DATE.

NO.△	DATE	DESCRIPTION

ISSUE
CONSTRUCTION DOCUMENTS
08/29/24

SHEET NAME
EXTERIOR STEEL STUD DETAILS

SHEET NUMBER
SF505

Autodesk Docs://2024528 JSD Retail Remodel/524 2024528 JSD Retail Remodel.rvt
8/27/2024 7:13:06 PM

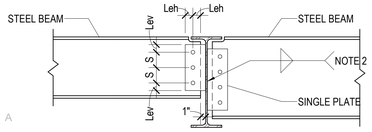

BEAM TO BEAM CONNECTION

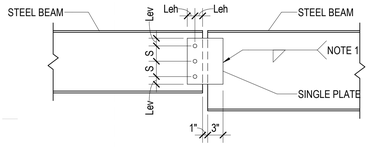

BEAM TO BEAM CONNECTION

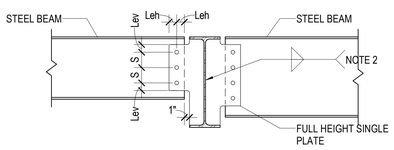

BEAM TO BEAM CONNECTION AT FULL HEIGHT STIFFENER

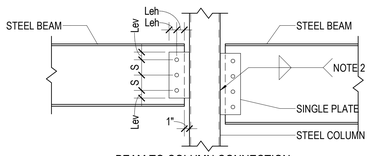

BEAM TO COLUMN CONNECTION

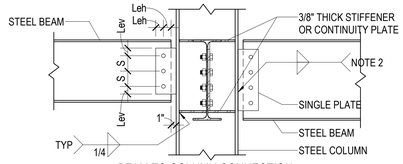

BEAM TO COLUMN CONNECTION

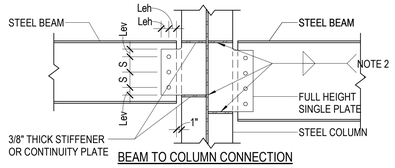

BEAM TO COLUMN CONNECTION

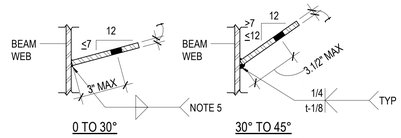

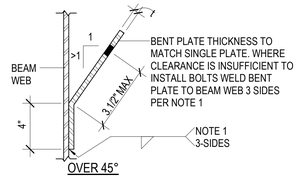

SKEWED CONNECTION (PLAN VIEW)

SINGLE PLATE CONNECTION SCHEDULE			
BEAM SIZE	WEB PLATE THICKNESS (t)	A325N BOLTS	
		NUMBER	SIZE
W8 AND W10	3/8"	2	7/8"Ø
W12 AND W14	3/8"	3	7/8"Ø
W16	3/8"	4	7/8"Ø
W18 AND W21	3/8"	5	7/8"Ø
W24	3/8"	6	7/8"Ø
W27	3/8"	7	7/8"Ø
W30	3/8"	8	7/8"Ø
W33	3/8"	9	7/8"Ø
W36	3/8"	10	7/8"Ø
W40	3/8"	11	7/8"Ø
W44	3/8"	12	7/8"Ø

NOTES:
1. FILLET WELDS ONE SIDE SHALL EQUAL THE PLATE THICKNESS MINUS 1/16" (1/4" MIN.)
2. FILLET WELDS TWO SIDES SHALL BE 5/8 THE PLATE THICKNESS (1/4" MIN.) EACH SIDE
3. BOLT EDGE DISTANCE SHALL BE AS FOLLOWS: Leh = 2 x BOLT DIAMETER; Lev = 1.1/2".
4. BOLT SPACING (S) SHALL BE 3".
5. AT SKEWED JOINTS PROVIDE AN EQUIVALENT LEG SIZE TO NOTE 2 PER AWS D1.1.
6. PROVIDE SHORT SLOTTED HOLES WHEN 6 OR MORE BOLTS ARE REQUIRED AND BOLT DIAMETER IS ≤ 3/4".

D1 / SF601 TYPICAL SINGLE PLATE CONNECTION DETAILS AND SCHEDULE

NO SCALE

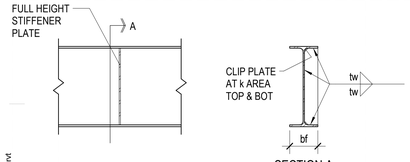

SECTION A

WELD SCHEDULE		
bf	THICKNESS*	tw
UP TO 8.25"	1/4"	3/16"
> 8.25" ≤ 12.25"	3/8"	1/4"
> 12.25" ≤ 16.5"	1/2"	5/16"
> 16.5" ≤ 22"	5/8"	5/16"

* STIFFENER THICKNESS IS BASED UPON WIDTH OF BEAM FLANGE (bf) UNLESS NOTED OTHERWISE IN DETAILS

A1 / SF601 TYPICAL STIFFENER PLATE DETAIL

NO SCALE

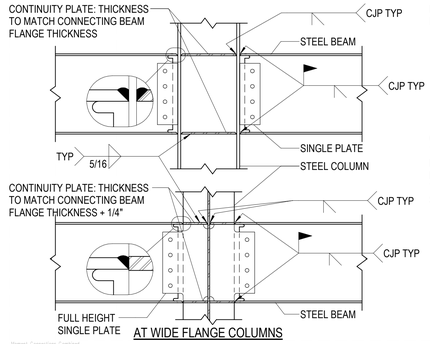

AT WIDE FLANGE COLUMNS

NOTE: SEE TYPICAL WELD ACCESS HOLE DETAIL A5/SF601 FOR DETAILING.

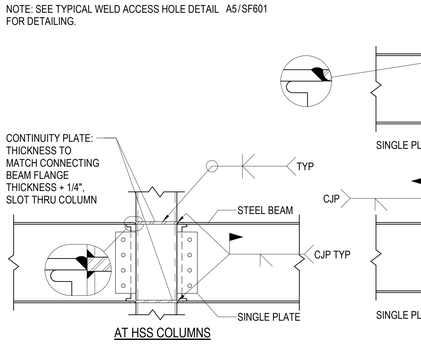

AT HSS COLUMNS

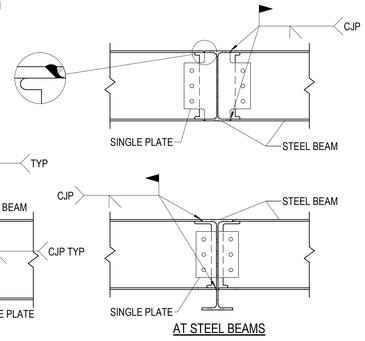

AT STEEL BEAMS

A2 / SF601 TYPICAL GRAVITY BEAM MOMENT CONNECTION

NO SCALE

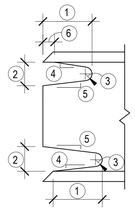

ROLLED SHAPES AND BUILT-UP SHAPES ASSEMBLED PRIOR TO CUTTING THE WELD ACCESS HOLE.

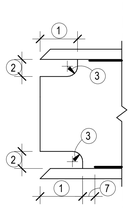

BUILT-UP SHAPES ASSEMBLED AFTER CUTTING THE WELD ACCESS HOLE.

NOTES:

1. LENGTH: NOT LESS THAN THE GREATER OF 1.5 x WEB THICKNESS OR 1.1/2"
2. HEIGHT: NOT LESS THAN THE GREATER OF 1.0 x WEB THICKNESS OR 3/4" BUT NEED NOT EXCEED 2"
3. RADIUS: 3/8" MIN. GRIND THE THERMALLY CUT SURFACES OF WELD ACCESS HOLES IN HEAVY SHAPES AS DEFINED IN AISC 360-16 SECTIONS A3.1(c) AND (d).
4. SLOPE FORMS A TRANSITION FROM WEB TO THE FLANGE.
5. SLOPE MAY BE HORIZONTAL.
6. THE BOTTOM OF THE TOP FLANGE IS TO BE CONTOURED TO PERMIT THE TIGHT FIT BACKING BARS WHERE THEY ARE TO BE USED.
7. THE WEB-TO-FLANGE WELD OF BUILT-UP MEMBERS IS TO BE HELD BACK A DISTANCE OF AT LEAST THE WELD SIZE FROM THE EDGE OF THE ACCESS HOLE.

A5 / SF601 TYPICAL WELD ACCESS HOLE DETAIL

NO SCALE

MHTN ARCHITECTS

MHTN Architects, Inc.
280 South 400 West
Suite 250
Salt Lake City, Utah 84101
Telephone (801) 595-6700
www.mhtn.com

REAVELEY Engineers
515 East 100 South, Suite 1200
Salt Lake City, Utah 84102
801 486 3883
www.reaveley.com

JORDAN SCHOOL DISTRICT

JORDAN LEARNING CENTER

3706 WEST 9800 SOUTH
SOUTH JORDAN, UT 84009

©2023 MHTN ARCHITECTS, INC.

Confidentiality Notice
This document is intended for use on the Project identified herein by individuals and companies involved in the design, permitting, bidding and construction of the Project. MHTN Architects, Inc. grants limited rights to distribute and reproduce this document for purposes of the Project only. Any other sharing or reproduction of this document for purposes other than those indicated is strictly prohibited. If a digital copy of this document is received in error, please delete it.

SEAL

08/29/24

MHTN PROJECT NO. 2024528

Original drawing is 30 x 42. Do not scale contents of this drawing.

REVISIONS
CONTRACTOR TO VERIFY DRAWINGS IN FIELD USE REFLECT LAST REVISION DATE.

NO.△	DATE	DESCRIPTION

ISSUE
CONSTRUCTION DOCUMENTS 100%
08/29/24

SHEET NAME
TYPICAL STEEL FRAMING SCHEDULES

SHEET NUMBER
SF601

Autodesk Docs://2024528 JSD Retail Remodel/S24 2024528 JSD Retail Remodel.rvt
8/27/2024 1:13:00 PM

STEEL DECK SCHEDULE

MARK	STEEL DECK				CONCRETE FILL			STEEL DECK ATTACHMENT	MIN. ALLOWABLE SHEAR CAPACITY	NOTES
	PROFILE	MIN I (in⁴/ft)	MIN S (in³/ft)	FINISH	THICKNESS (t)	TYPE	REINFORCEMENT			
SD-1	TYPE B 1.1/2" DEEP x 20 GA	0.219	0.230	GALVANIZED (G60)	-	-	-	SDA-1	1304 PLF @ 6'-0"	-
SD-2	TYPE N 3" DEEP x 20 GA	0.890	0.452	GALVANIZED (G60)	-	-	-	SDA-2	964 PLF @ 7' - 0"	-

NOTES:
1. STEEL DECK SHALL COMPLY WITH LATEST REQUIREMENTS OF THE STEEL DECK INSTITUTE (SDI).
2. SUBMIT CURRENT CODE EVALUATION REPORT (ICC OR IAPMO) WITH LOAD AND LATERAL SHEAR CAPACITIES WITH SHOP DRAWINGS.
3. FIBER REINFORCEMENT, WHEN REQUIRED IN SCHEDULE, SHALL BE MACROSYNTHETIC FIBER REINFORCEMENT PER THE CONCRETE MATERIALS SECTION OF THE GENERAL STRUCTURAL NOTES.
4. ALL DECK SHALL BE 3-SPAN CONTINUOUS MINIMUM WHERE POSSIBLE. IN AREAS WHERE 3-SPAN CONDITIONS ARE NOT POSSIBLE THE CONTRACTOR SHALL VERIFY UN-SHORED DECK IS PERMITTED BY THE DECK MANUFACTURER FOR THE SPAN CONDITION, SPAN LENGTH, AND DECK GAUGE. WHERE DECK DOES NOT MEET THE REQUIREMENTS FOR UN-SHORED DECK, THE CONTRACTOR SHALL EITHER PROVIDE HEAVIER GAUGE DECK TO ALLOW FOR UN-SHORED DECK OR PROVIDE SHORING.
5. STEEL DECK WITHOUT CONCRETE FILL SHALL NOT BE USED TO SUPPORT LOADS FROM PLUMBING, HVAC DUCTS, LIGHT FIXTURES, ARCHITECTURAL ELEMENTS OR EQUIPMENT OF ANY KIND, UNLESS SPECIFICALLY NOTED OTHERWISE. LIGHTWEIGHT SUSPENDED ACOUSTICAL CEILINGS WITH A TOTAL WEIGHT PER WIRE NOT EXCEEDING 50# MAY BE HUNG FROM THE STEEL ROOF DECK. THE HANGERS SHOULD BE STAGGERED TO DISTRIBUTE THE LOAD OVER MULTIPLE DECK FLUTES.
6. DECK SHALL HAVE 2" MINIMUM BEARING ON ALL SUPPORTING MEMBERS (MEMBERS PERPENDICULAR TO DECK) UNO. DECKS SHALL HAVE 1.1/2" MINIMUM BEARING AT PARALLEL MEMBERS.
7. DO NOT EMBED CONDUITS OR PIPES IN CONCRETE FILL OVER STEEL DECKS WITHOUT APPROVAL OF STRUCTURAL ENGINEER.
8. SEE TYPICAL DETAILS FOR REINFORCEMENT REQUIRED AT OPENINGS THROUGH STEEL DECK. OPENING REINFORCING SHALL BE INSTALLED PRIOR TO SAW CUTTING OPENINGS.
9. PROVIDE GALVANIZED STEEL DECK ABOVE & BELOW MECHANICAL ROOMS.
10. SEE PLANS AND DETAILS FOR LOCATIONS WHERE ADDITIONAL SLAB REINFORCEMENT IS REQUIRED.

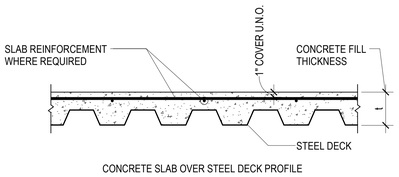

CONCRETE SLAB OVER STEEL DECK PROFILE

STEEL DECK ATTACHMENT SCHEDULE

MARK	WELDED			MECHANICAL		
	SUPPORTS	PARALLEL	SIDE LAP	SUPPORTS	PARALLEL	SIDE LAP
SDA-1	PW @ 36/7	PW @ 12" O.C.	1.1/2" TSW @ 18" O.C.	PAF @ 36/7	PAF @ 12" O.C.	PSC @ 12" O.C.
SDA-2	PW @ 32/5	PW @ 18" O.C.	1.1/2" TSW @ 18" O.C.	PAF @ 32/5	PAF @ 18" O.C.	PSC @ 18" O.C.

NOTES:
1. PW = PUDDLE WELD - 1/2" EFFECTIVE DIAMETER ARC SPOT WELD AT INTERIOR FLUTES, 1" X 3/8" EFFECTIVE ARC SEAM WELD AT SUPPORTS ADJACENT TO SIDELAP.
2. TSW = TOP SEAM WELD - 1.1/2" LONG TOP SEAM WELDS BETWEEN ADJACENT PIECES OF DECKING. CRIMP SIDE SEAMS BEFORE WELDING INTERLOCKING SEAMS.
3. BP = BUTTON PUNCH - 3/16" BUTTON PUNCH BETWEEN ADJACENT PIECES OF DECK. CRIMP SEAMS BEFORE BUTTON PUNCHING INTERLOCKING SEAMS.
4. PAF = POWDER ACTUATED FASTENER -
   HILTI X-HSN 24 AT SUPPORTS 3/16" THROUGH 3/8" THICK
   HILTI X-ENP-19 L15 AT SUPPORTS 1/4" THICK AND GREATER
   PNEUTEK SDK61075 AT SUPPORTS 0.113" THROUGH 0.155" THICK
   PNEUTEK SDK63075 AT SUPPORTS 0.155" THROUGH 0.250" THICK
   PNEUTEK K64062 AT SUPPORTS 0.187" THROUGH 0.312" THICK
   PNEUTEK K66062 OR K66075 AT SUPPORTS 0.281" THICK AND GREATER
5. SDS = SELF DRILLING SCREW. WHERE SIDELAPS HAVE SCREWED CONNECTION, THE DECK PROVIDED SHALL HAVE A SCREWABLE SIDE SEAM, UNO.
6. PSC = PROPRIETARY SIDELAP CONNECTION - VERCO SIDELAP CONNECTION 2 FOR VERCO PUNCHLOK II SYSTEM, ASC DELTA GRIP FOR ASC DECKS.
7. SPACING AT SUPPORTS IS NOTED AS (DECK PANEL WIDTH)/(ATTACHMENTS PER PANEL). FOR EXAMPLE: PW @ 36/4 INDICATES A 36" WIDE DECK SHEET WITH 4 PUDDLE WELDS AT EACH SUPPORT.
8. HEADED STUD ANCHORS WELDED THROUGH DECK WITH 1" MINIMUM COVER FROM EDGE OF DECK TO STUD CENTERLINE MAY BE SUBSTITUTED ONE FOR ONE FOR PW. ALIGN AND SECURE DECK IN POSITION BEFORE INSTALLING STUDS.
9. SEE PLANS AND SFRS SHEETS FOR ADDITIONAL FASTENERS REQUIRED AT MEMBERS DENOTED AS SFRS. OMIT ATTACHMENTS WHERE DENOTED AS PROTECTED ZONES IN SFRS.
10. ALL WELDED SURFACES SHALL BE DRY BEFORE WELDING DECK OR STUDS TO SUPPORTS.
11. ALIGN AND SECURE DECK IN POSITION BEFORE WELDING OR INSTALLING FASTENERS OR STUDS.
12. ALTERNATE MEANS OF DECK ATTACHMENT ARE PERMITTED WITH APPROVAL OF THE ENGINEER. THE CONTRACTOR SHALL SUBMIT THE PROPOSED ATTACHMENT SYSTEM AND THE CODE EVALUATION REPORT DEMONSTRATING THE SYSTEM HAS THE STRENGTH TO MEET THE SPECIFIED DECK SHEAR. IF THE ALTERNATE METHOD IS APPROVED, IT IS THE RESPONSIBILITY OF THE CONTRACTOR TO ENSURE THAT THE DECK TYPE AND PROFILE IS COMPATIBLE WITH THE FASTENING SYSTEM.

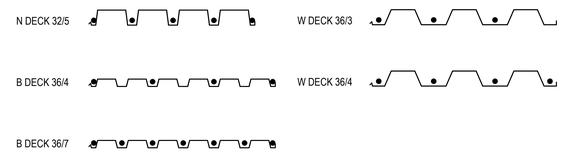

STEEL BASE PLATE SCHEDULE

BASE PLATE MARK	N	B	THICK-NESS	C	TYPE	REMARKS
SBP-1	--	--	3/4"	--	T3	
SBP-2	22"	22"	3/4"	--	T1	

NOTES:
1. BASE PLATES BEARING ON CONCRETE SHALL BE INSTALLED W/ 4-3/4"Ø ANCHOR RODS UNO. PROJECT ANCHOR RODS 3" (MIN.) ABOVE THE TOP OF THE BASE PLATE. ALL BOLTS SHALL BE INSTALLED W/ HARDENED WASHERS BENEATH THE NUT. ANY BOLT HOLES LARGER THAN THE BOLT DIAMETER PLUS 5/16" SHALL HAVE 5/16" PLATE WASHERS INSTALLED BENEATH THE HARDENED WASHERS.
2. BASE PLATES BEARING ON STEEL SHALL BE INSTALLED W/4-7/8"Ø A325 BOLTS, UNLESS NOTED OTHERWISE.
3. DO NOT WELD ANCHOR RODS

NEW BASE PLATE

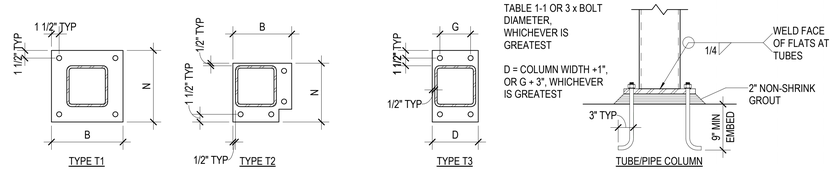

C1 / SF602 TYPICAL STEEL BASE PLATE SCHEDULE & DETAILS FOR GRAVITY COLUMNS

NO SCALE

MHTN ARCHITECTS
MHTN Architects, Inc.
280 South 400 West
Suite 250
Salt Lake City, Utah 84101
Telephone (801) 595-6700
www.mhtn.com

REAVELEY Engineers
515 East 100 South, Suite 1200
Salt Lake City, Utah 84102
801 486 3883
www.reaveley.com

JORDAN SCHOOL DISTRICT

JORDAN LEARNING CENTER
3706 WEST 9800 SOUTH
SOUTH JORDAN, UT 84095

©2023 MHTN ARCHITECTS, INC.
Confidentiality Notice:
This document is intended for use on the Project identified herein by individuals and companies involved in the design, permitting, bidding and construction of the Project. MHTN Architects, Inc. grants limited rights to distribute and reproduce this document for this express purpose only. Distribution, printing or copying this document for purposes other than those indicated is strictly prohibited. If a digital copy of this document is received in error, please delete it.

SEAL

PROFESSIONAL STRUCTURAL ENGINEER
No. 10369702-2202
JUSTIN D. NADAULD
STATE OF UTAH
08/29/24

MHTN PROJECT NO 2024528

Original drawing is 30 x 42. Do not scale contents of this drawing.

REVISIONS
CONTRACTOR TO VERIFY DRAWINGS IN FIELD USE REFLECT LAST REVISION DATE.

NO.△	DATE	DESCRIPTION

ISSUE
CONSTRUCTION DOCUMENTS 100%
08/29/24

SHEET NAME
STEEL DECK SCHEDULES

SHEET NUMBER
SF602

Autodesk Docs://2024528 JSD Retail Remodel/S24 2024528 JSD Retail Remodel.rvt
8/27/2024 7:13:03 PM

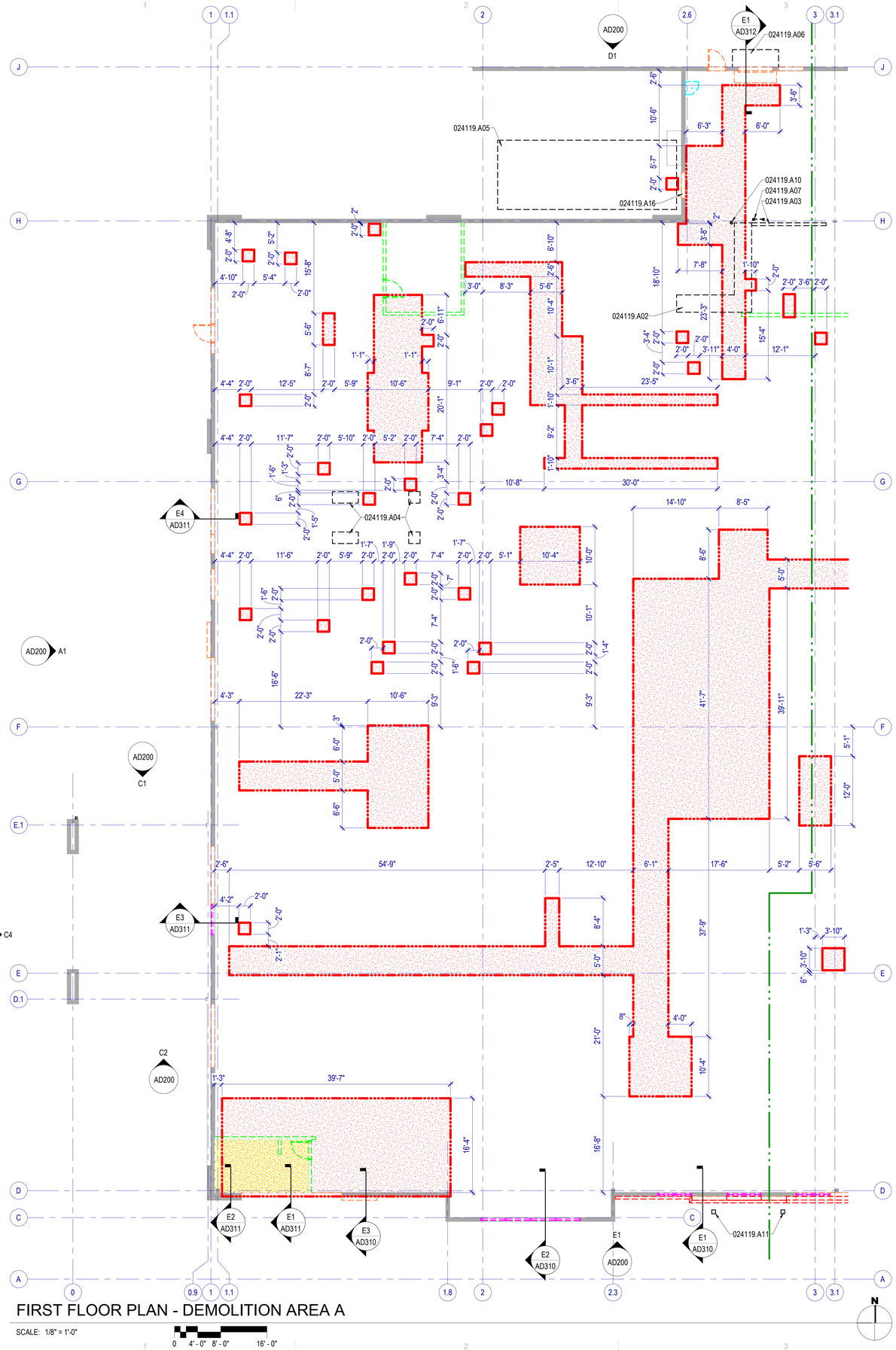

FIRST FLOOR PLAN - DEMOLITION AREA A

SCALE: 1/8" = 1'-0"

0 4' - 0" 8' - 0" 16' - 0"

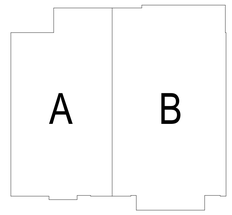

KEY PLAN

DEMOLITION GENERAL NOTES

Existing Conditions: Verify existing site and building conditions including but not limited to underground utilities and service lines, irrigation lines, sub-surface structures and all other existing construction both above and below grade.

Protection: Protect existing construction to remain from damage during demolition and new construction work. Repair any damage resulting from this work.

Protect in-place, existing mechanical, plumbing and electrical systems above ceilings that are not shown to be removed. This includes, but is not limited to: network cabling, coax cabling, conduits, piping, ductwork, etc.

When removing concrete slabs on grade, take all necessary precautions to protect electrical lines in or under those slabs.

Site Access: Coordinate phased access to the site with the Owner, including times of restricted access.

Coordination: Coordinate extent of walls to be removed with architectural floor plan(s).

Masonry Walls: Where masonry walls are demolished, clean and repair newly exposed surfaces to match adjacent wall finish.

Salvage: Review with the owner, casework, furniture, equipment and wall mounted display surfaces left behind after owner move out, that are not shown on drawings. Identify as either salvage or to be disposed of by contractor.

Verify that existing equipment that is to remain, to be salvaged or to be re-installed, is in working condition. Provide written documentation to the Owner for any items that are not in working condition before beginning work in the area.

LEGEND - DEMOLITION

- AREA OF NO WORK
- EXISTING ITEM TO REMAIN
- EXISTING WALL TO REMAIN
- EXISTING DOOR TO REMAIN
- EXISTING WINDOW TO REMAIN
- EXISTING MOP SINK
- EXISTING SLAB AND FLOOR FINISH TO REMAIN
- EXISTING TILE FLOORING TO BE DEMOLISHED
- AREA OF SLAB ON GRADE TO BE DEMOLISHED, COORDINATE WITH ELECTRICAL AND PLUMBING PLANS WHERE PLUMBING AND ELECTRICAL CONNECTIONS ARE REQUIRED
- AREA OF ROOF ASSEMBLY AND METAL DECK TO BE DEMOLISHED, COORDINATE OPENING LOCATIONS AND SIZES WITH A120
- EXISTING RTU SUPPORTS TO BE DEMOLISHED, RE: E5/AD120
- MASONRY WALLS OR PORTION THERE OF TO BE DEMOLISHED
- METAL STUD WALL WITH GYSUM BOARD ASSEMBLY TO BE DEMOLISHED
- METAL STUD WALL WITH EIFS ASSEMBLY TO BE DEMOLISHED
- REMOVE DOOR & FRAME
- REMOVE OVERHEAD DOOR & ACCESSORIES
- EXISTING GLAZING SYSTEM TO BE DEMOLISHED
- EXISTING CONCRETE CURB & BOLLARDS TO BE DEMOLISHED
- EXISTING PLUMBING FIXTURE TO BE DEMOLISHED
- EXISTING ITEMS TO BE DEMOLISHED, SEE KEYNOTES

NOTE: WHERE WALLS AND OTHER ITEMS ARE SHOWN WITH DASHED LINES, WHETHER KEYNOTED OR NOT, REMOVE THESE ITEMS TO THE EXTENT INDICATED AND AS REQUIRED BY NEW CONSTRUCTION.

KEYNOTES

024119.A02	DEMOLISH CONCRETE HOUSEKEEPING PAD
024119.A03	DEMOLISH CONCRETE CURB
024119.A04	REFRIGERATION PIT - SEE DETAIL E5/AD101A
024119.A05	DEMOLISH TRASH COMPACTOR
024119.A06	DEMOLISH METAL AWNING
024119.A07	DEMOLISH EXISTING ROOF LADDER
024119.A10	DEMOLISH EXISTING BOLLARD
024119.A11	DEMOLISH EXISTING CANOPY AND SUPPORTS
024119.A16	DEMOLISH TRASH COMPACTOR DOOR

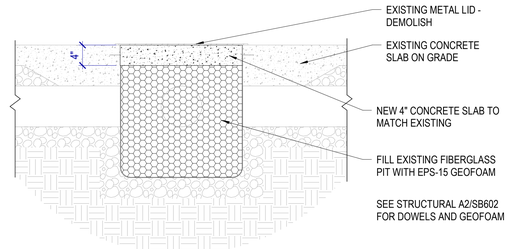

E5 EXISTING REFRIGERATION PITS INFILL

SCALE: 1" = 1'-0"

MHTN ARCHITECTS
MHTN Architects, Inc.
280 South 400 West
Suite 250
Salt Lake City, Utah 84101
Telephone (801) 595-6700
www.mhtn.com

JORDAN SCHOOL DISTRICT

JORDAN LEARNING CENTER

3706 WEST 9800 SOUTH
SOUTH JORDAN, UT 84009

©2023 MHTN ARCHITECTS, INC.
Confidentiality Notice
This document is intended for use on the Project identified herein by individuals and companies involved in the design, permitting, bidding and construction of the Project. MHTN Architects, Inc. grants limited rights to distribute and reproduce this document for this express purpose only. Distribution, printing or copying this document for purposes other than those indicated is strictly prohibited. If a digital copy of this document is received in error, please delete it.

SEAL

STATE OF UTAH
CLIFFORD HOWARD CURTIS
No. 7394786-0301
AUGUST 29, 2024
LICENSED ARCHITECT

MHTN PROJECT NO. 2024528

Original drawing is 30 x 42. Do not scale contents of this drawing.

REVISIONS
CONTRACTOR TO VERIFY DRAWINGS IN FIELD. USE REFLECT LAST REVISION DATE.

NO.	DATE	DESCRIPTION

ISSUE
CONSTRUCTION DOCUMENTS
AUGUST 29, 2024

SHEET NAME
DEMOLITION PLAN - AREA A

SHEET NUMBER
AD101A

Autodesk Docs://2024528 JSD Retail Remodel/A24 2024528 JSD Retail Remodel.rvt
8/28/2024 7:49:48 AM

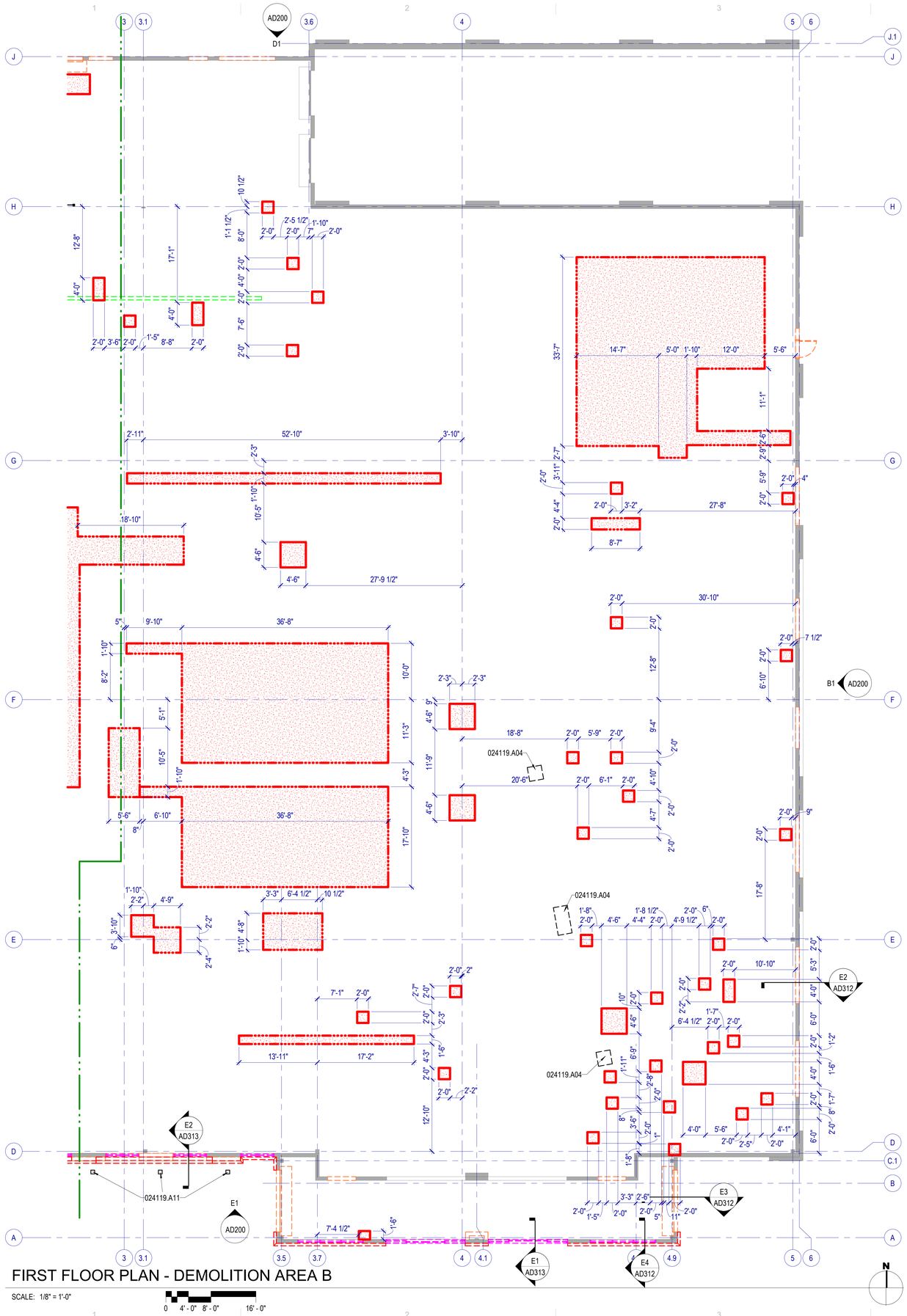

FIRST FLOOR PLAN - DEMOLITION AREA B

SCALE: 1/8" = 1'-0"

0 4' - 0" 8' - 0" 16' - 0"

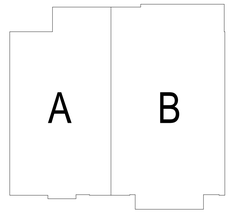

KEY PLAN

DEMOLITION GENERAL NOTES

Existing Conditions: Verify existing site and building conditions including but not limited to underground utilities and service lines, irrigation lines, sub-surface structures and all other existing construction both above and below grade.

Protection: Protect existing construction to remain from damage during demolition and new construction work. Repair any damage resulting from this work.

Protect in-place, existing mechanical, plumbing and electrical systems above ceilings that are not shown to be removed. This includes, but is not limited to: network cabling, coax cabling, conduits, piping, ductwork, etc.

When removing concrete slabs on grade, take all necessary precautions to protect electrical lines in or under those slabs.

Site Access: Coordinate phased access to the site with the Owner, including times of restricted access.

Coordination: Coordinate extent of walls to be removed with architectural floor plan(s).

Masonry Walls: Where masonry walls are demolished, clean and repair newly exposed surfaces to match adjacent wall finish.

Salvage: Review with the owner, casework, furniture, equipment and wall mounted display surfaces left behind after owner move out, that are not shown on drawings. Identify as either salvage or to be disposed of by contractor.

Verify that existing equipment that is to remain, to be salvaged or to be re-installed, is in working condition. Provide written documentation to the Owner for any items that are not in working condition before beginning work in the area.

LEGEND - DEMOLITION

- AREA OF NO WORK
- EXISTING ITEM TO REMAIN
- EXISTING WALL TO REMAIN
- EXISTING DOOR TO REMAIN
- EXISTING WINDOW TO REMAIN
- EXISTING MOP SINK
- EXISTING SLAB AND FLOOR FINISH TO REMAIN
- EXISTING TILE FLOORING TO BE DEMOLISHED
- AREA OF SLAB ON GRADE TO BE DEMOLISHED, COORDINATE WITH ELECTRICAL AND PLUMBING PLANS WHERE PLUMBING AND ELECTRICAL CONNECTIONS ARE REQUIRED
- AREA OF ROOF ASSEMBLY AND METAL DECK TO BE DEMOLISHED, COORDINATE OPENING LOCATIONS AND SIZES WITH A120
- EXISTING RTU SUPPORTS TO BE DEMOLISHED, RE: E5/AD120
- MASONRY WALLS OR PORTION THERE OF TO BE DEMOLISHED
- METAL STUD WALL WITH GYSUM BOARD ASSEMBLY TO BE DEMOLISHED
- METAL STUD WALL WITH EIFS ASSEMBLY TO BE DEMOLISHED
- REMOVE DOOR & FRAME
- REMOVE OVERHEAD DOOR & ACCESSORIES
- EXISTING GLAZING SYSTEM TO BE DEMOLISHED
- EXISTING CONCRETE CURB & BOLLARDS TO BE DEMOLISHED
- EXISTING PLUMBING FIXTURE TO BE DEMOLISHED
- EXISTING ITEMS TO BE DEMOLISHED, SEE KEYNOTES

NOTE: WHERE WALLS AND OTHER ITEMS ARE SHOWN WITH DASHED LINES, WHETHER KEYNOTED OR NOT, REMOVE THESE ITEMS TO THE EXTENT INDICATED AND AS REQUIRED BY NEW CONSTRUCTION.

KEYNOTES

024119.A04	REFRIGERATION PIT - SEE DETAIL E5/AD101A
024119.A11	DEMOLISH EXISTING CANOPY AND SUPPORTS

MHTN ARCHITECTS

MHTN Architects, Inc.
280 South 400 West
Suite 250
Salt Lake City, Utah 84101
Telephone (801) 595-6700
www.mhtn.com

JORDAN SCHOOL DISTRICT

JORDAN LEARNING CENTER

3706 WEST 9800 SOUTH
SOUTH JORDAN, UT 84009

©2023 MHTN ARCHITECTS, INC.

Confidentiality Notice:
This document is intended for use on the Project identified herein by individuals and companies involved in the design, permitting, bidding and construction of the Project. MHTN Architects, Inc. grants limited rights to distribute and reproduce this document for this express purpose only. Distribution, printing or copying this document for purposes other than those indicated is strictly prohibited. If a digital copy of this document is received in error, please delete it.

SEAL

STATE OF UTAH
CLIFFORD HOWARD CURTIS
No. 7394786-0301
3/8 AUGUST 2024
LICENSED ARCHITECT

MHTN PROJECT NO. 2024528

Original drawing is 30 x 42. Do not scale contents of this drawing.

REVISIONS
CONTRACTOR TO VERIFY DRAWINGS IN FIELD USE REFLECT LAST REVISION DATE.

NO.△	DATE	DESCRIPTION

ISSUE
CONSTRUCTION DOCUMENTS
AUGUST 29, 2024

SHEET NAME
DEMOLITION PLAN - AREA B

SHEET NUMBER
AD101B

Autodesk Docs://2024528 JSD Retail Remodel/A24 2024528 JSD Retail Remodel.rvt
8/28/2024 7:49:50 AM

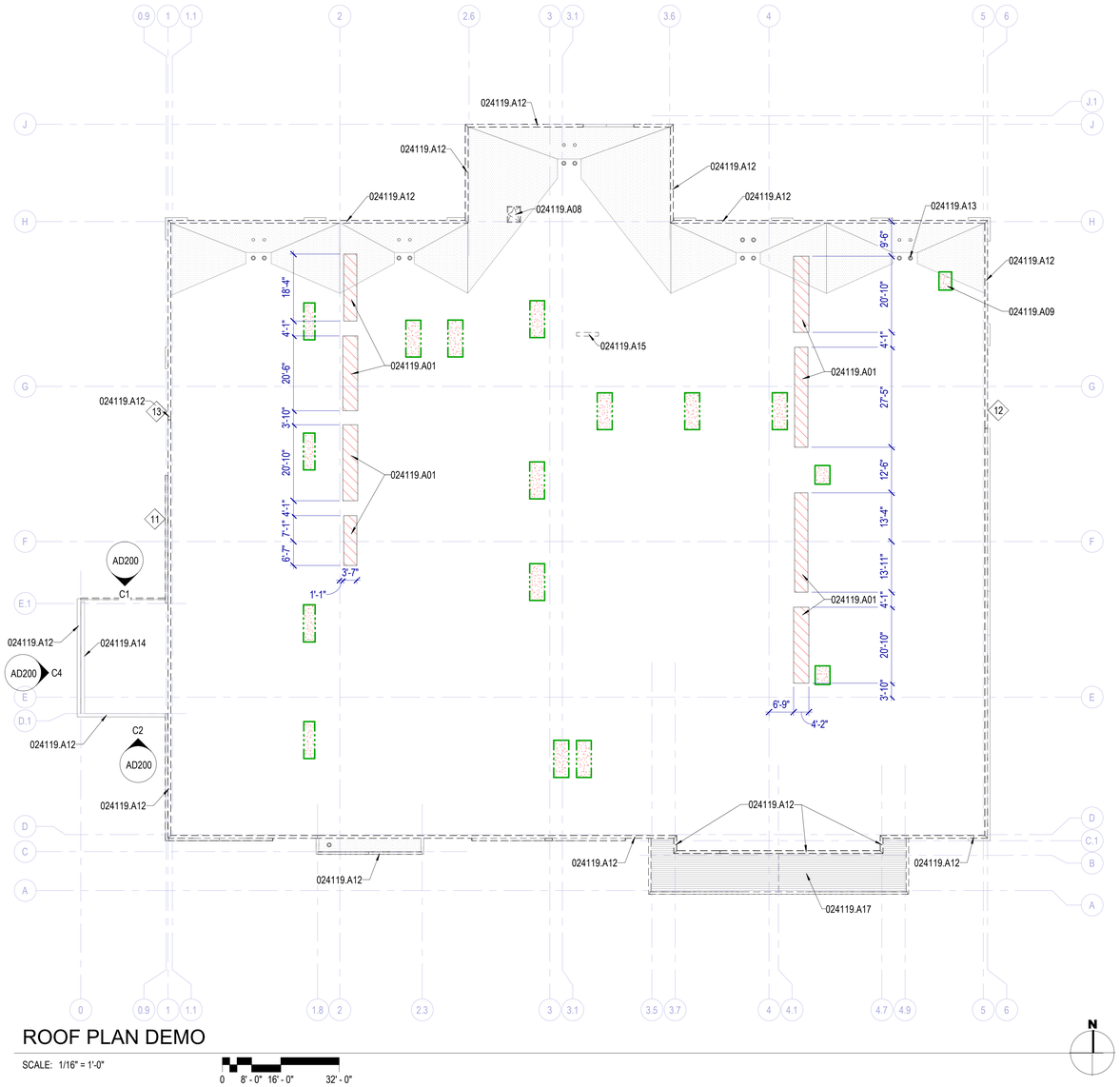

ROOF PLAN DEMO

SCALE: 1/16" = 1'-0"

0 8' - 0" 16' - 0" 32' - 0"

DEMOLITION GENERAL NOTES

Existing Conditions: Verify existing site and building conditions including but not limited to underground utilities and service lines, irrigation lines, sub-surface structures and all other existing construction both above and below grade.

Protection: Protect existing construction to remain from damage during demolition and new construction work. Repair any damage resulting from this work.

Protect in-place, existing mechanical, plumbing and electrical systems above ceilings that are not shown to be removed. This includes, but is not limited to: network cabling, coax cabling, conduits, piping, ductwork, etc.

When removing concrete slabs on grade, take all necessary precautions to protect electrical lines in or under those slabs.

Site Access: Coordinate phased access to the site with the Owner, including times of restricted access.

Coordination: Coordinate extent of walls to be removed with architectural floor plan(s).

Masonry Walls: Where masonry walls are demolished, clean and repair newly exposed surfaces to match adjacent wall finish.

Salvage: Review with the owner, casework, furniture, equipment and wall mounted display surfaces left behind after owner move out, that are not shown on drawings. Identify as either salvage or to be disposed of by contractor.

Verify that existing equipment that is to remain, to be salvaged or to be re-installed, is in working condition. Provide written documentation to the Owner for any items that are not in working condition before beginning work in the area.

LEGEND - DEMOLITION

- AREA OF NO WORK
- EXISTING ITEM TO REMAIN
- EXISTING WALL TO REMAIN
- EXISTING DOOR TO REMAIN
- EXISTING WINDOW TO REMAIN
- EXISTING MOP SINK
- EXISTING SLAB AND FLOOR FINISH TO REMAIN
- EXISTING TILE FLOORING TO BE DEMOLISHED
- AREA OF SLAB ON GRADE TO BE DEMOLISHED, COORDINATE WITH ELECTRICAL AND PLUMBING PLANS WHERE PLUMBING AND ELECTRICAL CONNECTIONS ARE REQUIRED
- AREA OF ROOF ASSEMBLY AND METAL DECK TO BE DEMOLISHED, COORDINATE OPENING LOCATIONS AND SIZES WITH A120
- EXISTING RTU SUPPORTS TO BE DEMOLISHED, RE: E5/AD120
- MASONRY WALLS OR PORTION THERE OF TO BE DEMOLISHED
- METAL STUD WALL WITH GYSUM BOARD ASSEMBLY TO BE DEMOLISHED
- METAL STUD WALL WITH EIFS ASSEMBLY TO BE DEMOLISHED
- REMOVE DOOR & FRAME
- REMOVE OVERHEAD DOOR & ACCESSORIES
- EXISTING GLAZING SYSTEM TO BE DEMOLISHED
- EXISTING CONCRETE CURB & BOLLARDS TO BE DEMOLISHED
- EXISTING PLUMBING FIXTURE TO BE DEMOLISHED
- EXISTING ITEMS TO BE DEMOLISHED, SEE KEYNOTES

NOTE: WHERE WALLS AND OTHER ITEMS ARE SHOWN WITH DASHED LINES, WHETHER KEYNOTED OR NOT, REMOVE THESE ITEMS TO THE EXTENT INDICATED AND AS REQUIRED BY NEW CONSTRUCTION.

KEYNOTES

024119.A01	EXISTING RTU SUPPORTS - CUT SUPPORTS AT DECK, PATCH AND REPAIR ROOF ASSEMBLY, RE: E5/AD120
024119.A08	DEMOLISH EXISTING ROOF ACCESS HATCH - PATCH AND REPAIR EXISTING ROOF ASSEMBLY
024119.A09	DEMOLISH EXISTING ROOF ASSEMBLY IN THIS AREA FOR NEW ROOF HATCH
024119.A12	REMOVE EXISTING COPING FROM PARAPETS, TYP
024119.A13	DEMOLISH PLASTIC GRATING COVER OF ROOF DRAINS, TYP
024119.A14	REMOVE EXISTING UNISTRUT ATTACHED TO WALL
024119.A15	DEMOLISH EXISTING SATELLITE DISH
024119.A17	DEMOLISH EXISTING STANDING SEAM METAL ROOF

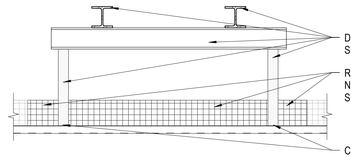

E5 EXISTING RTU SUPPORT STRUCTURE

SCALE: 1" = 1'-0"

MHTN ARCHITECTS
MHTN Architects, Inc.
280 South 400 West
Suite 250
Salt Lake City, Utah 84101
Telephone (801) 595-6700
www.mhtn.com

JORDAN SCHOOL DISTRICT

JORDAN LEARNING CENTER

3706 WEST 9800 SOUTH
SOUTH JORDAN, UT 84009

©2023 MHTN ARCHITECTS, INC.

Confidentiality Notice
This document is intended for use on the Project identified herein by individuals and companies involved in the design, permitting, bidding and construction of the Project. MHTN Architects, Inc. grants limited rights to distribute and reproduce this document for this express purpose only. Distribution, printing or copying this document for purposes other than those indicated is strictly prohibited. If a digital copy of this document is received in error, please delete it.

SEAL

STATE OF UTAH
CLIFFORD HOWARD CURTIS
No. 7394786-0301
2/8 AUGUST 2024
LICENSED ARCHITECT

MHTN PROJECT NO. 2024528

Original drawing is 30 x 42. Do not scale contents of this drawing.

REVISIONS
CONTRACTOR TO VERIFY DRAWINGS IN FIELD. USE REFLECT LAST REVISION DATE.

NO.	DATE	DESCRIPTION

ISSUE
CONSTRUCTION DOCUMENTS
AUGUST 29, 2024

SHEET NAME
DEMOLITION ROOF PLAN

SHEET NUMBER
AD120

Autodesk Docs://2024528 JSD Retail Remodel/A24 2024528 JSD Retail Remodel.rvt
8/28/2024 7:49:53 AM

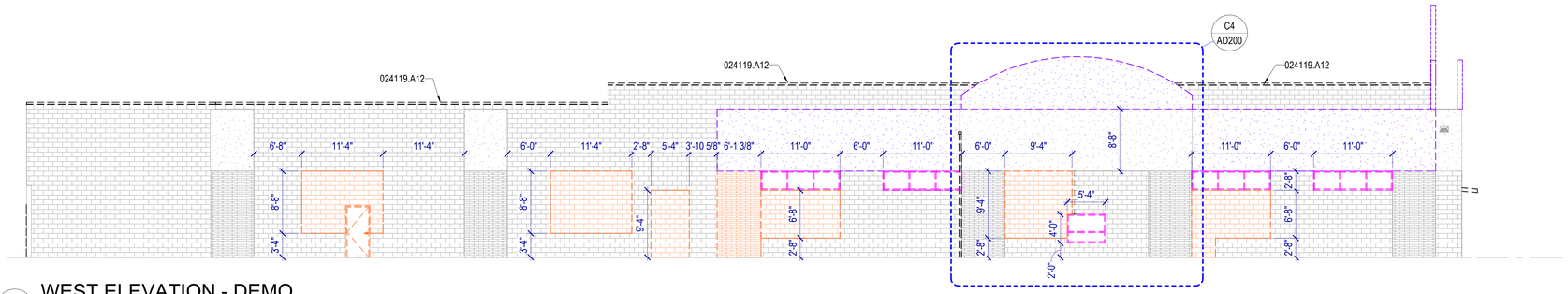

A1 WEST ELEVATION - DEMO

SCALE: 1/8" = 1'-0"

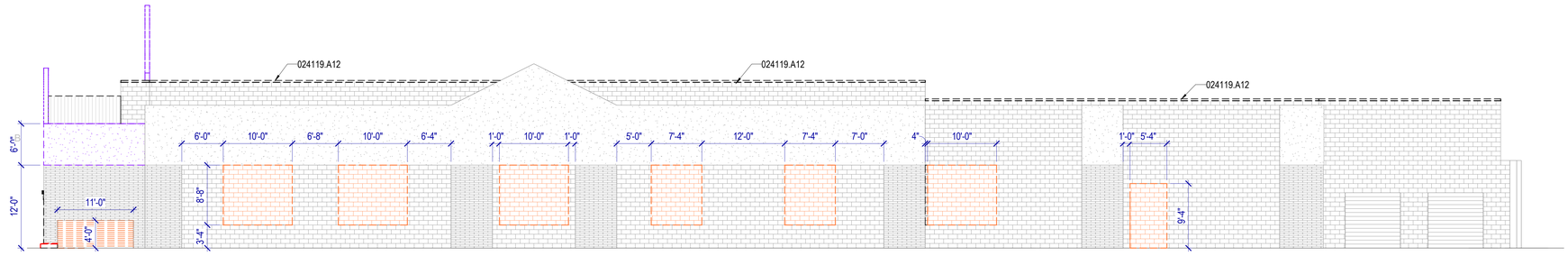

B1 EAST ELEVATION - DEMO

SCALE: 1/8" = 1'-0"

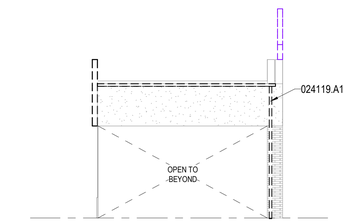

C1 DRIVE THRU NORTH ELEVATION - DEMO

SCALE: 1/8" = 1'-0"

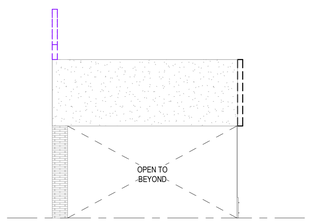

C2 DRIVE THRU SOUTH ELEVATION - DEMO

SCALE: 1/8" = 1'-0"

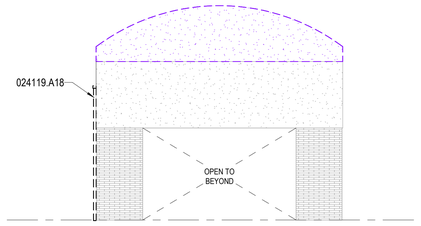

C4 DRIVE THRU WEST ELEVATION - DEMO

SCALE: 1/8" = 1'-0"

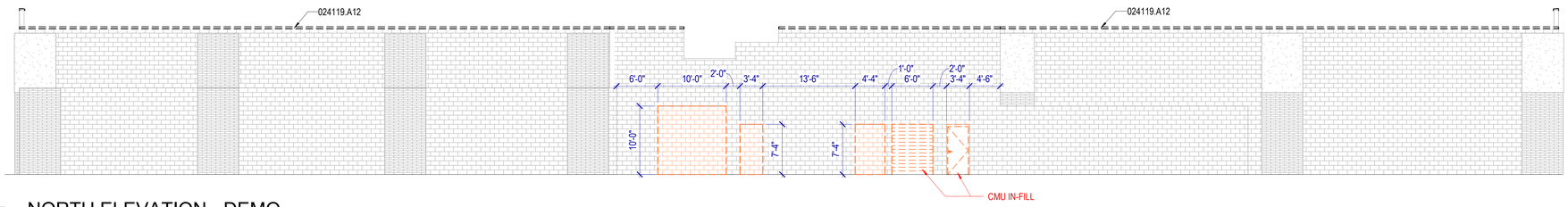

D1 NORTH ELEVATION - DEMO

SCALE: 1/8" = 1'-0"

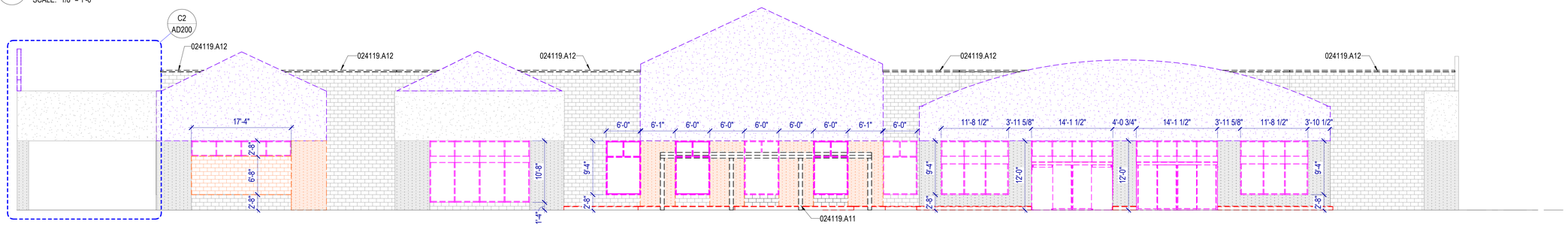

E1 SOUTH ELEVATION - DEMO

SCALE: 1/8" = 1'-0"

DEMOLITION GENERAL NOTES

Existing Conditions: Verify existing site and building conditions including but not limited to underground utilities and service lines, irrigation lines, sub-surface structures and all other existing construction both above and below grade.

Protection: Protect existing construction to remain from damage during demolition and new construction work. Repair any damage resulting from this work.

Protect in-place, existing mechanical, plumbing and electrical systems above ceilings that are not shown to be removed. This includes, but is not limited to: network cabling, coax cabling, conduits, piping, ductwork, etc.

When removing concrete slabs on grade, take all necessary precautions to protect electrical lines in or under those slabs.

Site Access: Coordinate phased access to the site with the Owner, including times of restricted access.

Coordination: Coordinate extent of walls to be removed with architectural floor plan(s).

Masonry Walls: Where masonry walls are demolished, clean and repair newly exposed surfaces to match adjacent wall finish.

Salvage: Review with the owner, casework, furniture, equipment and wall mounted display surfaces left behind after owner move out, that are not shown on drawings. Identify as either salvage or to be disposed of by contractor.

Verify that existing equipment that is to remain, to be salvaged or to be re-installed, is in working condition. Provide written documentation to the Owner for any items that are not in working condition before beginning work in the area.

LEGEND - DEMOLITION

- AREA OF NO WORK
- EXISTING ITEM TO REMAIN
- EXISTING WALL TO REMAIN
- EXISTING DOOR TO REMAIN
- EXISTING WINDOW TO REMAIN
- EXISTING MOP SINK
- EXISTING SLAB AND FLOOR FINISH TO REMAIN
- EXISTING TILE FLOORING TO BE DEMOLISHED
- AREA OF SLAB ON GRADE TO BE DEMOLISHED, COORDINATE WITH ELECTRICAL AND PLUMBING PLANS WHERE PLUMBING AND ELECTRICAL CONNECTIONS ARE REQUIRED
- AREA OF ROOF ASSEMBLY AND METAL DECK TO BE DEMOLISHED, COORDINATE OPENING LOCATIONS AND SIZES WITH A120
- EXISTING RTU SUPPORTS TO BE DEMOLISHED, RE: E5/AD120
- MASONRY WALLS OR PORTION THERE OF TO BE DEMOLISHED
- METAL STUD WALL WITH GYSUM BOARD ASSEMBLY TO BE DEMOLISHED
- METAL STUD WALL WITH EIFS ASSEMBLY TO BE DEMOLISHED
- REMOVE DOOR & FRAME
- REMOVE OVERHEAD DOOR & ACCESSORIES
- EXISTING GLAZING SYSTEM TO BE DEMOLISHED
- EXISTING CONCRETE CURB & BOLLARDS TO BE DEMOLISHED
- EXISTING PLUMBING FIXTURE TO BE DEMOLISHED
- EXISTING ITEMS TO BE DEMOLISHED, SEE KEYNOTES

NOTE: WHERE WALLS AND OTHER ITEMS ARE SHOWN WITH DASHED LINES, WHETHER KEYNOTED OR NOT, REMOVE THESE ITEMS TO THE EXTENT INDICATED AND AS REQUIRED BY NEW CONSTRUCTION.

KEYNOTES

024119.A11	DEMOLISH EXISTING CANOPY AND SUPPORTS
024119.A12	REMOVE EXISTING COPING FROM PARAPETS, TYP
024119.A18	DEMOLISH GUTTER AND DOWNSPOUT

MHTN ARCHITECTS
MHTN Architects, Inc.
280 South 400 West
Suite 250
Salt Lake City, Utah 84101
Telephone (801) 595-6700
www.mhtn.com

JORDAN SCHOOL DISTRICT

JORDAN LEARNING CENTER

3706 WEST 9800 SOUTH
SOUTH JORDAN, UT 84009

©2023 MHTN ARCHITECTS, INC.
Confidentiality Notice:
This document is intended for use on the Project identified herein by individuals and companies involved in the design, permitting, bidding and construction of the Project. MHTN Architects, Inc. grants limited rights to distribute and reproduce this document for this express purpose only. Distribution, printing or copying this document for purposes other than those indicated is strictly prohibited. If a digital copy of this document is received in error, please delete it.

SEAL

MHTN PROJECT NO. 2024528

VIEW AND PRINT THIS DRAWING IN COLOR

Original drawing is 30 x 42. Do not scale contents of this drawing.

REVISIONS
CONTRACTOR TO VERIFY DRAWINGS IN FIELD USE REFLECT LAST REVISION DATE.

NO.	DATE	DESCRIPTION

ISSUE
CONSTRUCTION DOCUMENTS
AUGUST 29, 2024

SHEET NAME
DEMOLITION - EXTERIOR ELEVATIONS

SHEET NUMBER
AD200

Autodesk Docs://2024528 JSD Retail Remodel/A24 2024528 JSD Retail Remodel.rvt
8/28/2024 7:49:57 AM

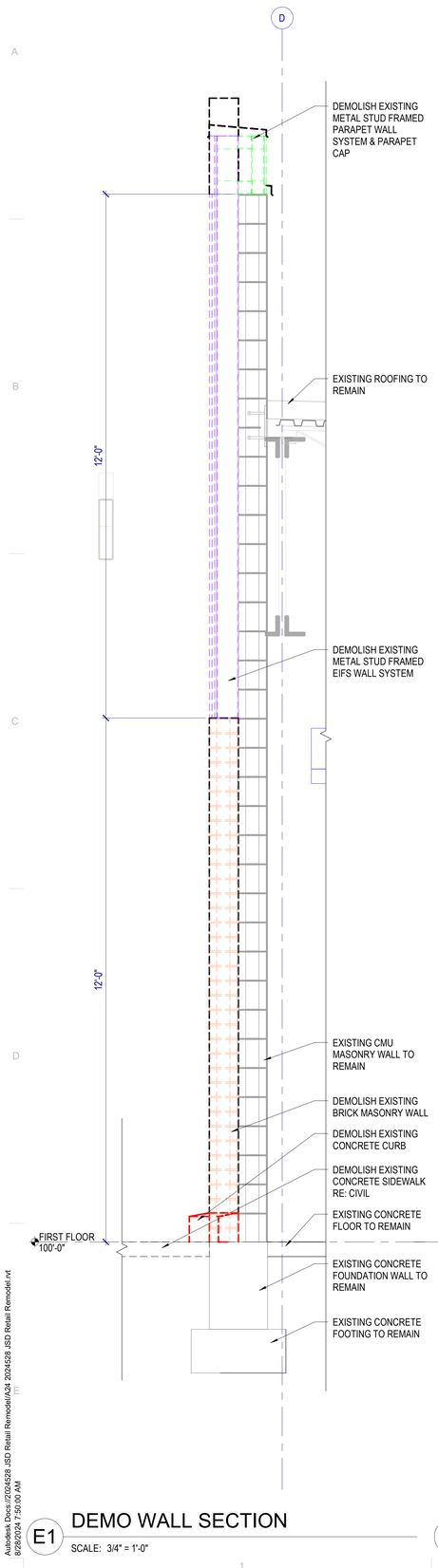

E1 DEMO WALL SECTION

SCALE: 3/4" = 1'-0"

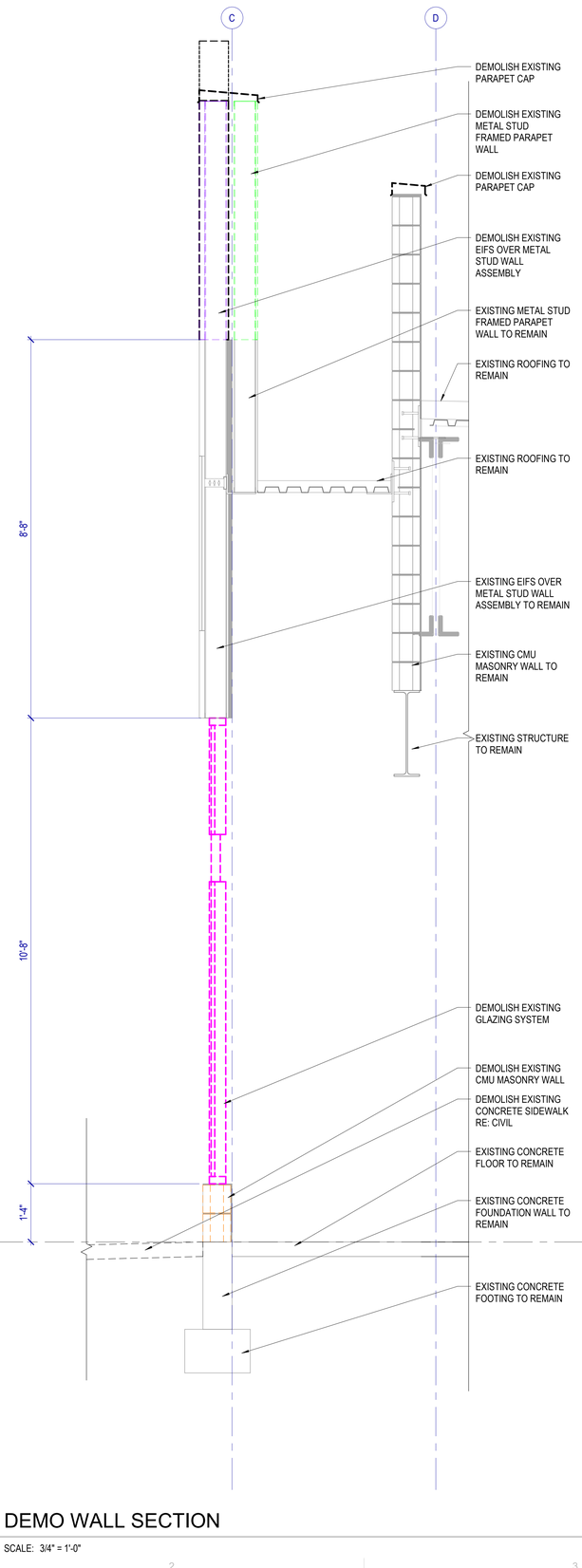

E2 DEMO WALL SECTION

SCALE: 3/4" = 1'-0"

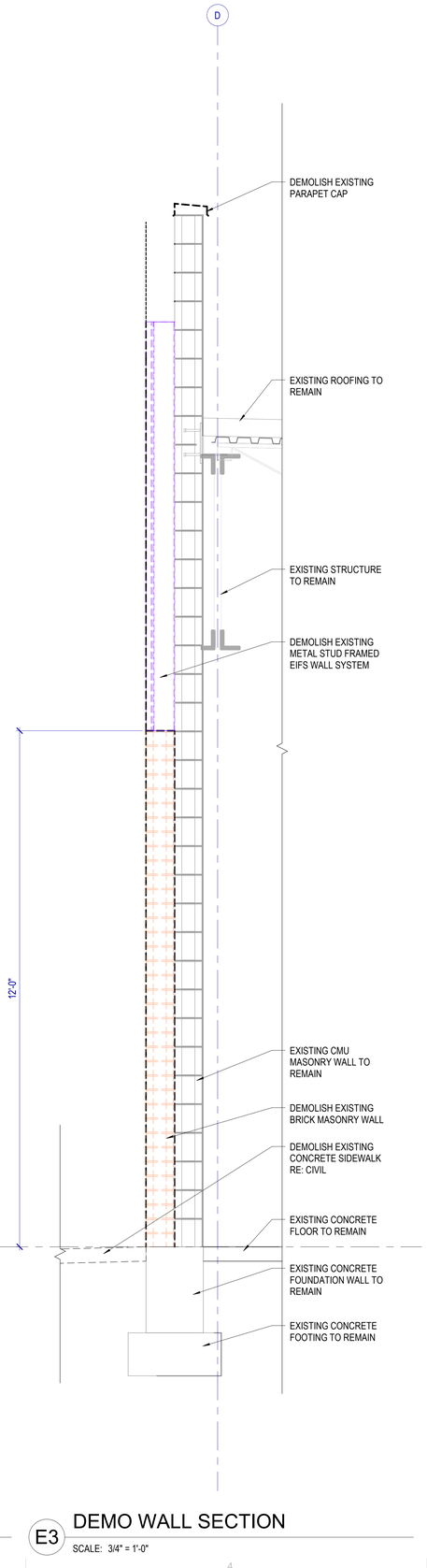

E3 DEMO WALL SECTION

SCALE: 3/4" = 1'-0"

DEMOLITION GENERAL NOTES

Existing Conditions: Verify existing site and building conditions including but not limited to underground utilities and service lines, irrigation lines, sub-surface structures and all other existing construction both above and below grade.

Protection: Protect existing construction to remain from damage during demolition and new construction work. Repair any damage resulting from this work.

Protect in-place, existing mechanical, plumbing and electrical systems above ceilings that are not shown to be removed. This includes, but is not limited to: network cabling, coax cabling, conduits, piping, ductwork, etc.

When removing concrete slabs on grade, take all necessary precautions to protect electrical lines in or under those slabs.

Site Access: Coordinate phased access to the site with the Owner, including times of restricted access.

Coordination: Coordinate extent of walls to be removed with architectural floor plan(s).

Masonry Walls: Where masonry walls are demolished, clean and repair newly exposed surfaces to match adjacent wall finish.

Salvage: Review with the owner, casework, furniture, equipment and wall mounted display surfaces left behind after owner move out, that are not shown on drawings. Identify as either salvage or to be disposed of by contractor.

Verify that existing equipment that is to remain, to be salvaged or to be re-installed, is in working condition. Provide written documentation to the Owner for any items that are not in working condition before beginning work in the area.

LEGEND - DEMOLITION

- AREA OF NO WORK
- EXISTING ITEM TO REMAIN
- EXISTING WALL TO REMAIN
- EXISTING DOOR TO REMAIN
- EXISTING WINDOW TO REMAIN
- EXISTING MOP SINK
- EXISTING SLAB AND FLOOR FINISH TO REMAIN
- EXISTING TILE FLOORING TO BE DEMOLISHED
- AREA OF SLAB ON GRADE TO BE DEMOLISHED, COORDINATE WITH ELECTRICAL AND PLUMBING PLANS WHERE PLUMBING AND ELECTRICAL CONNECTIONS ARE REQUIRED
- AREA OF ROOF ASSEMBLY AND METAL DECK TO BE DEMOLISHED, COORDINATE OPENING LOCATIONS AND SIZES WITH A120
- EXISTING RTU SUPPORTS TO BE DEMOLISHED, RE: E5/AD120
- MASONRY WALLS OR PORTION THERE OF TO BE DEMOLISHED
- METAL STUD WALL WITH GYSUM BOARD ASSEMBLY TO BE DEMOLISHED
- METAL STUD WALL WITH EIFS ASSEMBLY TO BE DEMOLISHED
- REMOVE DOOR & FRAME
- REMOVE OVERHEAD DOOR & ACCESSORIES
- EXISTING GLAZING SYSTEM TO BE DEMOLISHED
- EXISTING CONCRETE CURB & BOLLARDS TO BE DEMOLISHED
- EXISTING PLUMBING FIXTURE TO BE DEMOLISHED
- EXISTING ITEMS TO BE DEMOLISHED, SEE KEYNOTES

NOTE: WHERE WALLS AND OTHER ITEMS ARE SHOWN WITH DASHED LINES, WHETHER KEYNOTED OR NOT, REMOVE THESE ITEMS TO THE EXTENT INDICATED AND AS REQUIRED BY NEW CONSTRUCTION.

MHTN ARCHITECTS

MHTN Architects, Inc.
280 South 400 West
Suite 250
Salt Lake City, Utah 84101
Telephone (801) 595-6700
www.mhtn.com

JORDAN SCHOOL DISTRICT

JORDAN LEARNING CENTER

3706 WEST 9800 SOUTH
SOUTH JORDAN, UT 84009

©2023 MHTN ARCHITECTS, INC.

Confidentiality Notice:
This document is intended for use on the Project identified herein by individuals and companies involved in the design, permitting, bidding and construction of the Project. MHTN Architects, Inc. grants limited rights to distribute and reproduce this document for this express purpose only. Distribution, printing or copying this document for purposes other than those indicated is strictly prohibited. If a digital copy of this document is received in error, please delete it.

SEAL

MHTN PROJECT NO. 2024528

VIEW AND PRINT THIS DRAWING IN COLOR

Original drawing is 30 x 42. Do not scale contents of this drawing.

REVISIONS
CONTRACTOR TO VERIFY DRAWINGS IN FIELD USE REFLECT LAST REVISION DATE.

NO.	DATE	DESCRIPTION

ISSUE
CONSTRUCTION DOCUMENTS
AUGUST 29, 2024

SHEET NAME
DEMOLITION WALL SECTIONS

SHEET NUMBER
AD310

Autodesk Docs://2024528 JSD Retail Remodel/A24 2024528 JSD Retail Remodel.rvt
8/28/2024 7:50:00 AM

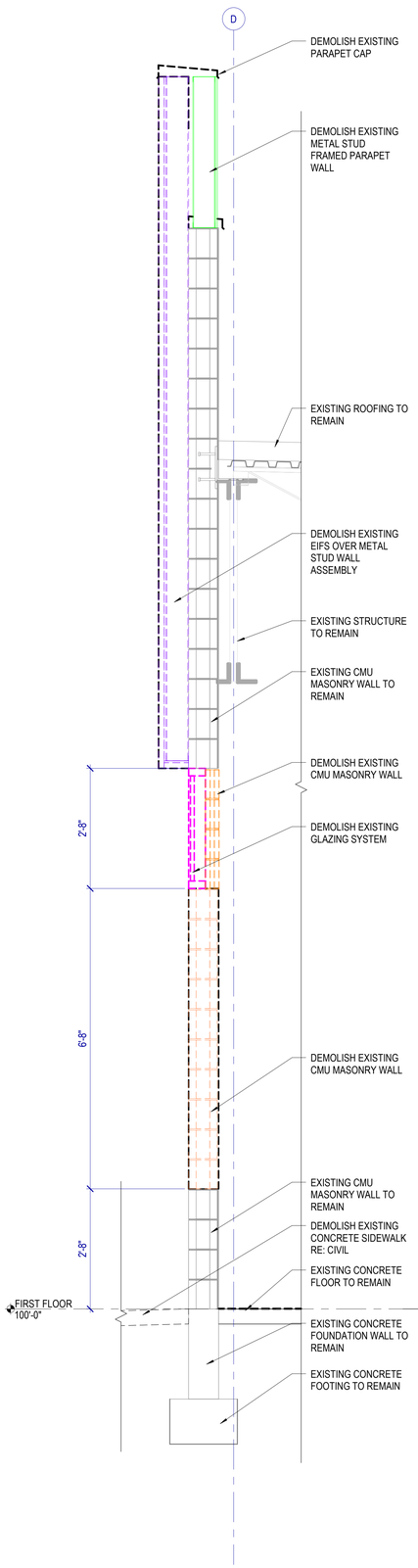

E1 DEMO WALL SECTION

SCALE: 3/4" = 1'-0"

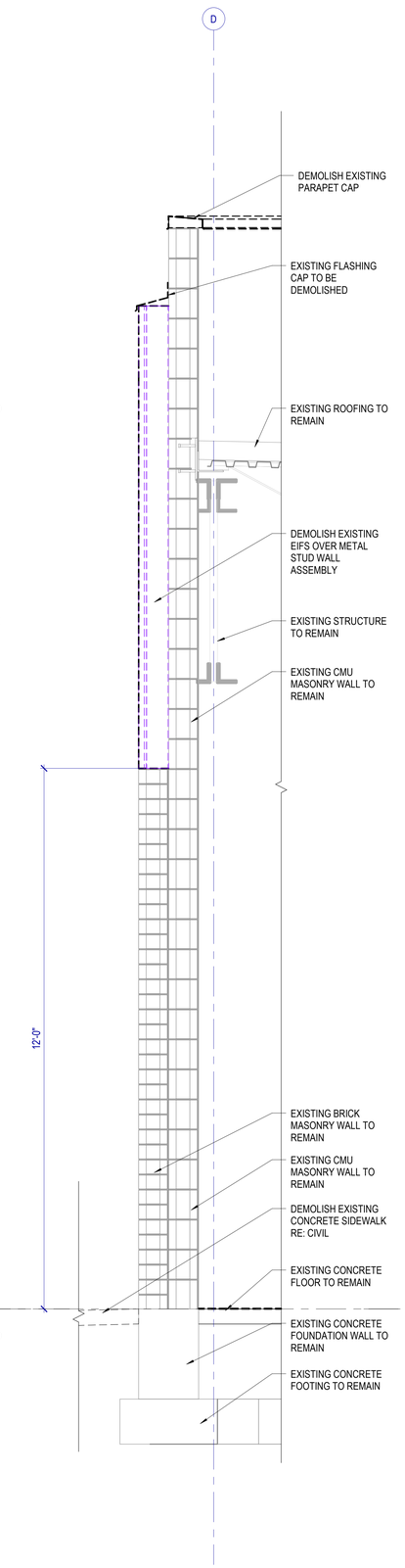

E2 DEMO WALL SECTION

SCALE: 3/4" = 1'-0"

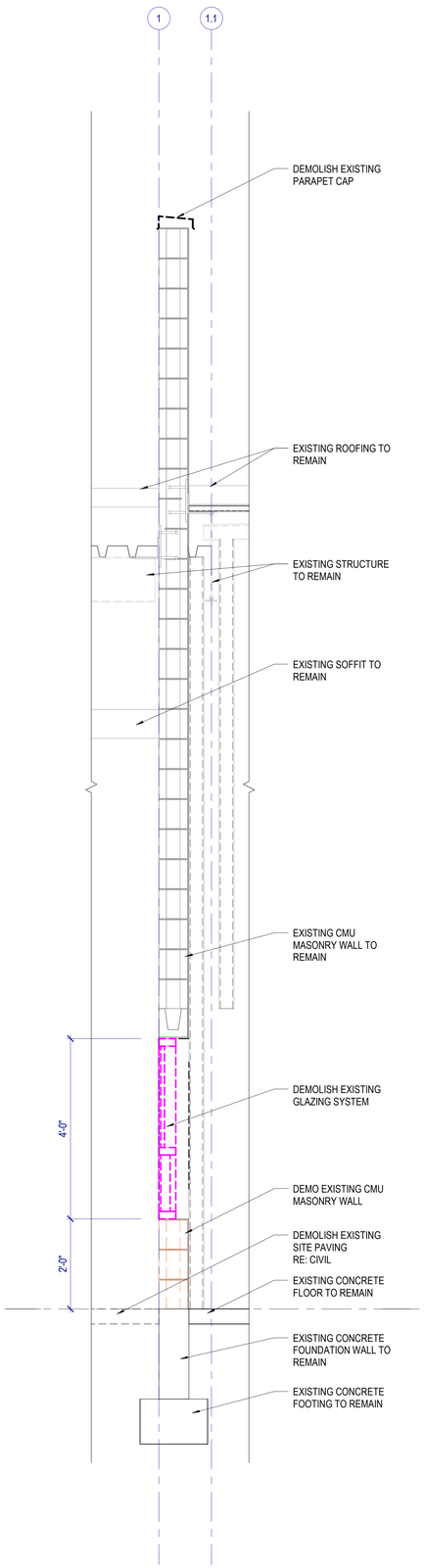

E3 DEMO WALL SECTION

SCALE: 3/4" = 1'-0"

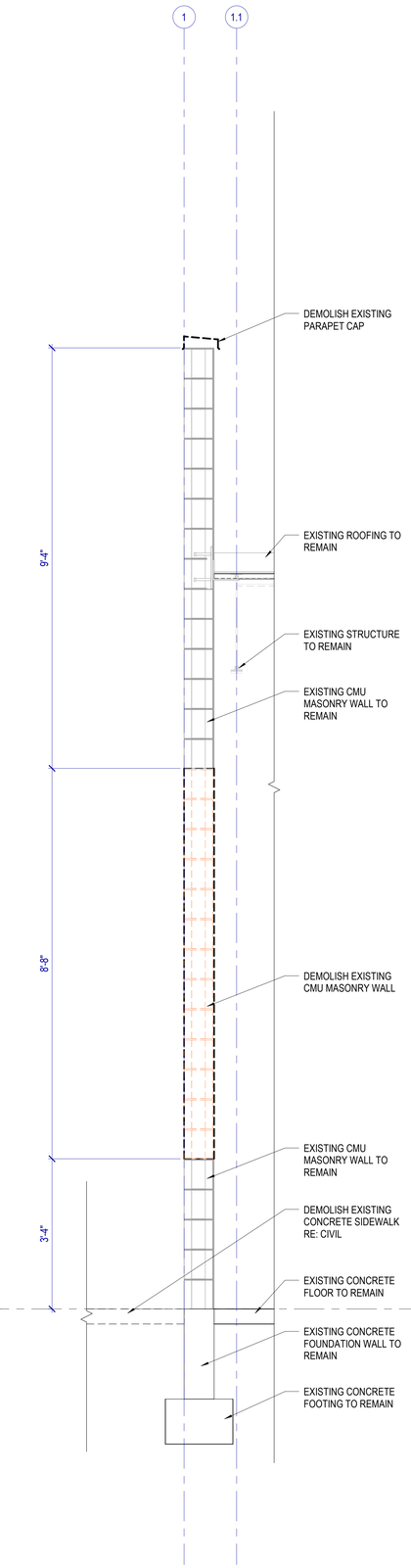

E4 DEMO WALL SECTION

SCALE: 3/4" = 1'-0"

DEMOLITION GENERAL NOTES

Existing Conditions: Verify existing site and building conditions including but not limited to underground utilities and service lines, irrigation lines, sub-surface structures and all other existing construction both above and below grade.

Protection: Protect existing construction to remain from damage during demolition and new construction work. Repair any damage resulting from this work.

Protect in-place, existing mechanical, plumbing and electrical systems above ceilings that are not shown to be removed. This includes, but is not limited to: network cabling, coax cabling, conduits, piping, ductwork, etc.

When removing concrete slabs on grade, take all necessary precautions to protect electrical lines in or under those slabs.

Site Access: Coordinate phased access to the site with the Owner, including times of restricted access.

Coordination: Coordinate extent of walls to be removed with architectural floor plan(s).

Masonry Walls: Where masonry walls are demolished, clean and repair newly exposed surfaces to match adjacent wall finish.

Salvage: Review with the owner, casework, furniture, equipment and wall mounted display surfaces left behind after owner move out, that are not shown on drawings. Identify as either salvage or to be disposed of by contractor.

Verify that existing equipment that is to remain, to be salvaged or to be re-installed, is in working condition. Provide written documentation to the Owner for any items that are not in working condition before beginning work in the area.

LEGEND - DEMOLITION

- AREA OF NO WORK
- EXISTING ITEM TO REMAIN
- EXISTING WALL TO REMAIN
- EXISTING DOOR TO REMAIN
- EXISTING WINDOW TO REMAIN
- EXISTING MOP SINK
- EXISTING SLAB AND FLOOR FINISH TO REMAIN
- EXISTING TILE FLOORING TO BE DEMOLISHED
- AREA OF SLAB ON GRADE TO BE DEMOLISHED, COORDINATE WITH ELECTRICAL AND PLUMBING PLANS WHERE PLUMBING AND ELECTRICAL CONNECTIONS ARE REQUIRED
- AREA OF ROOF ASSEMBLY AND METAL DECK TO BE DEMOLISHED, COORDINATE OPENING LOCATIONS AND SIZES WITH A120
- EXISTING RTU SUPPORTS TO BE DEMOLISHED, RE: E5/AD120
- MASONRY WALLS OR PORTION THERE OF TO BE DEMOLISHED
- METAL STUD WALL WITH GYSUM BOARD ASSEMBLY TO BE DEMOLISHED
- METAL STUD WALL WITH EIFS ASSEMBLY TO BE DEMOLISHED
- REMOVE DOOR & FRAME
- REMOVE OVERHEAD DOOR & ACCESSORIES
- EXISTING GLAZING SYSTEM TO BE DEMOLISHED
- EXISTING CONCRETE CURB & BOLLARDS TO BE DEMOLISHED
- EXISTING PLUMBING FIXTURE TO BE DEMOLISHED
- EXISTING ITEMS TO BE DEMOLISHED, SEE KEYNOTES

NOTE: WHERE WALLS AND OTHER ITEMS ARE SHOWN WITH DASHED LINES, WHETHER KEYNOTED OR NOT, REMOVE THESE ITEMS TO THE EXTENT INDICATED AND AS REQUIRED BY NEW CONSTRUCTION.

MHTN ARCHITECTS
MHTN Architects, Inc.
280 South 400 West
Suite 250
Salt Lake City, Utah 84101
Telephone (801) 595-6700
www.mhtn.com

JORDAN SCHOOL DISTRICT

JORDAN LEARNING CENTER

3706 WEST 9800 SOUTH
SOUTH JORDAN, UT 84009

©2023 MHTN ARCHITECTS, INC.
Confidentiality Notice
This document is intended for use on the Project identified herein by individuals and companies involved in the design, permitting, bidding and construction of the Project. MHTN Architects, Inc. grants limited rights to distribute and reproduce this document for this express purpose only. Distribution, printing or copying this document for purposes other than those indicated is strictly prohibited. If a digital copy of this document is received in error, please delete it.

SEAL

STATE OF UTAH
CLIFFORD HOWARD CURTIS
No. 7394786-0301
24 AUGUST 2024
LICENSED ARCHITECT

MHTN PROJECT NO: 2024528

VIEW AND PRINT THIS DRAWING IN COLOR

Original drawing is 30 x 42. Do not scale contents of this drawing.

REVISIONS
CONTRACTOR TO VERIFY DRAWINGS IN FIELD USE REFLECT LAST REVISION DATE.

NO.	DATE	DESCRIPTION

ISSUE
CONSTRUCTION DOCUMENTS
AUGUST 29, 2024

SHEET NAME
DEMOLITION WALL SECTIONS

SHEET NUMBER
AD311

Autodesk Docs://2024528 JSD Retail Remodel/A24 2024528 JSD Retail Remodel.rvt
8/28/2024 7:50:05 AM

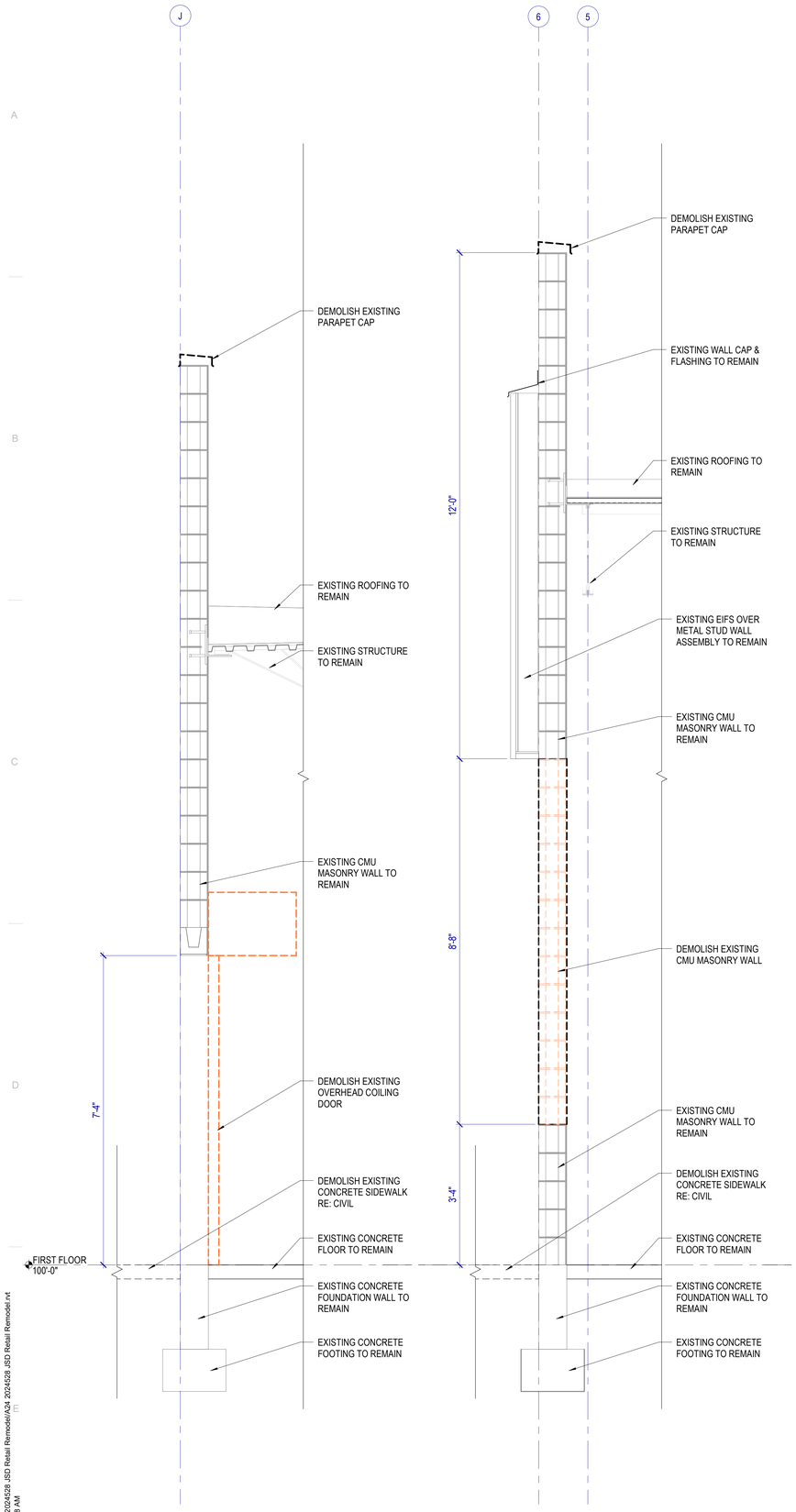

E1 DEMO WALL SECTION

SCALE: 3/4" = 1'-0"

E2 DEMO WALL SECTION

SCALE: 3/4" = 1'-0"

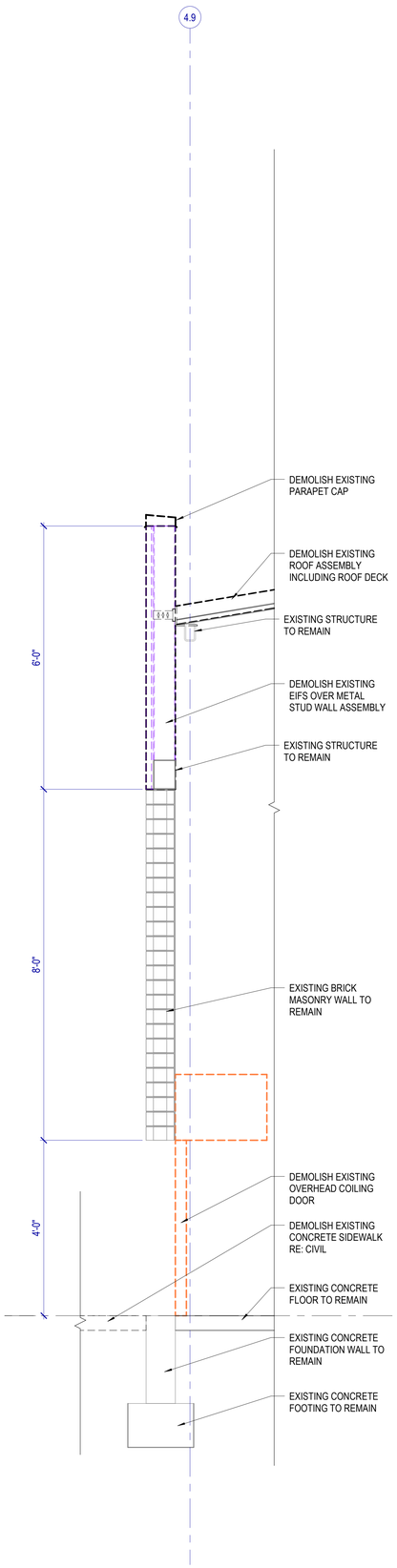

E3 DEMO WALL SECTION

SCALE: 3/4" = 1'-0"

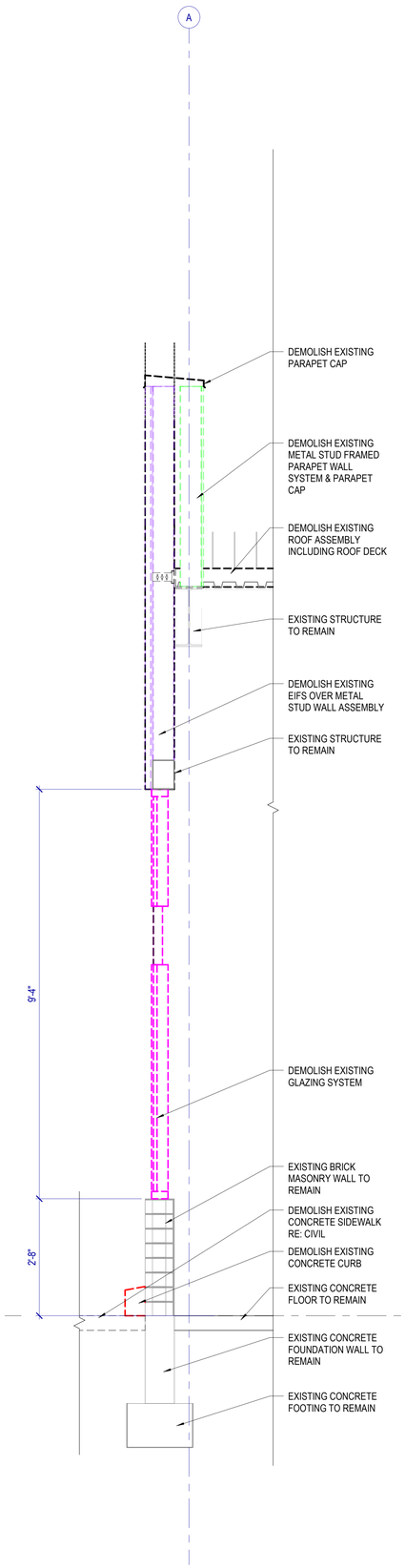

E4 DEMO WALL SECTION

SCALE: 3/4" = 1'-0"

DEMOLITION GENERAL NOTES

Existing Conditions: Verify existing site and building conditions including but not limited to underground utilities and service lines, irrigation lines, sub-surface structures and all other existing construction both above and below grade.

Protection: Protect existing construction to remain from damage during demolition and new construction work. Repair any damage resulting from this work.

Protect in-place, existing mechanical, plumbing and electrical systems above ceilings that are not shown to be removed. This includes, but is not limited to: network cabling, coax cabling, conduits, piping, ductwork, etc.

When removing concrete slabs on grade, take all necessary precautions to protect electrical lines in or under those slabs.

Site Access: Coordinate phased access to the site with the Owner, including times of restricted access.

Coordination: Coordinate extent of walls to be removed with architectural floor plan(s).

Masonry Walls: Where masonry walls are demolished, clean and repair newly exposed surfaces to match adjacent wall finish.

Salvage: Review with the owner, casework, furniture, equipment and wall mounted display surfaces left behind after owner move out, that are not shown on drawings. Identify as either salvage or to be disposed of by contractor.

Verify that existing equipment that is to remain, to be salvaged or to be re-installed, is in working condition. Provide written documentation to the Owner for any items that are not in working condition before beginning work in the area.

LEGEND - DEMOLITION

- AREA OF NO WORK
- EXISTING ITEM TO REMAIN
- EXISTING WALL TO REMAIN
- EXISTING DOOR TO REMAIN
- EXISTING WINDOW TO REMAIN
- EXISTING MOP SINK
- EXISTING SLAB AND FLOOR FINISH TO REMAIN
- EXISTING TILE FLOORING TO BE DEMOLISHED
- AREA OF SLAB ON GRADE TO BE DEMOLISHED, COORDINATE WITH ELECTRICAL AND PLUMBING PLANS WHERE PLUMBING AND ELECTRICAL CONNECTIONS ARE REQUIRED
- AREA OF ROOF ASSEMBLY AND METAL DECK TO BE DEMOLISHED, COORDINATE OPENING LOCATIONS AND SIZES WITH A120
- EXISTING RTU SUPPORTS TO BE DEMOLISHED, RE: E5/AD120
- MASONRY WALLS OR PORTION THERE OF TO BE DEMOLISHED
- METAL STUD WALL WITH GYSUM BOARD ASSEMBLY TO BE DEMOLISHED
- METAL STUD WALL WITH EIFS ASSEMBLY TO BE DEMOLISHED
- REMOVE DOOR & FRAME
- REMOVE OVERHEAD DOOR & ACCESSORIES
- EXISTING GLAZING SYSTEM TO BE DEMOLISHED
- EXISTING CONCRETE CURB & BOLLARDS TO BE DEMOLISHED
- EXISTING PLUMBING FIXTURE TO BE DEMOLISHED
- EXISTING ITEMS TO BE DEMOLISHED, SEE KEYNOTES

NOTE: WHERE WALLS AND OTHER ITEMS ARE SHOWN WITH DASHED LINES, WHETHER KEYNOTED OR NOT, REMOVE THESE ITEMS TO THE EXTENT INDICATED AND AS REQUIRED BY NEW CONSTRUCTION.

MHTN ARCHITECTS
MHTN Architects, Inc.
280 South 400 West
Suite 250
Salt Lake City, Utah 84101
Telephone (801) 595-6700
www.mhtn.com

JORDAN SCHOOL DISTRICT

JORDAN LEARNING CENTER

3706 WEST 9800 SOUTH
SOUTH JORDAN, UT 84009

©2023 MHTN ARCHITECTS, INC.
Confidentiality Notice
This document is intended for use on the Project identified herein by individuals and companies involved in the design, permitting, bidding and construction of the Project. MHTN Architects, Inc. grants limited rights to distribute and reproduce this document for this express purpose only. Distribution, printing or copying this document for purposes other than those indicated is strictly prohibited. If a digital copy of this document is received in error, please delete it.

SEAL

STATE OF UTAH
CLIFFORD HOWARD CURTIS
No. 7394786-0301
24 AUGUST 2024
LICENSED ARCHITECT

MHTN PROJECT NO: 2024528

VIEW AND PRINT THIS DRAWING IN COLOR

Original drawing is 30 x 42. Do not scale contents of this drawing.

REVISIONS
CONTRACTOR TO VERIFY DRAWINGS IN FIELD USE REFLECT LAST REVISION DATE.

NO.	DATE	DESCRIPTION

ISSUE
CONSTRUCTION DOCUMENTS
AUGUST 29, 2024

SHEET NAME
DEMOLITION WALL SECTIONS

SHEET NUMBER
AD312

Autodesk Docs://2024528 JSD Retail Remodel/A24 2024528 JSD Retail Remodel.rvt
8/28/2024 7:50:08 AM

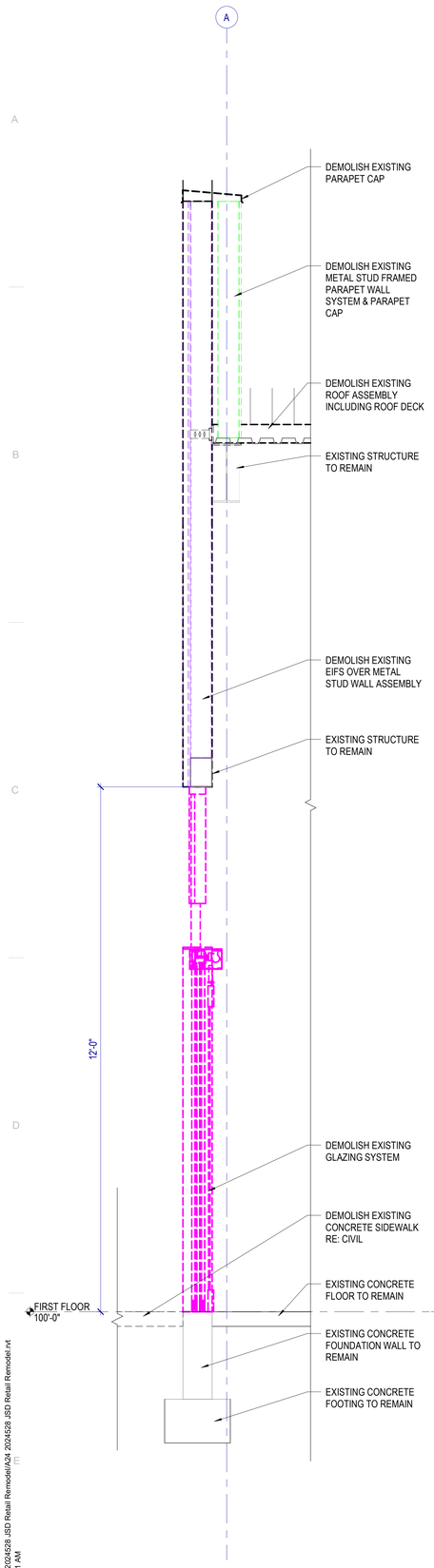

E1 DEMO WALL SECTION

SCALE: 3/4" = 1'-0"

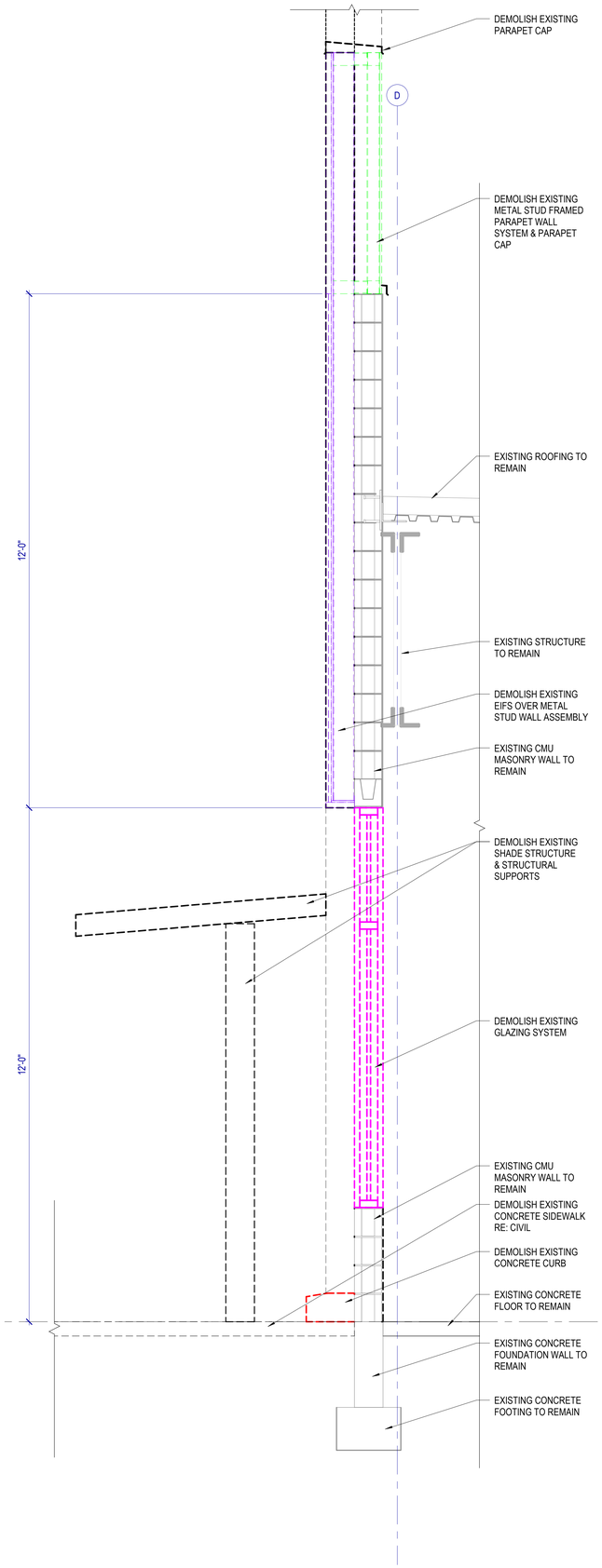

E2 DEMO WALL SECTION

SCALE: 3/4" = 1'-0"

DEMOLITION GENERAL NOTES

Existing Conditions: Verify existing site and building conditions including but not limited to underground utilities and service lines, irrigation lines, sub-surface structures and all other existing construction both above and below grade.

Protection: Protect existing construction to remain from damage during demolition and new construction work. Repair any damage resulting from this work.

Protect in-place, existing mechanical, plumbing and electrical systems above ceilings that are not shown to be removed. This includes, but is not limited to: network cabling, coax cabling, conduits, piping, ductwork, etc.

When removing concrete slabs on grade, take all necessary precautions to protect electrical lines in or under those slabs.

Site Access: Coordinate phased access to the site with the Owner, including times of restricted access.

Coordination: Coordinate extent of walls to be removed with architectural floor plan(s).

Masonry Walls: Where masonry walls are demolished, clean and repair newly exposed surfaces to match adjacent wall finish.

Salvage: Review with the owner, casework, furniture, equipment and wall mounted display surfaces left behind after owner move out, that are not shown on drawings. Identify as either salvage or to be disposed of by contractor.

Verify that existing equipment that is to remain, to be salvaged or to be re-installed, is in working condition. Provide written documentation to the Owner for any items that are not in working condition before beginning work in the area.

LEGEND - DEMOLITION

- AREA OF NO WORK
- EXISTING ITEM TO REMAIN
- EXISTING WALL TO REMAIN
- EXISTING DOOR TO REMAIN
- EXISTING WINDOW TO REMAIN
- EXISTING MOP SINK
- EXISTING SLAB AND FLOOR FINISH TO REMAIN
- EXISTING TILE FLOORING TO BE DEMOLISHED
- AREA OF SLAB ON GRADE TO BE DEMOLISHED, COORDINATE WITH ELECTRICAL AND PLUMBING PLANS WHERE PLUMBING AND ELECTRICAL CONNECTIONS ARE REQUIRED
- AREA OF ROOF ASSEMBLY AND METAL DECK TO BE DEMOLISHED, COORDINATE OPENING LOCATIONS AND SIZES WITH A120
- EXISTING RTU SUPPORTS TO BE DEMOLISHED, RE: E5/AD120
- MASONRY WALLS OR PORTION THERE OF TO BE DEMOLISHED
- METAL STUD WALL WITH GYSUM BOARD ASSEMBLY TO BE DEMOLISHED
- METAL STUD WALL WITH EIFS ASSEMBLY TO BE DEMOLISHED
- REMOVE DOOR & FRAME
- REMOVE OVERHEAD DOOR & ACCESSORIES
- EXISTING GLAZING SYSTEM TO BE DEMOLISHED
- EXISTING CONCRETE CURB & BOLLARDS TO BE DEMOLISHED
- EXISTING PLUMBING FIXTURE TO BE DEMOLISHED
- EXISTING ITEMS TO BE DEMOLISHED, SEE KEYNOTES

NOTE: WHERE WALLS AND OTHER ITEMS ARE SHOWN WITH DASHED LINES, WHETHER KEYNOTED OR NOT, REMOVE THESE ITEMS TO THE EXTENT INDICATED AND AS REQUIRED BY NEW CONSTRUCTION.

MHTN ARCHITECTS

MHTN Architects, Inc.
280 South 400 West
Suite 250
Salt Lake City, Utah 84101
Telephone (801) 595-6700
www.mhtn.com

JORDAN SCHOOL DISTRICT

JORDAN LEARNING CENTER

3706 WEST 9800 SOUTH
SOUTH JORDAN, UT 84009

©2023 MHTN ARCHITECTS, INC.

Confidentiality Notice
This document is intended for use on the Project identified herein by individuals and companies involved in the design, permitting, bidding and construction of the Project. MHTN Architects, Inc. grants limited rights to distribute and reproduce this document for this express purpose only. Distribution, printing or copying this document for purposes other than those indicated is strictly prohibited. If a digital copy of this document is received in error, please delete it.

SEAL

STATE OF UTAH
CLIFFORD HOWARD CURTIS
No. 7394786-0301
24 AUGUST 2024
LICENSED ARCHITECT

MHTN PROJECT NO. 2024528

VIEW AND PRINT THIS DRAWING IN COLOR

Original drawing is 30 x 42. Do not scale contents of this drawing.

REVISIONS
CONTRACTOR TO VERIFY DRAWINGS IN FIELD USE REFLECT LAST REVISION DATE.

NO.△	DATE	DESCRIPTION

ISSUE
CONSTRUCTION DOCUMENTS
AUGUST 29, 2024

SHEET NAME
DEMOLITION WALL SECTIONS

SHEET NUMBER
AD313

Autodesk Docs://2024528 JSD Retail Remodel/A24 2024528 JSD Retail Remodel.rvt
8/28/2024 7:50:11 AM

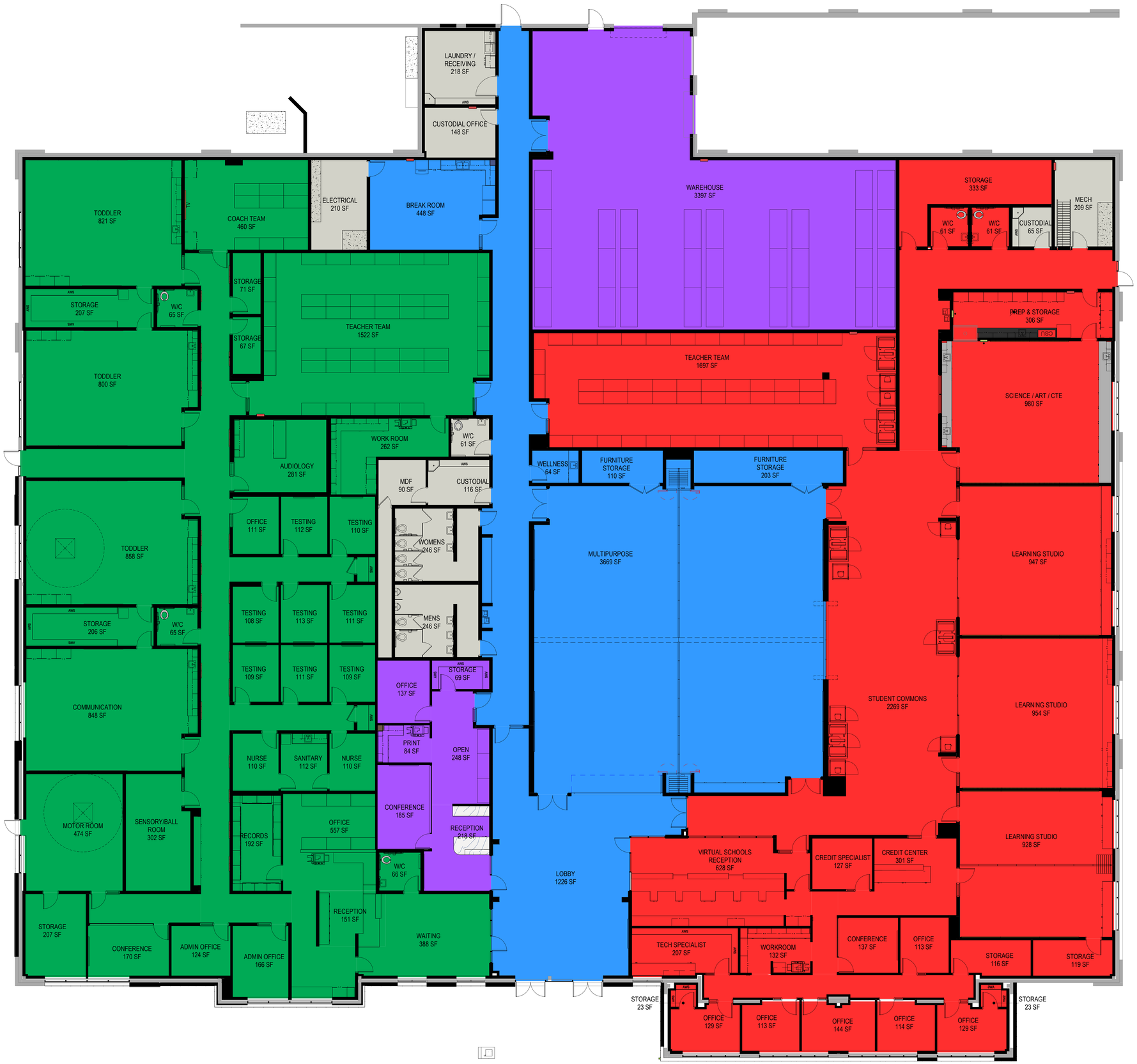

OVERALL FLOOR PLAN

SCALE: 1/8" = 1'-0"

0 4' - 0" 8' - 0" 16' - 0"

Department Legend

- BUILDING SUPPORT
- CHILD DEVELOPMENT CENTER
- JORDAN EDUCATION FOUNDATION
- SHARED (HARBOR)
- VIRTUAL SCHOOLS & TESTING

MHTN ARCHITECTS

MHTN Architects, Inc.
280 South 400 West
Suite 250
Salt Lake City, Utah 84101
Telephone (801) 595-6700
www.mhtn.com

JORDAN SCHOOL DISTRICT

JORDAN LEARNING CENTER

3706 WEST 9800 SOUTH
SOUTH JORDAN, UT 84009

©2023 MHTN ARCHITECTS, INC.

Confidentiality Notice:
This document is intended for use on the Project identified herein by individuals and companies involved in the design, permitting, bidding and construction of the Project. MHTN Architects, Inc. grants limited rights to distribute and reproduce this document for this express purpose only. Distribution, printing or copying this document for purposes other than those indicated is strictly prohibited. If a digital copy of this document is received in error, please delete it.

SEAL

STATE OF UTAH
CLIFFORD HOWARD CURTIS
No. 7394786-0301
29 AUGUST 2024
REGISTERED ARCHITECT

MHTN PROJECT NO. 2024528

Original drawing is 30 x 42. Do not scale contents of this drawing.

REVISIONS
CONTRACTOR TO VERIFY DRAWINGS IN FIELD USE REFLECT LAST REVISION DATE.

NO.	DATE	DESCRIPTION

ISSUE
CONSTRUCTION DOCUMENTS
AUGUST 29, 2024

SHEET NAME
REFERENCE PLAN

SHEET NUMBER
A100

Autodesk Docs://2024528 JSD Retail Remodel/A24 2024528 JSD Retail Remodel.rvt
8/28/2024 7:50:18 AM

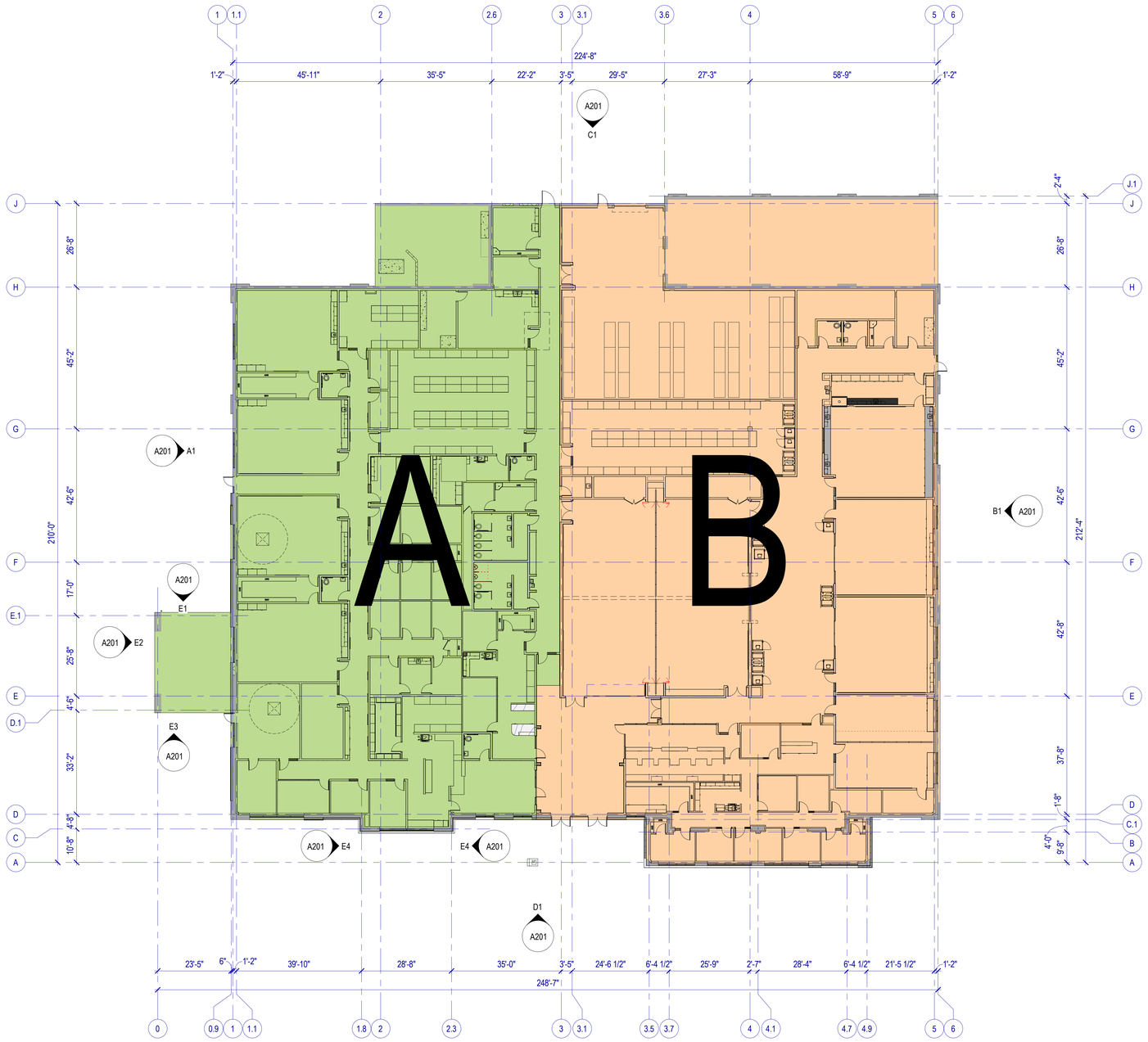

OVERALL FLOOR PLAN

SCALE: 1/16" = 1'-0"

0 8' - 0" 16' - 0" 32' - 0"

FLOOR PLAN GENERAL NOTES

References to sheets below are provided to aid in navigating the drawings.

RE: G001 for General Project notes.

RE: G200 for Fixture Mounting Heights.

RE: G400 for Floor, Roof and Exterior Wall Types.

RE: G500 for Interior Wall Types.

RE: A111 for slab edges, recesses and other transitions.

RE: A600 for the Door Schedule.

RE: A620 drawings for Window Types.

RE: A640A & A640B for wall finishes.

RE: Structural for slab recesses.

RE: Structural for concrete scoring, except where decorative scoring is shown.

Unless noted otherwise all dimensions are to face of metal stud.

When floor height varies in a room, the ceiling height shown is the height above the floor at the entry.

All outside gypsum board corners to be finished with corner guards. Refer to A641 Finish Legend for product.

Rated Construction: Provide as shown on the plans, the Life Safety Plans and elsewhere in the documents. Seal penetrations with systems applicable to the application and that have UL or other testing agency certifications.

Keynotes: Not all keynotes apply to this sheet.

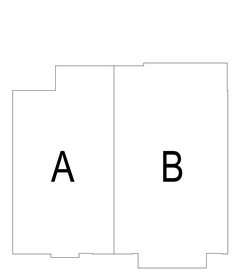

KEY PLAN

MHTN ARCHITECTS

MHTN Architects, Inc.
280 South 400 West
Suite 250
Salt Lake City, Utah 84101
Telephone (801) 595-6700
www.mhtn.com

JORDAN SCHOOL DISTRICT

JORDAN LEARNING CENTER

3706 WEST 9800 SOUTH
SOUTH JORDAN, UT 84009

©2023 MHTN ARCHITECTS, INC.

Confidentiality Notice
This document is intended for use on the Project identified herein by individuals and companies involved in the design, permitting, bidding and construction of the Project. MHTN Architects, Inc. grants limited rights to distribute and reproduce this document for this express purpose only. Distribution, printing or copying this document for purposes other than those indicated is strictly prohibited. If a digital copy of this document is received in error, please delete it.

SEAL

STATE OF UTAH
CLIFFORD HOWARD CURTIS
No. 7394786-0301
24 AUGUST 2024
REGISTERED ARCHITECT

MHTN PROJECT NO. 2024528

Original drawing is 30 x 42. Do not scale contents of this drawing.

REVISIONS
CONTRACTOR TO VERIFY DRAWINGS IN FIELD USE REFLECT LAST REVISION DATE.

NO.	DATE	DESCRIPTION

ISSUE
CONSTRUCTION DOCUMENTS
AUGUST 29, 2024

SHEET NAME
FIRST FLOOR PLAN

SHEET NUMBER
A101

Autodesk Docs://2024528 JSD Retail Remodel/A24 2024528 JSD Retail Remodel.rvt
8/29/2024 7:50:24 AM

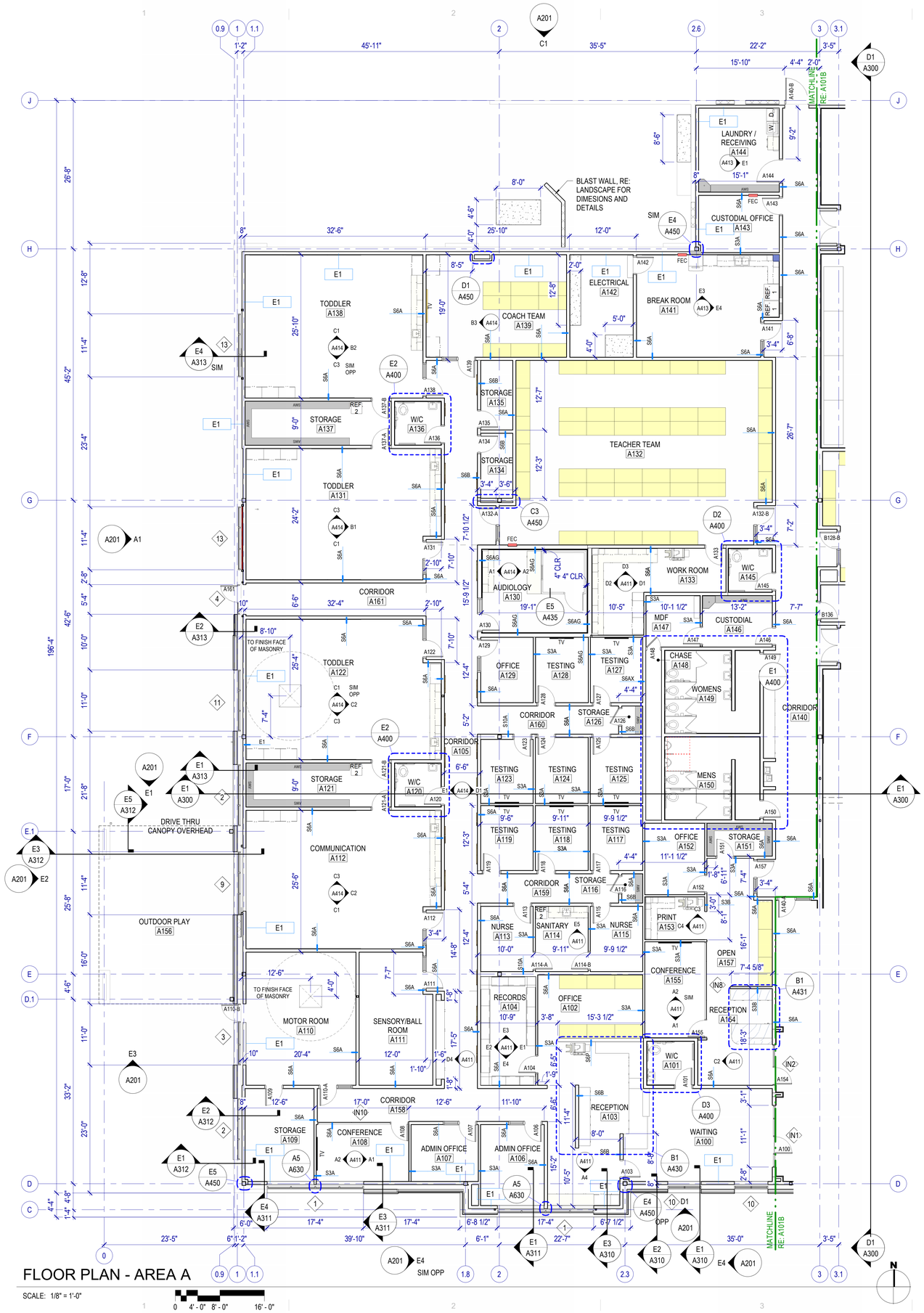

FLOOR PLAN - AREA A

SCALE: 1/8" = 1'-0"

0 4' - 0" 8' - 0" 16' - 0"

Autodesk Docs://2024528 JSD Retail Remodel/A24 2024528 JSD Retail Remodel.rvt
8/28/2024 7:50:47 AM

FLOOR PLAN GENERAL NOTES

References to sheets below are provided to aid in navigating the drawings.

RE: G001 for General Project notes.

RE: G200 for Fixture Mounting Heights.

RE: G400 for Floor, Roof and Exterior Wall Types.

RE: G500 for Interior Wall Types.

RE: A111 for slab edges, recesses and other transitions.

RE: A600 for the Door Schedule.

RE: A620 drawings for Window Types.

RE: A640A & A640B for wall finishes.

RE: Structural for slab recesses.

RE: Structural for concrete scoring, except where decorative scoring is shown.

Unless noted otherwise all dimensions are to face of metal stud.

When floor height varies in a room, the ceiling height shown is the height above the floor at the entry.

All outside gypsum board corners to be finished with corner guards. Refer to A641 Finish Legend for product.

Rated Construction: Provide as shown on the plans, the Life Safety Plans and elsewhere in the documents. Seal penetrations with systems applicable to the application and that have UL or other testing agency certifications.

Keynotes: Not all keynotes apply to this sheet.

LEGEND - FLOOR PLAN

- FEC — FIRE EXTINGUISHER + CABINET SEMI-RECESSED
- AED — AUTOMATED EXTERNAL DEFIBRILLATOR
- WALL MOUNTED TOILET RE: PLUMBING
- FLOOR MOUNTED TOILET RE: PLUMBING
- URINAL RE: PLUMBING
- WALL HUNG LAVATORY RE: PLUMBING
- COUNTER MOUNTED SINK RE: PLUMBING
- ELECTRICAL WATER COOLER RE: PLUMBING
- MOP SINK RE: C4/G201 & PLUMBING
- AWS — ADJUSTABLE WALL SHELVING - 16" DEEP SHELVES, RE: D5/A435
- W — WASHING MACHINE RE: PLUMBING
- D — DRYER RE: PLUMBING
- REF. 1 — REFRIDGERATOR,CFCI
- REF. 2 — REFRIDGERATOR,OFOI
- ICE MACHINE RE: PLUMBING
- RECORDING SOUND BOOTH, OFOI
- RECORDING SOUND BOOTH, OFOI
- TEACHER WORK DESKS, OFOI
- SHIPS LADDER, RE: E1/A340
- TV — WALL MOUNTED TV
- THERAPY SWING LOCATION, OFOI, SEE RCP FOR MOUNTING DETAIL
- LC — COUNTERTOP LASER CUTTER, OFCI
- HOUSEKEEPING PAD - 4" CONCRETE - COORDINATE WITH EQUIPMENT DIMENSIONS

NOTE: PROVIDE ITEMS INDICATED IN THE LEGEND IN THE QUANTITIES SHOWN ON THE PLAN.

KEYNOTES

MHTN ARCHITECTS
MHTN Architects, Inc.
280 South 400 West
Suite 250
Salt Lake City, Utah 84101
Telephone (801) 595-6700
www.mhtn.com

JORDAN SCHOOL DISTRICT

JORDAN LEARNING CENTER
3706 WEST 9800 SOUTH
SOUTH JORDAN, UT 84009

©2023 MHTN ARCHITECTS, INC.
Confidentiality Notice:
This document is intended for use on the Project identified herein by individuals and companies involved in the design, permitting, bidding and construction of the Project. MHTN Architects, Inc. grants limited rights to distribute and reproduce this document for this express purpose only. Distribution, printing or copying this document for purposes other than those indicated is strictly prohibited. If a digital copy of this document is received in error, please delete it.

SEAL

STATE OF UTAH
CLIFFORD HOWARD CURTIS
No. 7394786-0301
24 AUGUST 2024
REGISTERED ARCHITECT

MHTN PROJECT NO. 2024528

Original drawing is 30 x 42. Do not scale contents of this drawing.

REVISIONS
CONTRACTOR TO VERIFY DRAWINGS IN FIELD USE REFLECT LAST REVISION DATE.

NO.	DATE	DESCRIPTION

ISSUE
CONSTRUCTION DOCUMENTS
AUGUST 29, 2024

SHEET NAME
FIRST FLOOR PLAN - AREA A

SHEET NUMBER
A101A

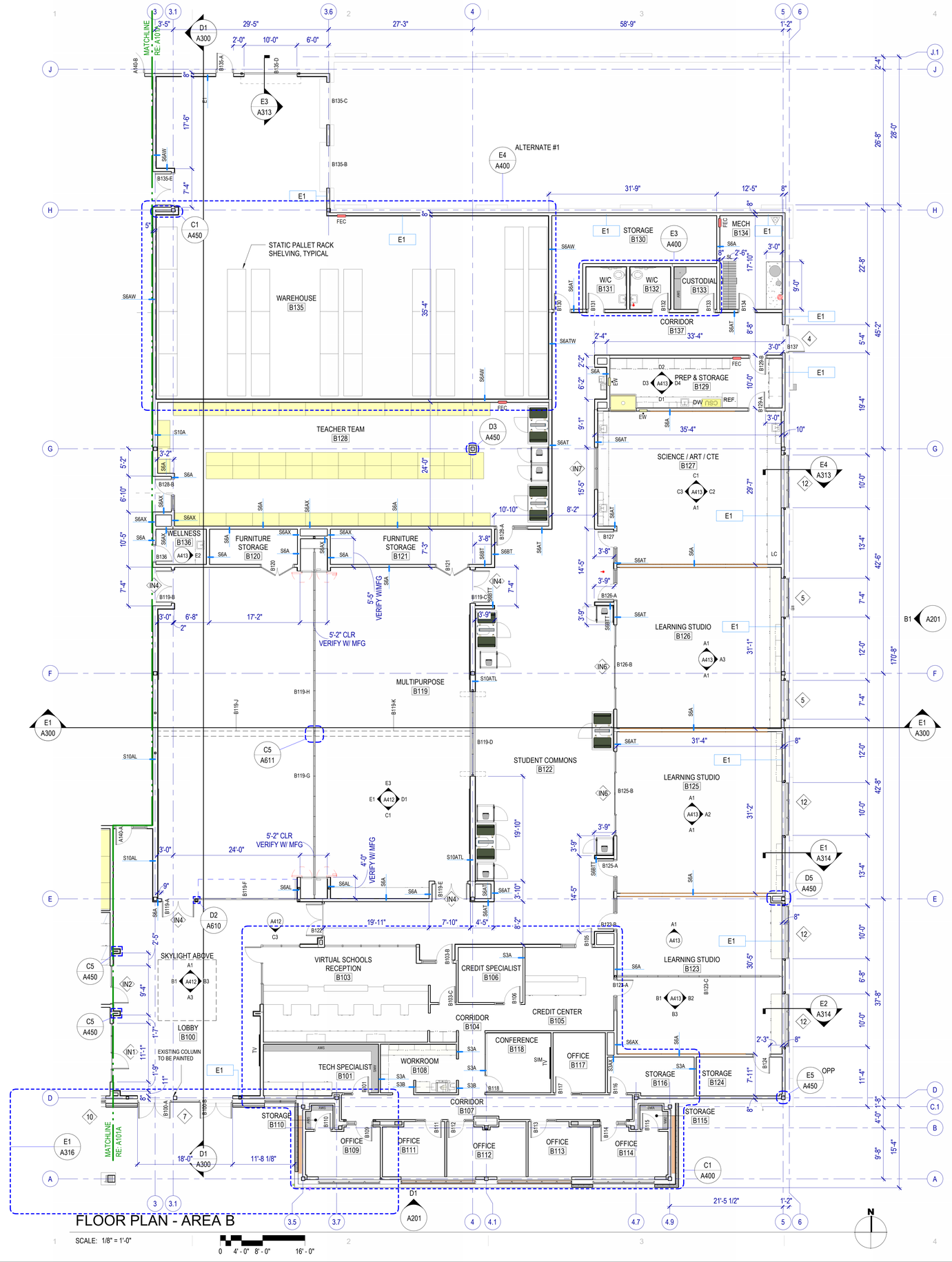

FLOOR PLAN GENERAL NOTES

References to sheets below are provided to aid in navigating the drawings.

RE: G001 for General Project notes.

RE: G200 for Fixture Mounting Heights.

RE: G400 for Floor, Roof and Exterior Wall Types.

RE: G500 for Interior Wall Types.

RE: A111 for slab edges, recesses and other transitions.

RE: A600 for the Door Schedule.

RE: A620 drawings for Window Types.

RE: A640A & A640B for wall finishes.

RE: Structural for slab recesses.

RE: Structural for concrete scoring, except where decorative scoring is shown.

Unless noted otherwise all dimensions are to face of metal stud.

When floor height varies in a room, the ceiling height shown is the height above the floor at the entry.

All outside gypsum board corners to be finished with corner guards. Refer to A641 Finish Legend for product.

Rated Construction: Provide as shown on the plans, the Life Safety Plans and elsewhere in the documents. Seal penetrations with systems applicable to the application and that have UL or other testing agency certifications.

Keynotes: Not all keynotes apply to this sheet.

LEGEND - FLOOR PLAN

- FEC — FIRE EXTINGUISHER + CABINET SEMI-RECESSED
- AED — AUTOMATED EXTERNAL DEFIBRILLATOR
- WALL MOUNTED TOILET RE: PLUMBING
- FLOOR MOUNTED TOILET RE: PLUMBING
- URINAL RE: PLUMBING
- WALL HUNG LAVATORY RE: PLUMBING
- COUNTER MOUNTED SINK RE: PLUMBING
- ELECTRICAL WATER COOLER RE: PLUMBING
- MOP SINK RE: C4/G201 & PLUMBING
- AWS — ADJUSTABLE WALL SHELVING - 16" DEEP SHELVES, RE: D5/A435
- W — WASHING MACHINE RE: PLUMBING
- D — DRYER RE: PLUMBING
- REF. 1 — REFRIDGERATOR,CFCI
- REF. 2 — REFRIDGERATOR,OFOI
- ICE MACHINE RE: PLUMBING
- RECORDING SOUND BOOTH, OFOI
- RECORDING SOUND BOOTH, OFOI
- TEACHER WORK DESKS, OFOI
- SL — SHIPS LADDER, RE: E1/A340
- TV — WALL MOUNTED TV
- THERAPY SWING LOCATION, OFOI, SEE RCP FOR MOUNTING DETAIL
- LC — COUNTERTOP LASER CUTTER, OFCI
- HOUSEKEEPING PAD - 4" CONCRETE - COORDINATE WITH EQUIPMENT DIMENSIONS

NOTE: PROVIDE ITEMS INDICATED IN THE LEGEND IN THE QUANTITIES SHOWN ON THE PLAN.

MHTN ARCHITECTS

MHTN Architects, Inc.
280 South 400 West
Suite 250
Salt Lake City, Utah 84101
Telephone (801) 595-6700
www.mhtn.com

JORDAN SCHOOL DISTRICT

JORDAN LEARNING CENTER

3706 WEST 9800 SOUTH
SOUTH JORDAN, UT 84009

©2023 MHTN ARCHITECTS, INC.

Confidentiality Notice:
This document is intended for use on the Project identified herein by individuals and companies involved in the design, permitting, bidding and construction of the Project. MHTN Architects, Inc. grants limited rights to distribute and reproduce this document for this express purpose only. Distribution, printing or copying this document for purposes other than those indicated is strictly prohibited. If a digital copy of this document is received in error, please delete it.

SEAL

STATE OF UTAH
CLIFFORD HOWARD CURTIS
No. 7394786-0301
24 AUGUST 2024
LICENSED ARCHITECT

MHTN PROJECT NO. 2024528

Original drawing is 30 x 42. Do not scale contents of this drawing.

REVISIONS
CONTRACTOR TO VERIFY DRAWINGS IN FIELD USE REFLECT LAST REVISION DATE.

NO.	DATE	DESCRIPTION

ISSUE
CONSTRUCTION DOCUMENTS
AUGUST 29, 2024

SHEET NAME
FIRST FLOOR PLAN - AREA B

SHEET NUMBER
A101B

Autodesk Docs://2024528 JSD Retail Remodel/A24 2024528 JSD Retail Remodel.rvt
8/28/2024 7:51:08 AM

SLAB EDGE PLAN GENERAL NOTES

Coordinate with Structural.

LEGEND - SLAB EDGE

- DEPRESSED SLAB
- INFILL CONCRETE SLAB
- 4" HOUSE KEEPING PAD, SEE FLOOR PLANS FOR DIMENSIONS

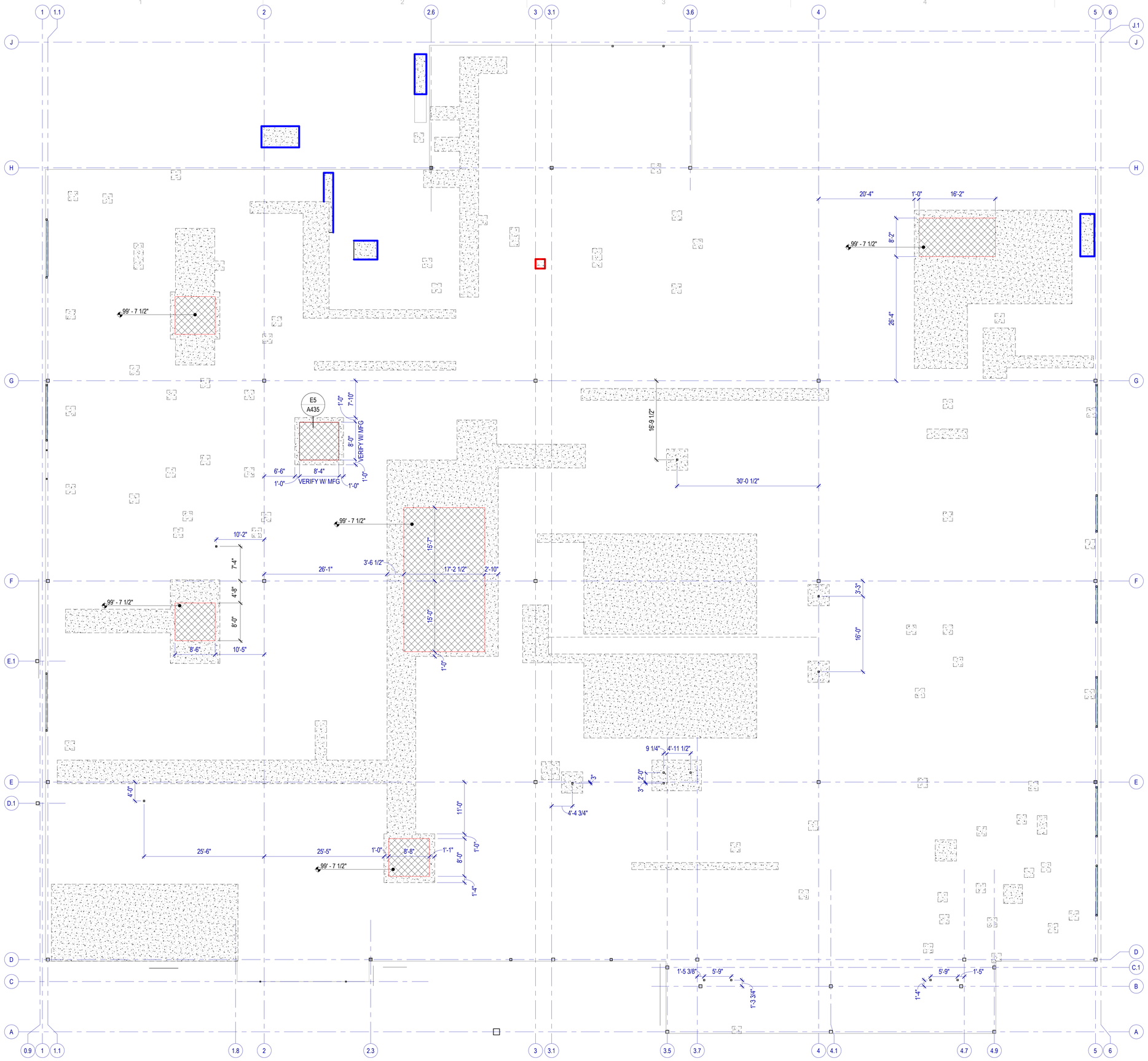

FIRST FLOOR SLAB EDGE PLAN

SCALE: 1/8" = 1'-0"

0 4' - 0" 8' - 0" 16' - 0"

Autodesk Docs://2024528 JSD Retail Remodel/A24 2024528 JSD Retail Remodel.rvt
8/28/2024 7:51:10 AM

MHTN ARCHITECTS

MHTN Architects, Inc.
280 South 400 West
Suite 250
Salt Lake City, Utah 84101
Telephone (801) 595-6700
www.mhtn.com

JORDAN SCHOOL DISTRICT

JORDAN LEARNING CENTER

3706 WEST 9800 SOUTH
SOUTH JORDAN, UT 84009

©2023 MHTN ARCHITECTS, INC.

Confidentiality Notice:
This document is intended for use on the Project identified herein by individuals and companies involved in the design, permitting, bidding and construction of the Project. MHTN Architects, Inc. grants limited rights to distribute and reproduce this document for this express purpose only. Distribution, printing or copying this document for purposes other than those indicated is strictly prohibited. If a digital copy of this document is received in error, please delete it.

SEAL

STATE OF UTAH
CLIFFORD HOWARD CURTIS
No. 7394786-0301
24 AUGUST 2024
REVISED ARCHITECT

MHTN PROJECT NO. 2024528

Original drawing is 30 x 42. Do not scale contents of this drawing.

REVISIONS
CONTRACTOR TO VERIFY DRAWINGS IN FIELD USE REFLECT LAST REVISION DATE

NO.	DATE	DESCRIPTION

ISSUE
CONSTRUCTION DOCUMENTS
AUGUST 29, 2024

SHEET NAME
FIRST FLOOR SLAB EDGE PLAN

SHEET NUMBER
A111

ROOF PLAN GENERAL NOTES

References to sheets below are provided to aid in navigating the drawings.

RE: G400 for Roof Types.

RE: A340 for Roof Details.

RE: Plumbing drawings for pipe vent quantities and locations. Provide flashing per roof and plumbing details.

Crickets: Provide crickets at roof top mechanical units, roof access hatches and other similar conditions for positive drainage.

Roof Deck Limitations: Do not use the steel roof deck to support loads from plumbing, HVAC ducts, light fixtures, architectural elements or equipment of any kind, UNO.

Roof Insulation: Provide R-30 minimum, unless noted otherwise.

Walkway Pads: Provide walkway pads as shown, and if not shown, provide pads from all points of roof access (ladders, doors, access hatches) to mechanical equipment, roof drains, and all other rooftop equipment. Adjust pathways as required to miss penetrations and rooftop equipment that may not be shown on the roof plan.

Slope: Provide ¼" per foot minimum slope across the roof.

Roof Membrane at Parapet Walls: Continue membrane up parapet walls, over the top and down the other side, lapping the wood nailers and the material below them by 1" minimum.

Elevation Datum Points: Datum points are to top of deck unless noted otherwise.

LEGEND - ROOF PLAN

- ROOF TYPE R-1 SINGLE-PLY MEMBRANE - SLOPE 1/4" PER FOOT MINIMUM UNO
- CRICKETS: R-1 ROOF SYSTEM WITH TAPERED INSULATION - MAINTAIN 1/4" PER FOOT SLOPE AT CRICKET VALLEYS
- EXISTING ROOF
- PATCH AND REPAIR ROOF
- NEW METAL DECK AND ROOF PATCH AND REPAIR, SEE DETAIL D5 / A340
- WALKWAY PAD - 30" MINIMUM WIDTH, SEE DETAIL A1 / A340
- PRIMARY AND SECONDARY ROOF DRAINS, SEE DETAIL B5 / A340
- DIRECTION OF SLOPE
- ROOF HATCH, SEE DETAIL E4 / A340
- ROOF TOP EQUIPMENT - RE: MECHANICAL, SEE DETAIL A2 / A340 PATCH AND REPAIR ROOF MEMBRANE AS NEEDED
- SKYLIGHT, SEE RCP FOR DETAILS

NEW ROOF AND METAL DECK OVER EXISTING STRUCTURE

ROOF PLAN

SCALE: 3/32" = 1'-0"

0 16' - 0" 32' - 0" 64' - 0"

N

MHTN ARCHITECTS

MHTN Architects, Inc.
280 South 400 West
Suite 250
Salt Lake City, Utah 84101
Telephone (801) 595-6700
www.mhtn.com

JORDAN SCHOOL DISTRICT

JORDAN LEARNING CENTER

3706 WEST 9800 SOUTH
SOUTH JORDAN, UT 84009

©2023 MHTN ARCHITECTS, INC.

Confidentiality Notice:
This document is intended for use on the Project identified herein by individuals and companies involved in the design, permitting, bidding and construction of the Project. MHTN Architects, Inc. grants limited rights to distribute and reproduce this document for this express purpose only. Distribution, printing or copying this document for purposes other than those indicated is strictly prohibited. If a digital copy of this document is received in error, please delete it.

SEAL

STATE OF UTAH
CLIFFORD HOWARD CURTIS
No. 7394786-0301
24 AUGUST 2024
LICENSED ARCHITECT

MHTN PROJECT NO. 2024528

Original drawing is 30 x 42. Do not scale contents of this drawing.

REVISIONS
CONTRACTOR TO VERIFY DRAWINGS IN FIELD USE REFLECT LAST REVISION DATE.

NO.	DATE	DESCRIPTION

ISSUE
CONSTRUCTION DOCUMENTS
AUGUST 29, 2024

SHEET NAME
ROOF PLAN

SHEET NUMBER
A120

Autodesk Docs://2024528 JSD Retail Remodel/A24 2024528 JSD Retail Remodel.rvt
8/28/2024 7:51:14 AM

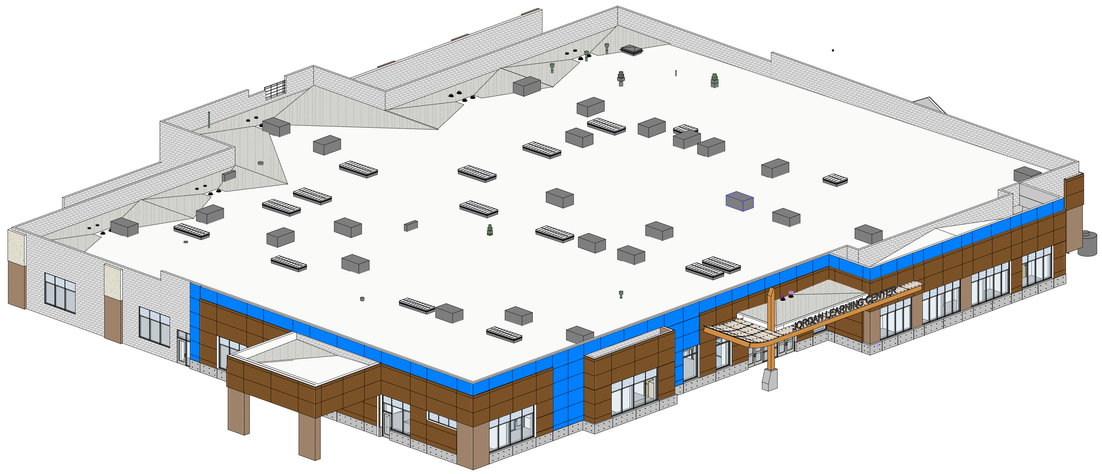

B1 AXONOMETRIC - SOUTH WEST

SCALE:

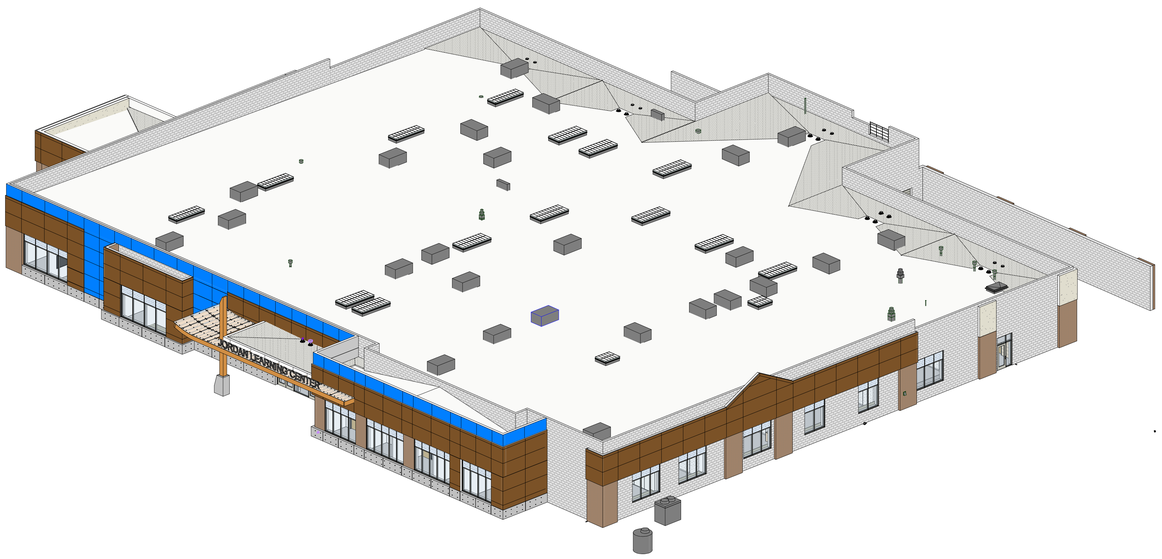

E1 AXONOMETRIC - SOUTH EAST

SCALE:

EXTERIOR ELEVATIONS GENERAL NOTES

Exterior Finishes: Provide exterior finishes, continuous until a transition is indicated. Provide on all similar elements, and on surfaces not shown in elevation such as back sides of piers, columns and other surfaces that may not be visible in the elevation view.

Lighting: Coordinate wall and soffit mounted lighting locations with Electrical drawings and with the Architect prior to rough-in.

LEGEND - EXTERIOR ELEVATION

- EXISTING BRICK - TO BE CLEANED
- EXISTING CMU - TO BE CLEANED & SEALED
- EXISTING EIFS - TO BE CLEANED
- COMPOSITE METAL PANEL TYPE 1: BASIS OF DESIGN - ALOPOIC "MBU BLUE"
- TYPICAL METAL WALL PANEL JOINT
- COMPOSITE METAL PANEL TYPE 2: BASIS OF DESIGN - ALOPOIC "NWS WHITE SILVER"
- PHENOLIC PANEL CLADDING SYSTEM TYPE 1: BASIS OF DESIGN: PRODEMA RUSTIC
- TYPICAL PHENOLIC WALL PANEL JOINT
- PHENOLIC PANEL CLADDING SYSTEM TYPE 2: BASIS OF DESIGN: PRODEMA PALE
- EXTERIOR ARCHITECTURAL CONCRETE
- MASONRY TYPE 1: EXPOSED CMU INFILL 8"x8"x16" RUNNING BOND SPLIT-FACE CMU, CUSTOM COLOR TO MATCH EXISTING
- MASONRY TYPE 2: EXPOSED CMU INFILL 8"x8"x16" RUNNING BOND SPLIT-FACE CMU, CUSTOM COLOR TO MATCH EXISTING
- MASONRY TYPE 3: CONCEALED CMU INFILL 8"x8"x16" RUNNING BOND SMOOTH FACE CMU, STANDARD GREY COLOR
- GLAZING
- SPANDREL PANEL
- MOCKUP
- PROVIDE MOCKUP OF AREA AS INDICATED

MHTN ARCHITECTS

MHTN Architects, Inc.
280 South 400 West
Suite 250
Salt Lake City, Utah 84101
Telephone (801) 595-6700
www.mhtn.com

JORDAN SCHOOL DISTRICT

JORDAN LEARNING CENTER

3706 WEST 9800 SOUTH
SOUTH JORDAN, UT 84009

©2023 MHTN ARCHITECTS, INC.

Confidentiality Notice:
This document is intended for use on the Project identified herein by individuals and companies involved in the design, permitting, bidding and construction of the Project. MHTN Architects, Inc. grants limited rights to distribute and reproduce this document for this express purpose only. Distribution, printing or copying this document for purposes other than those indicated is strictly prohibited. If a digital copy of this document is received in error, please delete it.

SEAL

STATE OF UTAH
CLIFFORD HOWARD CURTIS
No. 7394786-0301
24 AUGUST 2024
LICENSED ARCHITECT

MHTN PROJECT NO. 2024528

Original drawing is 30 x 42. Do not scale contents of this drawing.

REVISIONS
CONTRACTOR TO VERIFY DRAWINGS IN FIELD USE REFLECT LAST REVISION DATE.

NO.	DATE	DESCRIPTION

ISSUE
CONSTRUCTION DOCUMENTS
AUGUST 29, 2024

SHEET NAME
EXTERIOR AXONOMETRICS

SHEET NUMBER
A200

Autodesk Docs://2024528 JSD Retail Remodel/A24 2024528 JSD Retail Remodel.rvt
8/28/2024 7:51:27 AM

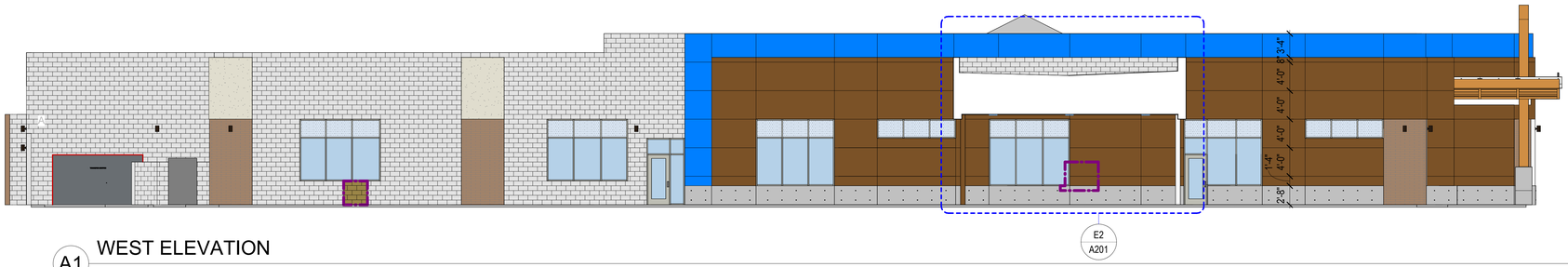

A1 WEST ELEVATION

SCALE: 1/8" = 1'-0"

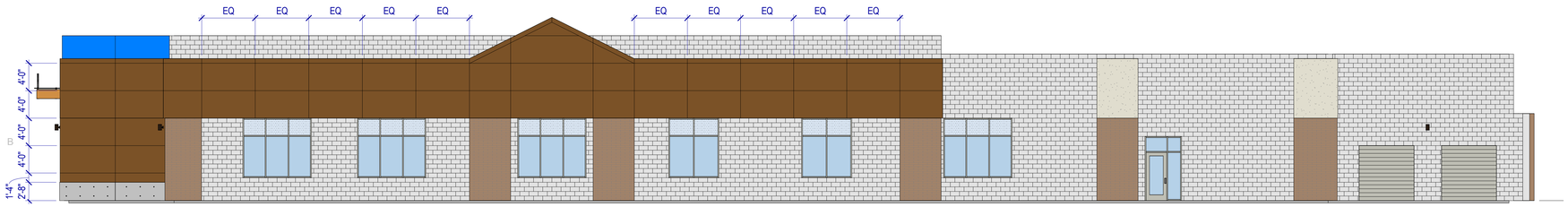

B1 EAST ELEVATION

SCALE: 1/8" = 1'-0"

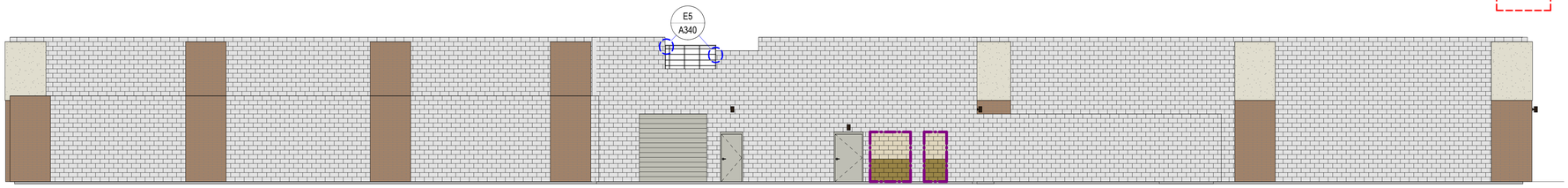

C1 NORTH ELEVATION

SCALE: 1/8" = 1'-0"

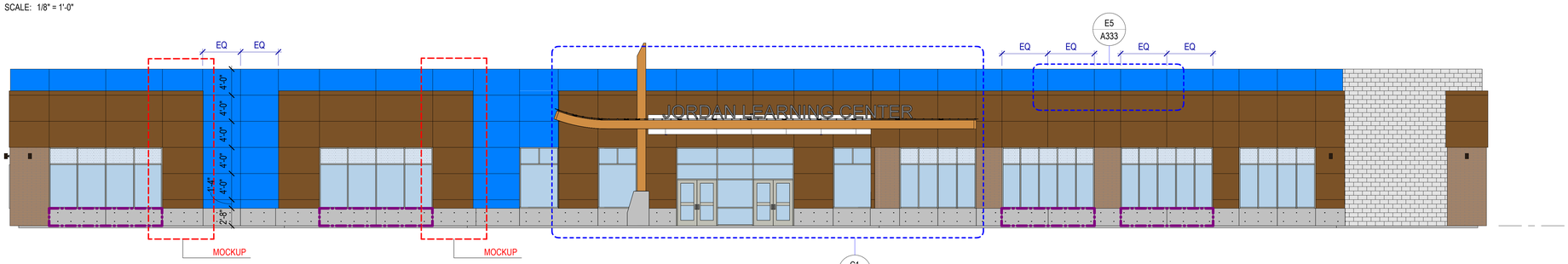

D1 SOUTH ELEVATION

SCALE: 1/8" = 1'-0"

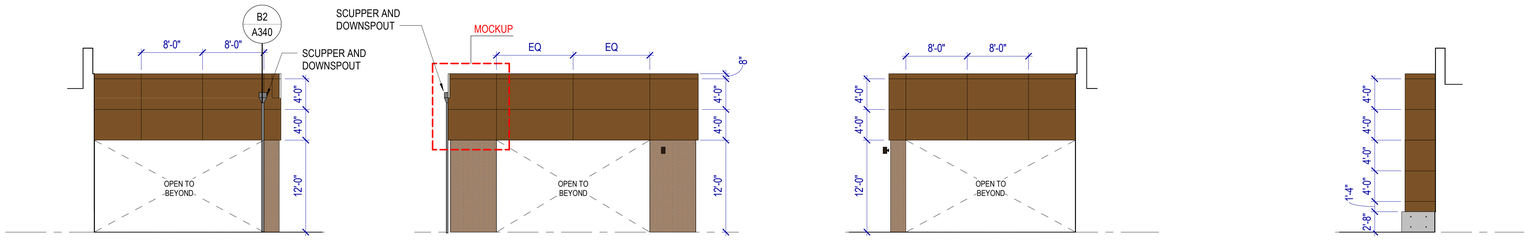

E1 DRIVE THRU NORTH ELEVATION

SCALE: 1/8" = 1'-0"

E2 DRIVE THRU WEST ELEVATION

SCALE: 1/8" = 1'-0"

E3 DRIVE THRU SOUTH ELEVATION

SCALE: 1/8" = 1'-0"

E4 ELEVATION

SCALE: 1/8" = 1'-0"

EXTERIOR ELEVATIONS GENERAL NOTES

Exterior Finishes: Provide exterior finishes, continuous until a transition is indicated. Provide on all similar elements, and on surfaces not shown in elevation such as back sides of piers, columns and other surfaces that may not be visible in the elevation view.

Lighting: Coordinate wall and soffit mounted lighting locations with Electrical drawings and with the Architect prior to rough-in.

LEGEND - EXTERIOR ELEVATION

- EXISTING BRICK - TO BE CLEANED
- EXISTING CMU - TO BE CLEANED & SEALED
- EXISTING EIFS - TO BE CLEANED
- COMPOSITE METAL PANEL TYPE 1: BASIS OF DESIGN - ALOPOIC "MBU BLUE"
- TYPICAL METAL WALL PANEL JOINT
- COMPOSITE METAL PANEL TYPE 2: BASIS OF DESIGN - ALOPOIC "NWS WHITE SILVER"
- PHENOLIC PANEL CLADDING SYSTEM TYPE 1: BASIS OF DESIGN: PRODEMA RUSTIC
- TYPICAL PHENOLIC WALL PANEL JOINT
- PHENOLIC PANEL CLADDING SYSTEM TYPE 2: BASIS OF DESIGN: PRODEMA PALE
- EXTERIOR ARCHITECTURAL CONCRETE
- MASONRY TYPE 1: EXPOSED CMU INFILL 8"x8"x16" RUNNING BOND SPLIT-FACE CMU, CUSTOM COLOR TO MATCH EXISTING
- MASONRY TYPE 2: EXPOSED CMU INFILL 8"x8"x16" RUNNING BOND SPLIT-FACE CMU, CUSTOM COLOR TO MATCH EXISTING
- MASONRY TYPE 3: CONCEALED CMU INFILL 8"x8"x16" RUNNING BOND SMOOTH FACE CMU, STANDARD GREY COLOR
- GLAZING
- SPANDREL PANEL
- MOCKUP
- PROVIDE MOCKUP OF AREA AS INDICATED

MHTN ARCHITECTS

MHTN Architects, Inc.
280 South 400 West
Suite 250
Salt Lake City, Utah 84101
Telephone (801) 595-6700
www.mhtn.com

JORDAN SCHOOL DISTRICT

JORDAN LEARNING CENTER

3706 WEST 9800 SOUTH
SOUTH JORDAN, UT 84009

©2023 MHTN ARCHITECTS, INC.

Confidentiality Notice:
This document is intended for use on the Project identified herein by individuals and companies involved in the design, permitting, bidding and construction of the Project. MHTN Architects, Inc. grants limited rights to distribute and reproduce this document for this express purpose only. Distribution, printing or copying this document for purposes other than those indicated is strictly prohibited. If a digital copy of this document is received in error, please delete it.

SEAL

STATE OF UTAH
CLIFFORD HOWARD CURTIS
No. 7394786-0301
24 AUGUST 2024
LICENSED ARCHITECT

MHTN PROJECT NO. 2024528

Original drawing is 30 x 42. Do not scale contents of this drawing.

REVISIONS
CONTRACTOR TO VERIFY DRAWINGS IN FIELD USE REFLECT LAST REVISION DATE.

NO.	DATE	DESCRIPTION

ISSUE
CONSTRUCTION DOCUMENTS
AUGUST 29, 2024

SHEET NAME
EXTERIOR ELEVATIONS

SHEET NUMBER
A201

Autodesk Docs://2024528 JSD Retail Remodel/A24 2024528 JSD Retail Remodel.rvt
8/28/2024 7:51:34 AM

D1 BUILDING SECTION

SCALE: 1/8" = 1'-0"

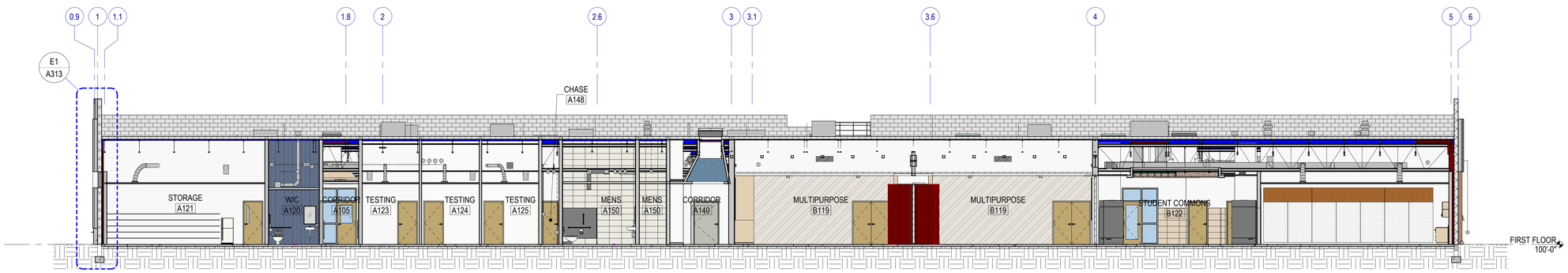

E1 BUILDING SECTION

SCALE: 1/8" = 1'-0"

Autodesk Docs://2024528 JSD Retail Remodel/A24 2024528 JSD Retail Remodel.rvt
8/29/2024 7:51:41 AM

MHTN ARCHITECTS

MHTN Architects, Inc.
280 South 400 West
Suite 250
Salt Lake City, Utah 84101
Telephone (801) 595-6700
www.mhtn.com

JORDAN SCHOOL DISTRICT

JORDAN LEARNING CENTER

3706 WEST 9800 SOUTH
SOUTH JORDAN, UT 84009

©2023 MHTN ARCHITECTS, INC.

Confidentiality Notice
This document is intended for use on the Project identified herein by individuals and companies involved in the design, permitting, bidding and construction of the Project. MHTN Architects, Inc. grants limited rights to distribute and reproduce this document for purposes related to the Project. Distributing or reproducing this document for purposes other than those indicated is strictly prohibited. If a digital copy of this document is received in error, please delete it.

SEAL

STATE OF UTAH
CLIFFORD HOWARD CURTIS
No. 7394786-0301
24 AUGUST 2024
REGISTERED ARCHITECT

MHTN PROJECT NO. 2024528

Original drawing is 30 x 42. Do not scale contents of this drawing.

REVISIONS
CONTRACTOR TO VERIFY DRAWINGS IN FIELD USE REFLECT LAST REVISION DATE.

NO.	DATE	DESCRIPTION

ISSUE
CONSTRUCTION DOCUMENTS
AUGUST 29, 2024

SHEET NAME
BUILDING SECTIONS

SHEET NUMBER
A300

WALL SECTION GENERAL NOTES

RE: Structural for concrete slab on grade thickness.

RE: G400 for Exterior Wall, Floor and Roof Types.

Air Barrier: Seal penetrations through the air barrier per manufacturer's details.

Spray-Applied Fireproofing: Where spray-applied fireproofing is removed for attachment of walls, hangers, clip angles, etc., re-apply the fireproofing material to re-establish the required level of protection.

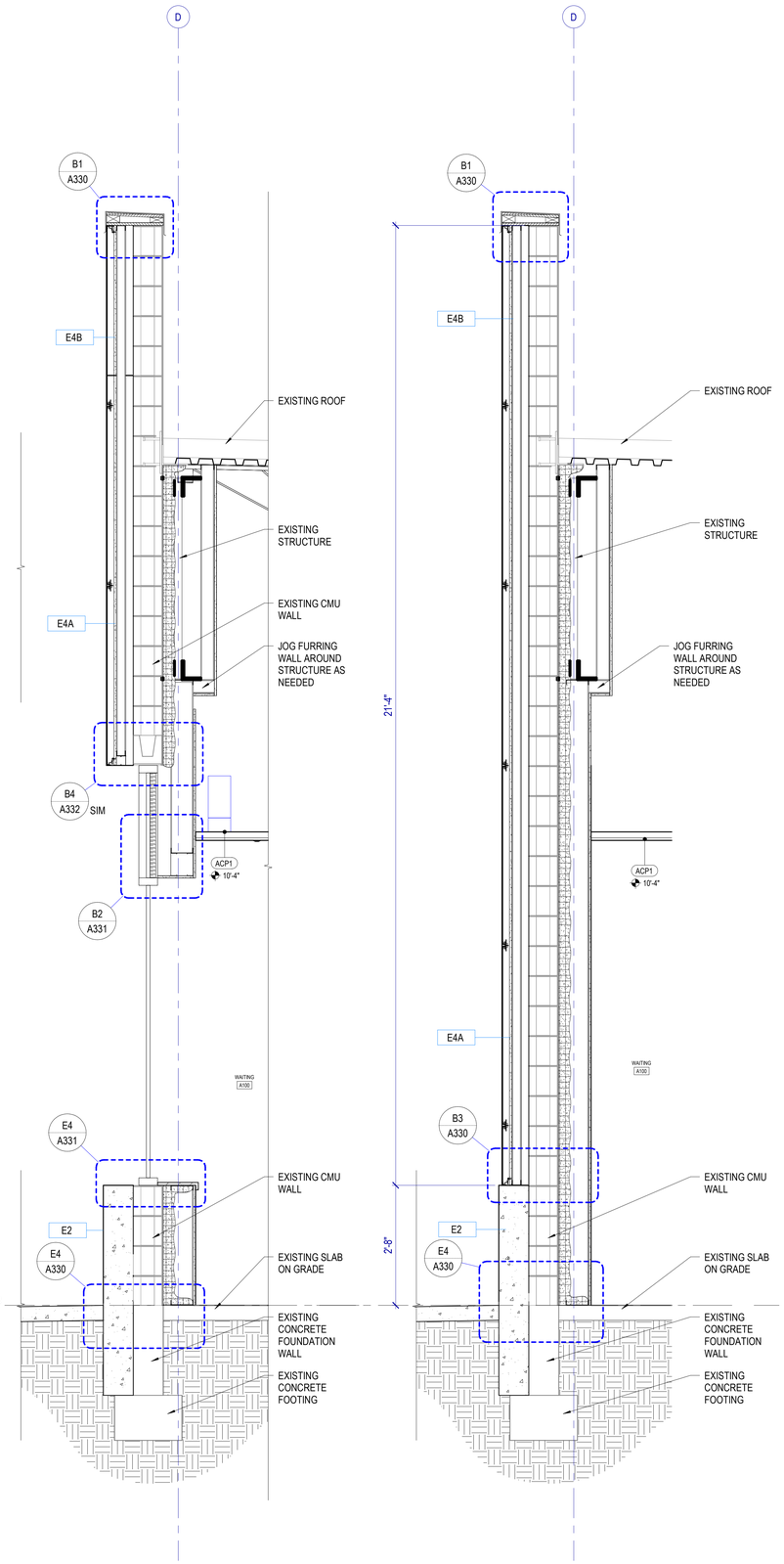

E1 WALL SECTION

SCALE: 3/4" = 1'-0"

E2 WALL SECTION

SCALE: 3/4" = 1'-0"

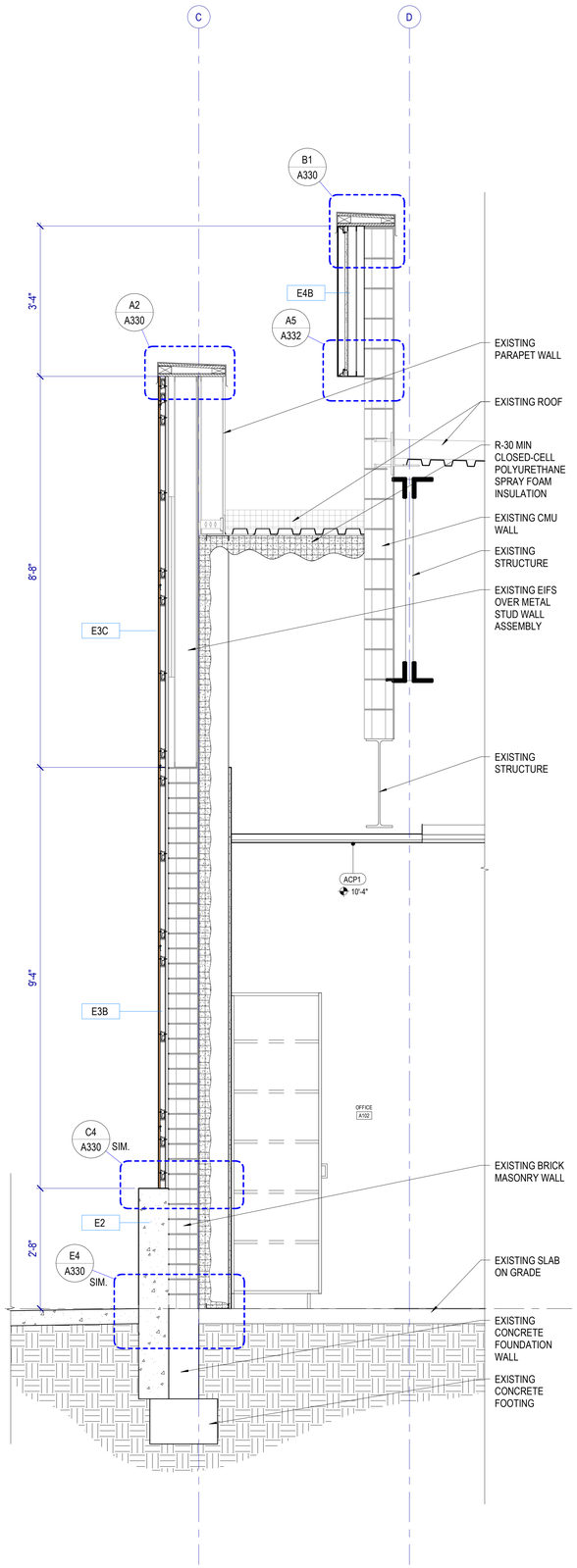

E3 WALL SECTION

SCALE: 3/4" = 1'-0"

MHTN ARCHITECTS

MHTN Architects, Inc.
280 South 400 West
Suite 250
Salt Lake City, Utah 84101
Telephone (801) 595-6700
www.mhtn.com

JORDAN SCHOOL DISTRICT

JORDAN LEARNING CENTER

3706 WEST 9800 SOUTH
SOUTH JORDAN, UT 84009

©2023 MHTN ARCHITECTS, INC.

Confidentiality Notice:
This document is intended for use on the Project identified herein by individuals and companies involved in the design, permitting, bidding and construction of the Project. MHTN Architects, Inc. grants limited rights to distribute and reproduce this document for such purposes. Any other distribution, copying or reproduction of this document for purposes other than those indicated is strictly prohibited. If a digital copy of this document is received in error, please delete it.

SEAL

STATE OF UTAH
CLIFFORD HOWARD CURTIS
No. 7394766-0301
24 AUGUST 2024
LICENSED ARCHITECT

MHTN PROJECT NO. 2024528

Original drawing is 30 x 42. Do not scale contents of this drawing.

REVISIONS
CONTRACTOR TO VERIFY DRAWINGS IN FIELD USE REFLECT LAST REVISION DATE.

NO.△	DATE	DESCRIPTION

ISSUE
CONSTRUCTION DOCUMENTS
AUGUST 29, 2024

SHEET NAME
WALL SECTIONS

SHEET NUMBER
A310

Autodesk Docs://2024528 JSD Retail Remodel/A24 2024528 JSD Retail Remodel.rvt
8/29/2024 7:51:44 AM

WALL SECTION GENERAL NOTES

RE: Structural for concrete slab on grade thickness.

RE: G400 for Exterior Wall, Floor and Roof Types.

Air Barrier: Seal penetrations through the air barrier per manufacturer's details.

Spray-Applied Fireproofing: Where spray-applied fireproofing is removed for attachment of walls, hangers, clip angles, etc., re-apply the fireproofing material to re-establish the required level of protection.

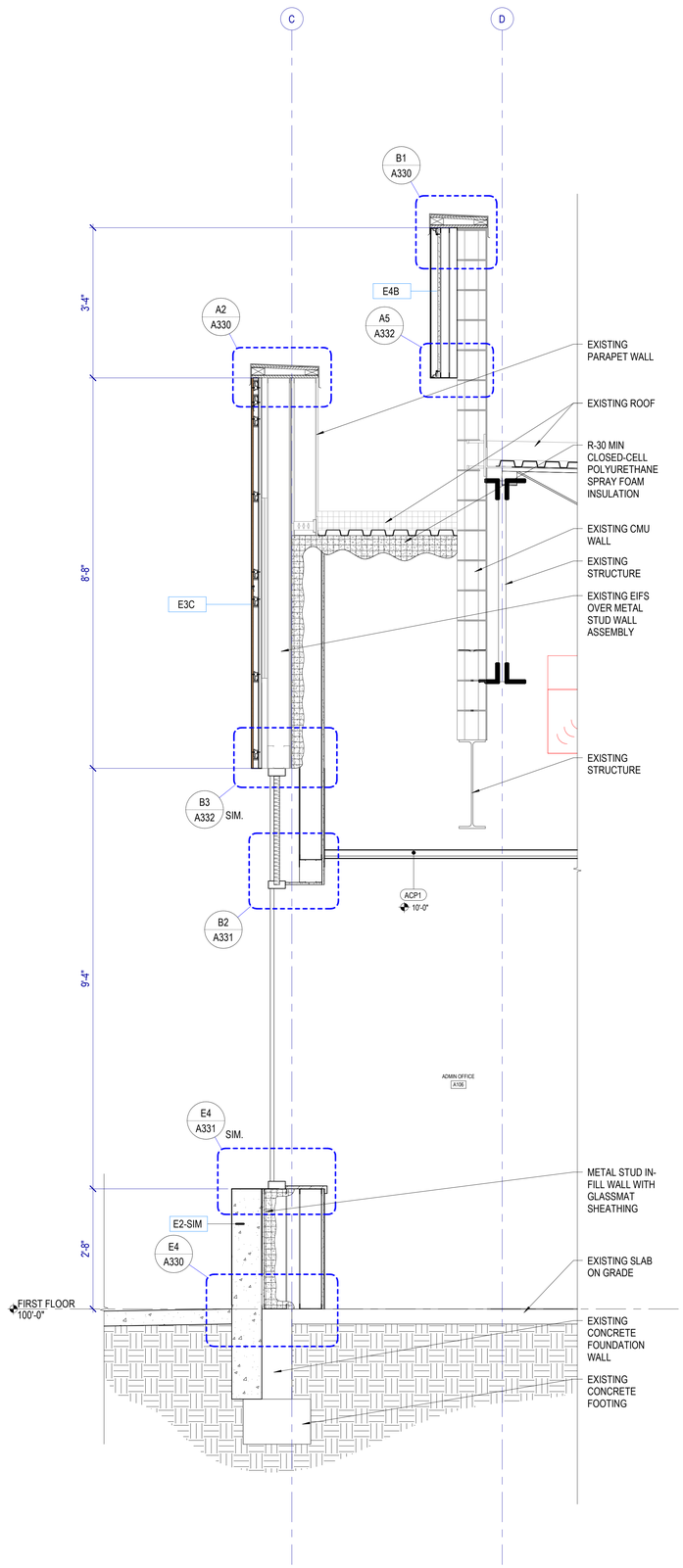

E1 WALL SECTION

SCALE: 3/4" = 1'-0"

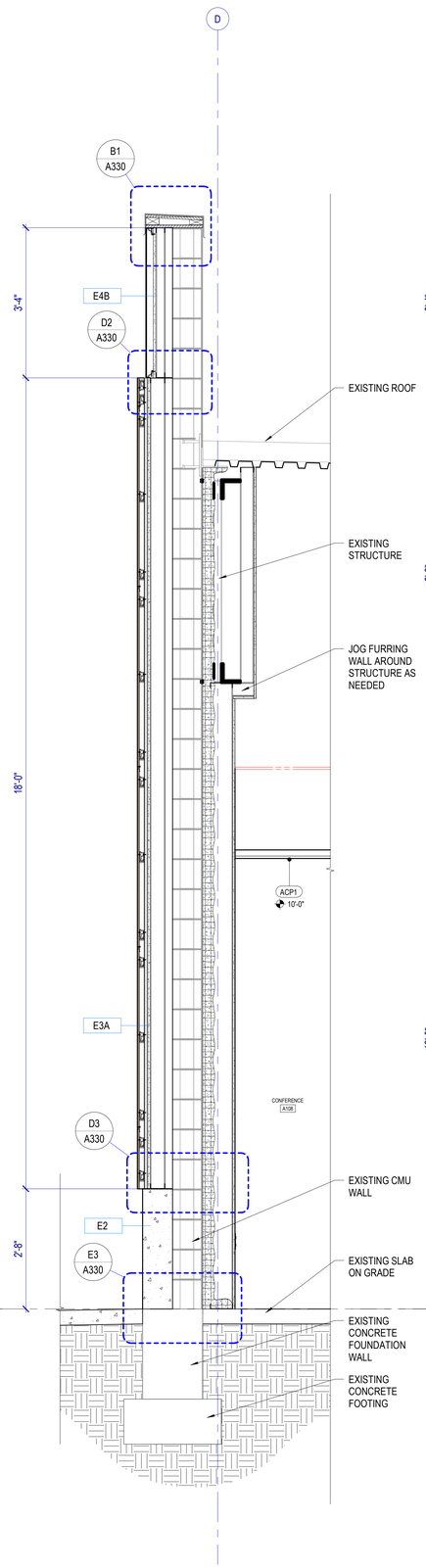

E3 WALL SECTION

SCALE: 3/4" = 1'-0"

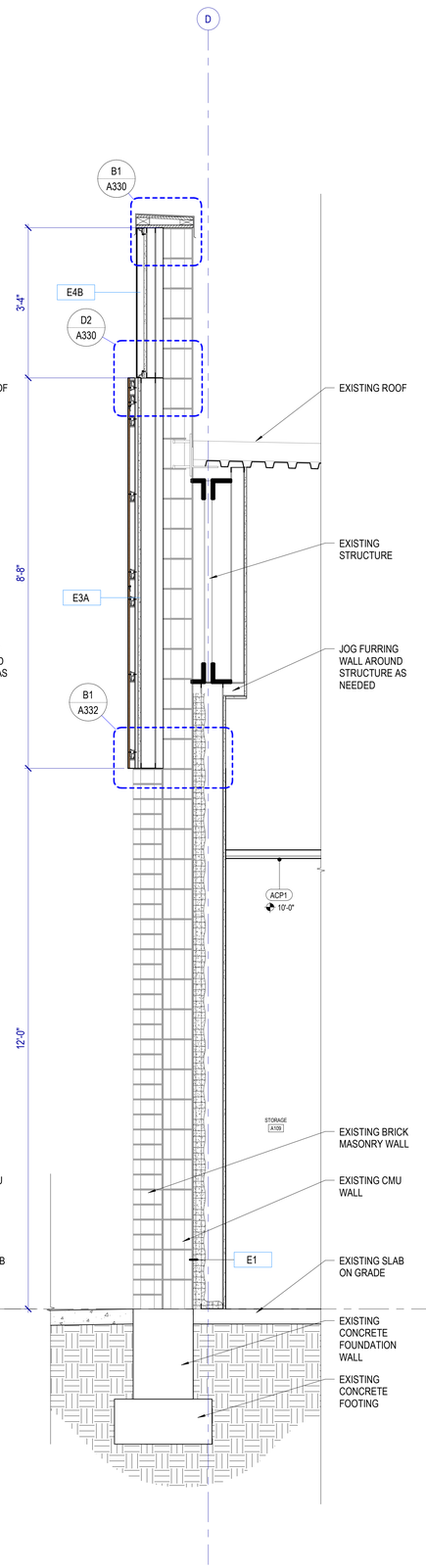

E4 WALL SECTION

SCALE: 3/4" = 1'-0"

MHTN ARCHITECTS

MHTN Architects, Inc.
280 South 400 West
Suite 250
Salt Lake City, Utah 84101
Telephone (801) 595-6700
www.mhtn.com

JORDAN SCHOOL DISTRICT

JORDAN LEARNING CENTER

3706 WEST 9800 SOUTH
SOUTH JORDAN, UT 84009

©2023 MHTN ARCHITECTS, INC.

Confidentiality Notice:
This document is intended for use on the Project identified herein by individuals and companies involved in the design, permitting, bidding and construction of the Project. MHTN Architects, Inc. grants limited rights to distribute and reproduce this document for this express purpose only. Distribution, printing or copying this document for purposes other than those indicated is strictly prohibited. If a digital copy of this document is received in error, please delete it.

SEAL

MHTN PROJECT NO. 2024528

Original drawing is 30 x 42. Do not scale contents of this drawing.

REVISIONS
CONTRACTOR TO VERIFY DRAWINGS IN FIELD USE REFLECT LAST REVISION DATE.

NO.△	DATE	DESCRIPTION

ISSUE
CONSTRUCTION DOCUMENTS
AUGUST 29, 2024

SHEET NAME
WALL SECTIONS

SHEET NUMBER
A311

Autodesk Docs://2024528 JSD Retail Remodel/A24 2024528 JSD Retail Remodel.rvt
8/28/2024 7:51:47 AM

WALL SECTION GENERAL NOTES

RE: Structural for concrete slab on grade thickness.

RE: G400 for Exterior Wall, Floor and Roof Types.

Air Barrier: Seal penetrations through the air barrier per manufacturer's details.

Spray-Applied Fireproofing: Where spray-applied fireproofing is removed for attachment of walls, hangers, clip angles, etc., re-apply the fireproofing material to re-establish the required level of protection.

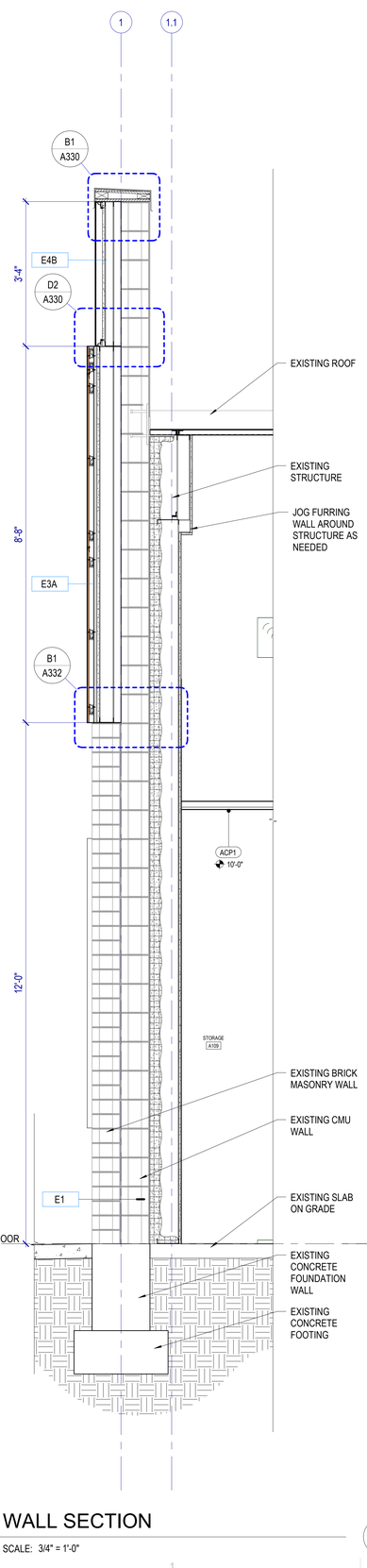

E1 WALL SECTION

SCALE: 3/4" = 1'-0"

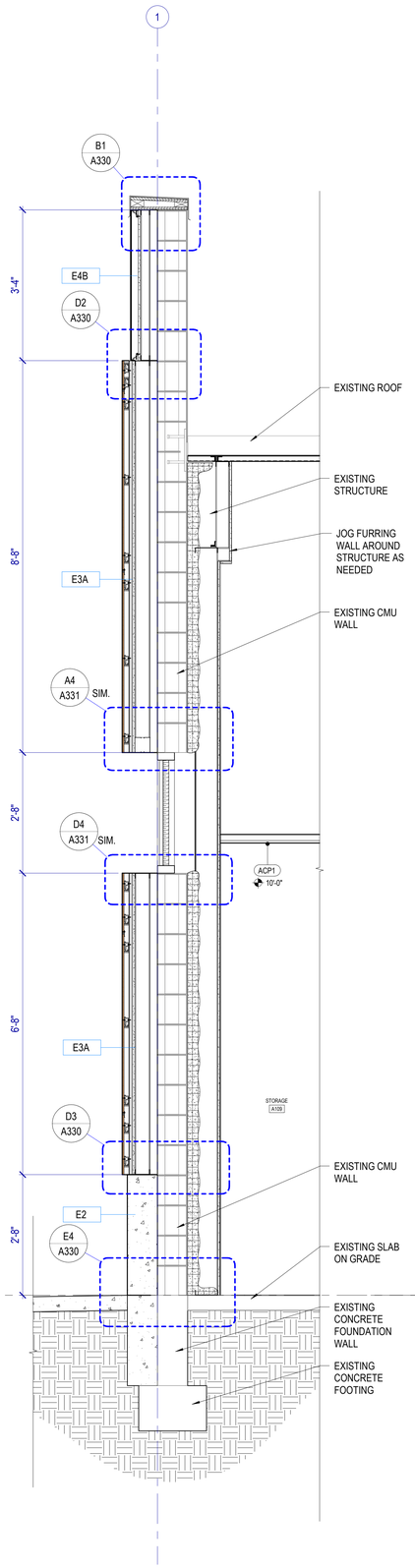

E2 WALL SECTION

SCALE: 3/4" = 1'-0"

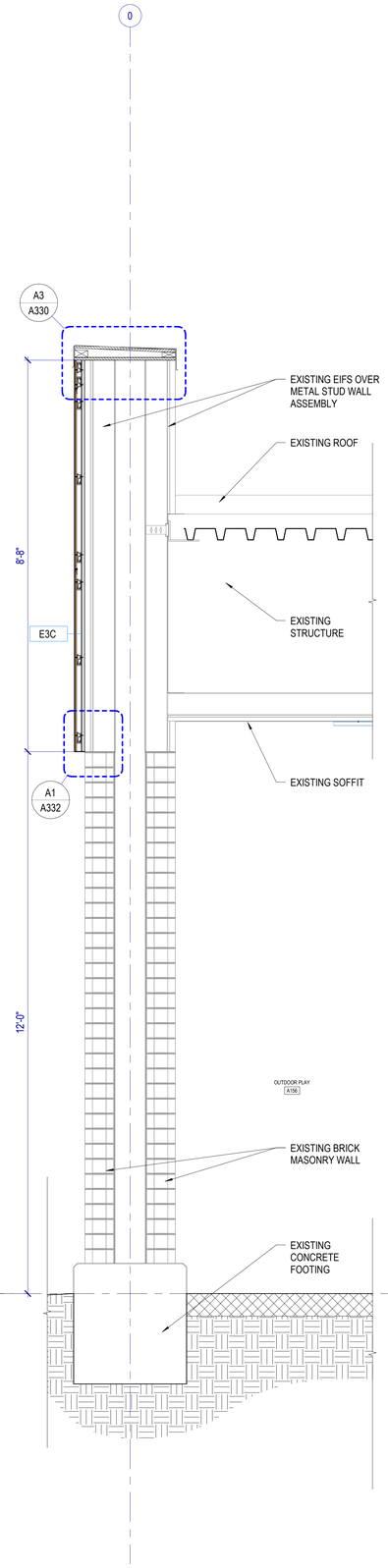

E3 WALL SECTION

SCALE: 3/4" = 1'-0"

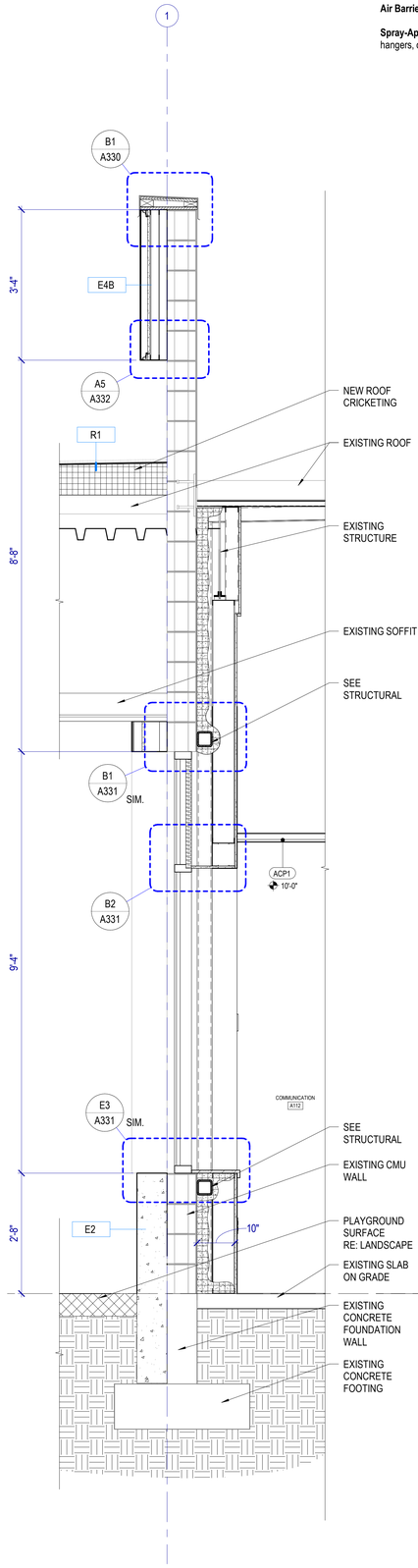

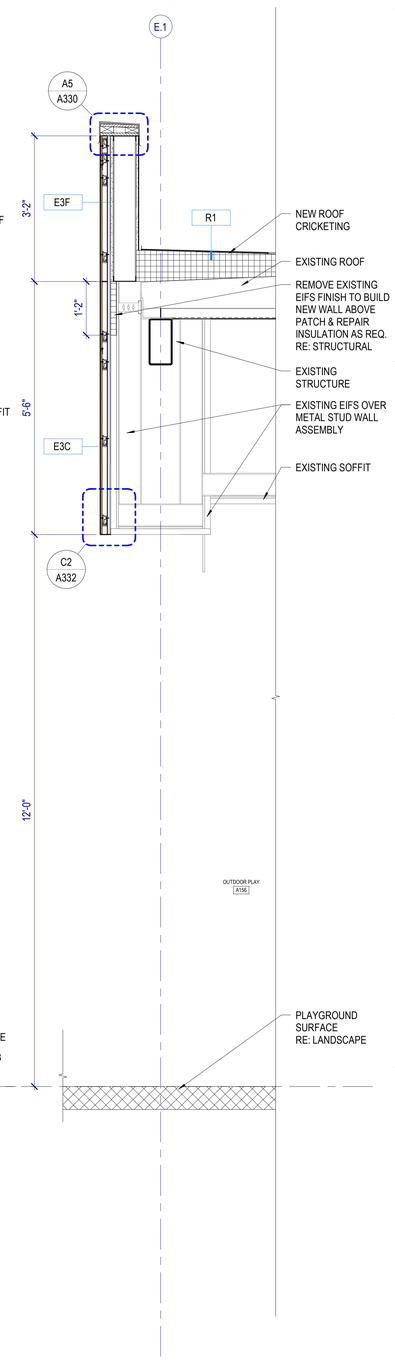

E5 WALL SECTION

SCALE: 3/4" = 1'-0"

MHTN ARCHITECTS

MHTN Architects, Inc.
280 South 400 West
Suite 250
Salt Lake City, Utah 84101
Telephone (801) 595-6700
www.mhtn.com

JORDAN SCHOOL DISTRICT

JORDAN LEARNING CENTER

3706 WEST 9800 SOUTH
SOUTH JORDAN, UT 84009

©2023 MHTN ARCHITECTS, INC.

Confidentiality Notice:
This document is intended for use on the Project identified herein by individuals and companies involved in the design, permitting, bidding and construction of the Project. MHTN Architects, Inc. grants limited rights to distribute and reproduce this document for this express purpose only. Distribution, printing or copying this document for purposes other than those indicated is strictly prohibited. If a digital copy of this document is received in error, please delete it.

SEAL

STATE OF UTAH
CLIFFORD HOWARD CURTIS
No. 7394786-0301
2/8 AUGUST 2024
REGISTERED ARCHITECT

MHTN PROJECT NO. 2024528

Original drawing is 30 x 42. Do not scale contents of this drawing.

REVISIONS
CONTRACTOR TO VERIFY DRAWINGS IN FIELD USE REFLECT LAST REVISION DATE.

NO.	DATE	DESCRIPTION

ISSUE
CONSTRUCTION DOCUMENTS
AUGUST 29, 2024

SHEET NAME
WALL SECTIONS

SHEET NUMBER
A312

Autodesk Docs://2024528 JSD Retail Remodel/A24 2024528 JSD Retail Remodel.rvt
8/28/2024 7:51:50 AM

WALL SECTION GENERAL NOTES

RE: Structural for concrete slab on grade thickness.

RE: G400 for Exterior Wall, Floor and Roof Types.

Air Barrier: Seal penetrations through the air barrier per manufacturer's details.

Spray-Applied Fireproofing: Where spray-applied fireproofing is removed for attachment of walls, hangers, clip angles, etc., re-apply the fireproofing material to re-establish the required level of protection.

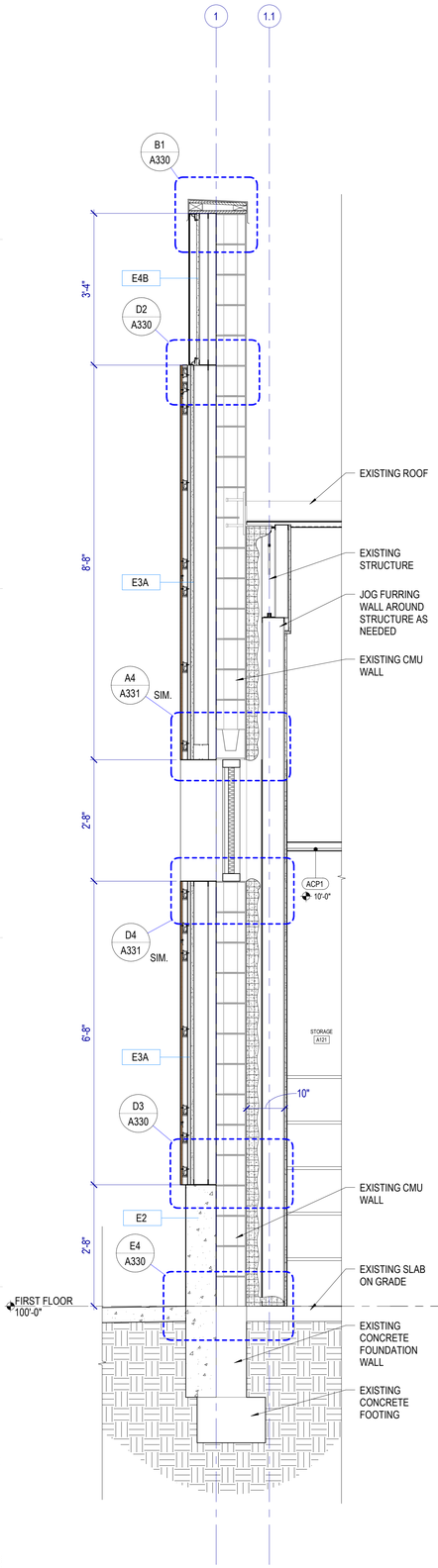

E1 WALL SECTION

SCALE: 3/4" = 1'-0"

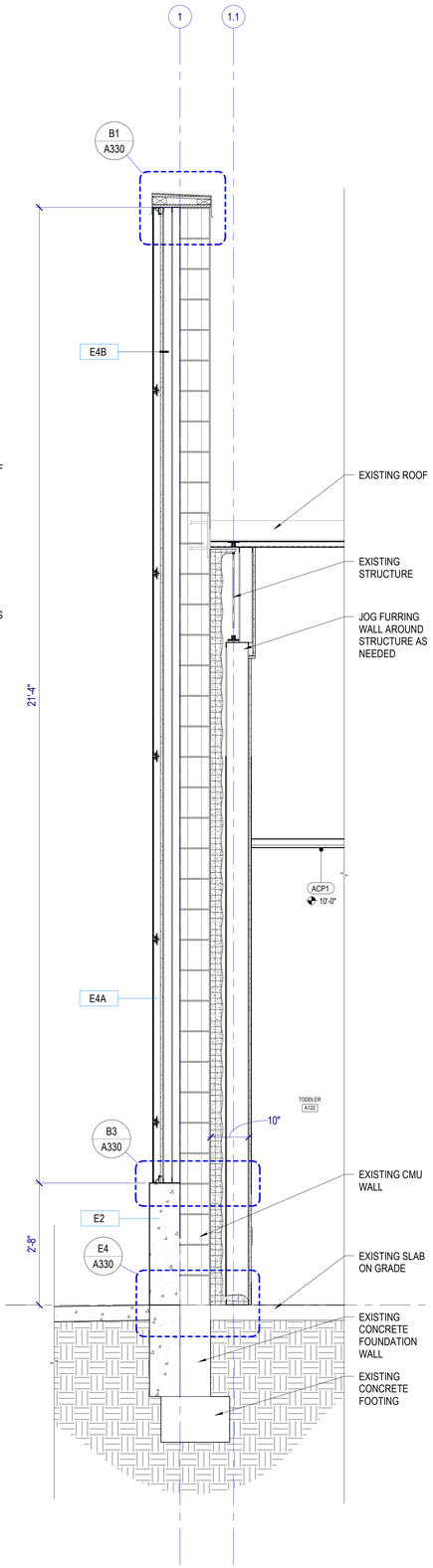

E2 WALL SECTION

SCALE: 3/4" = 1'-0"

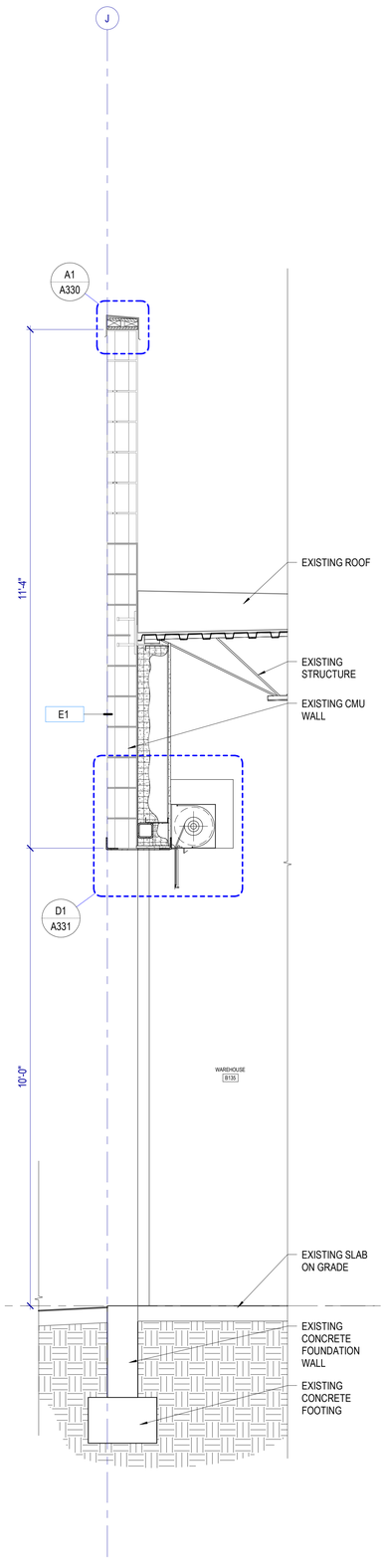

E3 WALL SECTION

SCALE: 3/4" = 1'-0"

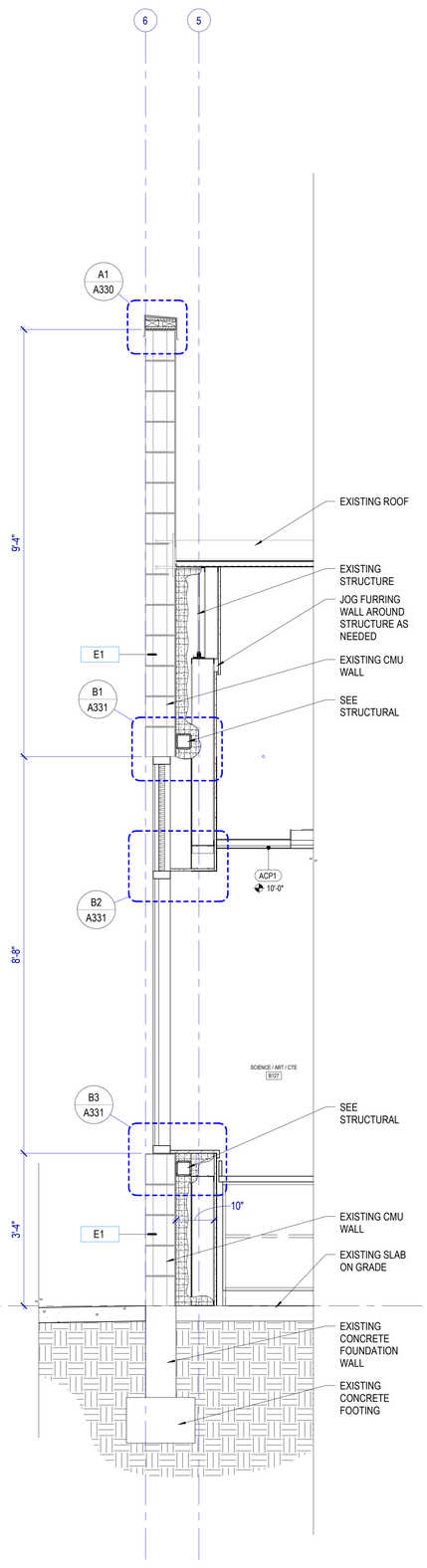

E4 WALL SECTION

SCALE: 3/4" = 1'-0"

MHTN ARCHITECTS

MHTN Architects, Inc.
280 South 400 West
Suite 250
Salt Lake City, Utah 84101
Telephone (801) 595-6700
www.mhtn.com

JORDAN SCHOOL DISTRICT

JORDAN LEARNING CENTER

3706 WEST 9800 SOUTH
SOUTH JORDAN, UT 84009

©2023 MHTN ARCHITECTS, INC.

Confidentiality Notice:
This document is intended for use on the Project identified herein by individuals and companies involved in the design, permitting, bidding and construction of the Project. MHTN Architects, Inc. grants limited rights to distribute and reproduce this document for this express purpose only. Distribution, printing or copying this document for purposes other than those indicated is strictly prohibited. If a digital copy of this document is received in error, please delete it.

SEAL

STATE OF UTAH
CLIFFORD HOWARD CURTIS
No. 7394786-0301
24 AUGUST 2024
LICENSED ARCHITECT

MHTN PROJECT NO. 2024528

Original drawing is 30 x 42. Do not scale contents of this drawing.

REVISIONS
CONTRACTOR TO VERIFY DRAWINGS IN FIELD. USE REFLECT LAST REVISION DATE.

NO.	DATE	DESCRIPTION

ISSUE
CONSTRUCTION DOCUMENTS
AUGUST 29, 2024

SHEET NAME
WALL SECTIONS

SHEET NUMBER
A313

Autodesk Docs://2024528 JSD Retail Remodel/A24 2024528 JSD Retail Remodel.rvt
8/28/2024 7:51:53 AM

WALL SECTION GENERAL NOTES

RE: Structural for concrete slab on grade thickness.

RE: G400 for Exterior Wall, Floor and Roof Types.

Air Barrier: Seal penetrations through the air barrier per manufacturer's details.

Spray-Applied Fireproofing: Where spray-applied fireproofing is removed for attachment of walls, hangers, clip angles, etc., re-apply the fireproofing material to re-establish the required level of protection.

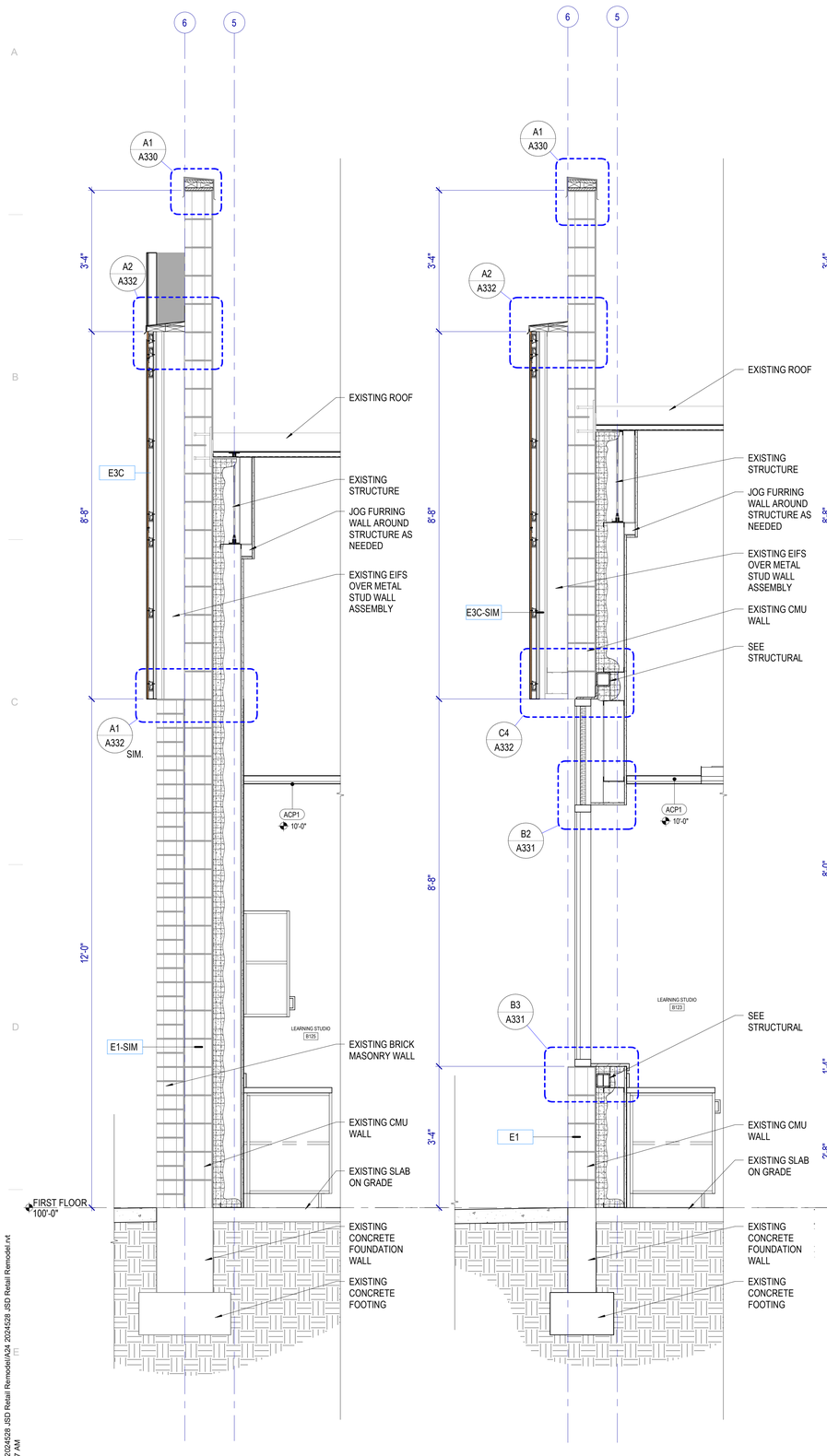

E1 WALL SECTION

SCALE: 3/4" = 1'-0"

E2 WALL SECTION

SCALE: 3/4" = 1'-0"

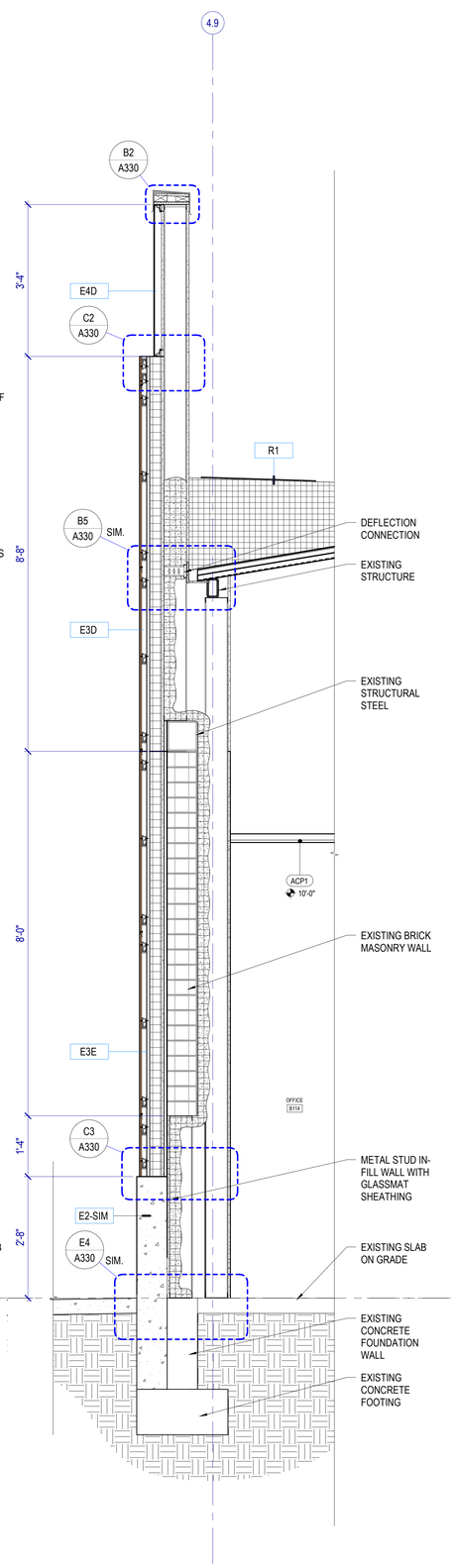

E3 WALL SECTION

SCALE: 3/4" = 1'-0"

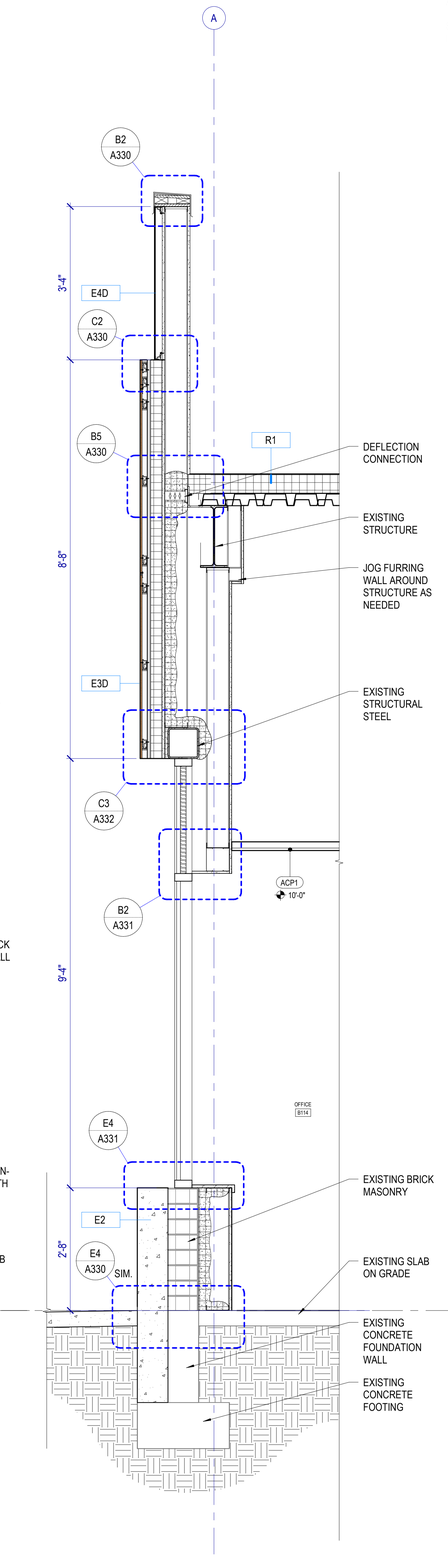

E4 WALL SECTION

SCALE: 3/4" = 1'-0"

MHTN ARCHITECTS

MHTN Architects, Inc.
280 South 400 West
Suite 250
Salt Lake City, Utah 84101
Telephone (801) 595-6700
www.mhtn.com

JORDAN SCHOOL DISTRICT

JORDAN LEARNING CENTER

3706 WEST 9800 SOUTH
SOUTH JORDAN, UT 84009

©2023 MHTN ARCHITECTS, INC.

Confidentiality Notice:
This document is intended for use on the Project identified herein by individuals and companies involved in the design, permitting, bidding and construction of the Project. MHTN Architects, Inc. grants limited rights to distribute and reproduce this document for this express purpose only. Distribution, printing or copying this document for purposes other than those indicated is strictly prohibited. If a digital copy of this document is received in error, please delete it.

SEAL

STATE OF UTAH
CLIFFORD HOWARD CURTIS
No. 7394786-0301
28 AUGUST 2024
LICENSED ARCHITECT

MHTN PROJECT NO. 2024528

Original drawing is 30 x 42. Do not scale contents of this drawing.

REVISIONS
CONTRACTOR TO VERIFY DRAWINGS IN FIELD. USE REFLECT LAST REVISION DATE.

NO.	DATE	DESCRIPTION

ISSUE
CONSTRUCTION DOCUMENTS
AUGUST 29, 2024

SHEET NAME
WALL SECTIONS

SHEET NUMBER
A314

Autodesk Docs://2024528 JSD Retail Remodel/A24 2024528 JSD Retail Remodel.rvt
8/28/2024 7:51:57 AM

WALL SECTION GENERAL NOTES

RE: Structural for concrete slab on grade thickness.

RE: G400 for Exterior Wall, Floor and Roof Types.

Air Barrier: Seal penetrations through the air barrier per manufacturer's details.

Spray-Applied Fireproofing: Where spray-applied fireproofing is removed for attachment of walls, hangers, clip angles, etc., re-apply the fireproofing material to re-establish the required level of protection.

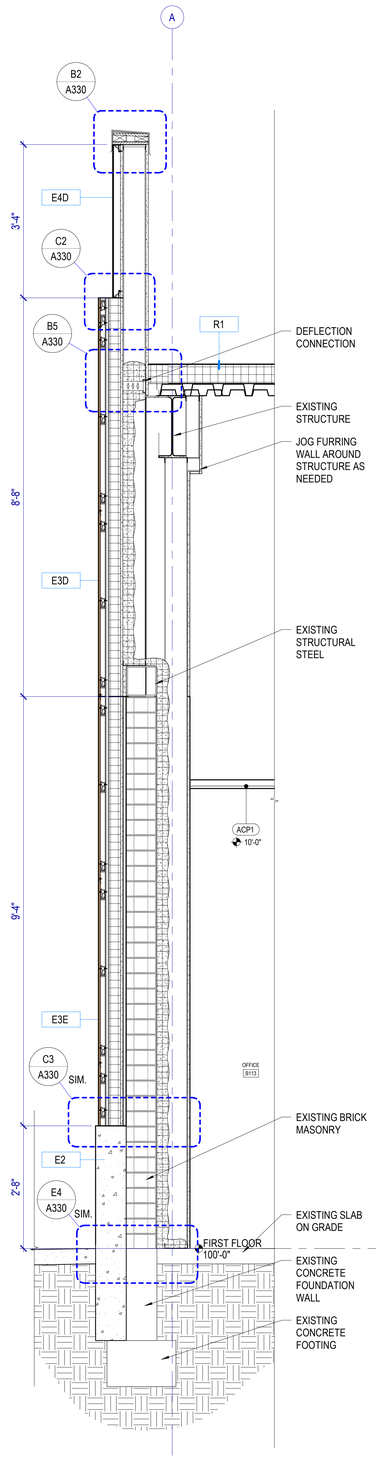

E1 WALL SECTION

SCALE: 3/4" = 1'-0"

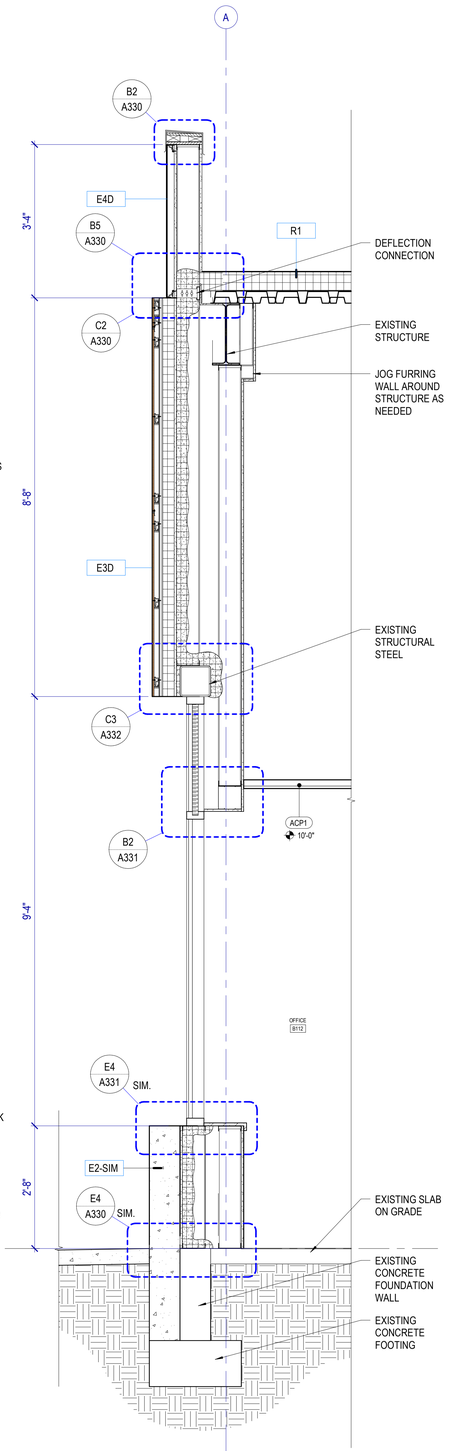

E2 WALL SECTION

SCALE: 3/4" = 1'-0"

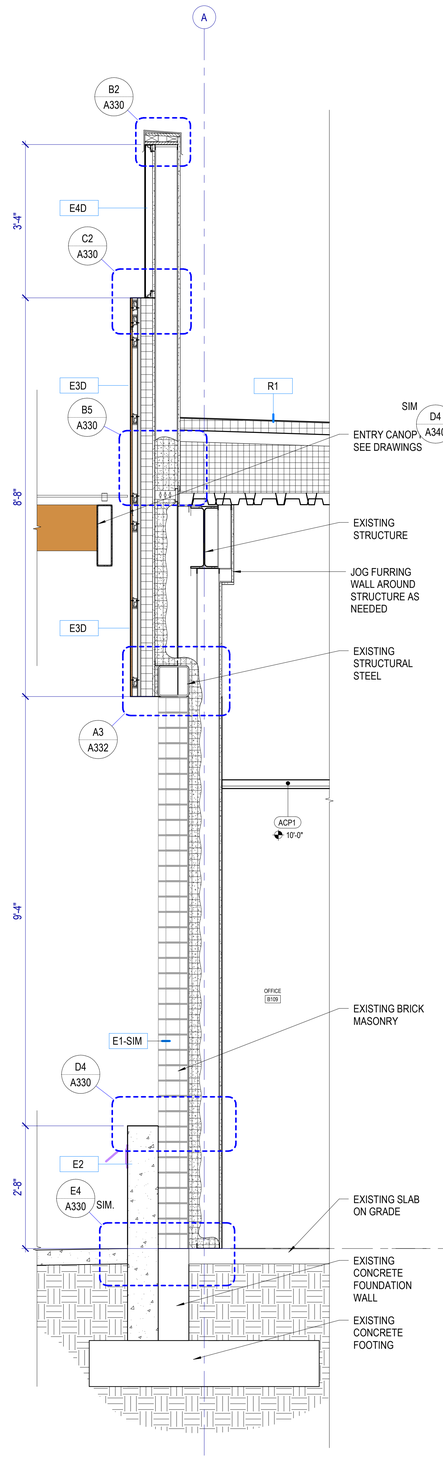

E3 WALL SECTION

SCALE: 3/4" = 1'-0"

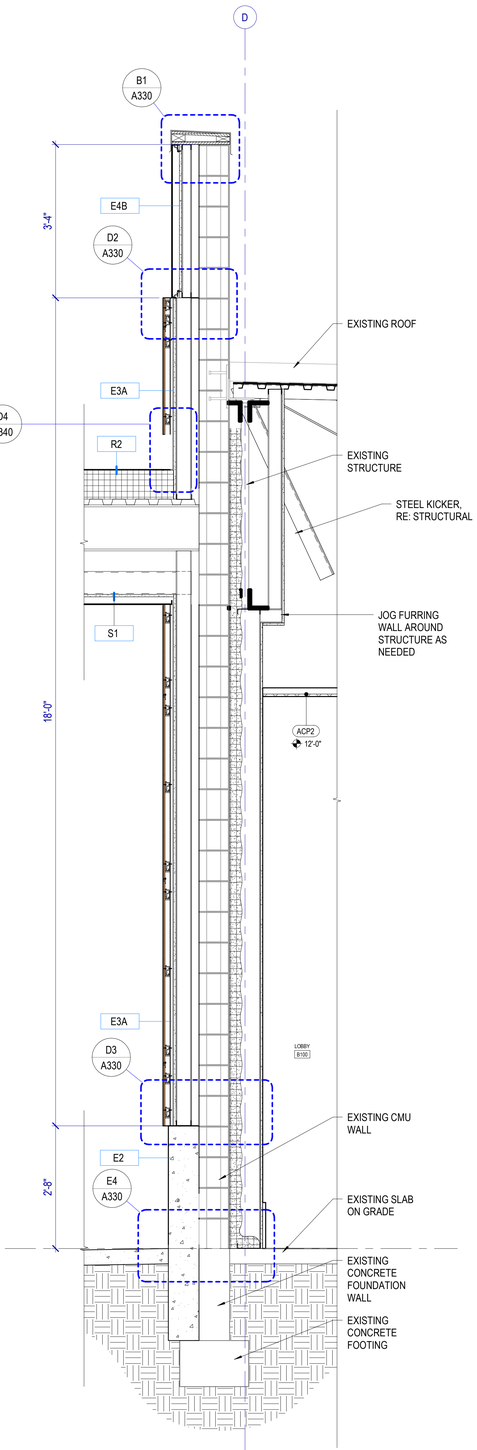

E4 WALL SECTION

SCALE: 3/4" = 1'-0"

MHTN ARCHITECTS

MHTN Architects, Inc.
280 South 400 West
Suite 250
Salt Lake City, Utah 84101
Telephone (801) 595-6700
www.mhtn.com

JORDAN SCHOOL DISTRICT

JORDAN LEARNING CENTER

3706 WEST 9800 SOUTH
SOUTH JORDAN, UT 84009

©2023 MHTN ARCHITECTS, INC.

Confidentiality Notice:
This document is intended for use on the Project identified herein by individuals and companies involved in the design, permitting, bidding and construction of the Project. MHTN Architects, Inc. grants limited rights to distribute and reproduce this document for this express purpose only. Distribution, printing or copying this document for purposes other than those indicated is strictly prohibited. If a digital copy of this document is received in error, please delete it.

SEAL

MHTN PROJECT NO. 2024528

Original drawing is 30 x 42. Do not scale contents of this drawing.

REVISIONS
CONTRACTOR TO VERIFY DRAWINGS IN FIELD. USE REFLECT LAST REVISION DATE.

NO.	DATE	DESCRIPTION

ISSUE
CONSTRUCTION DOCUMENTS
AUGUST 29, 2024

SHEET NAME
WALL SECTIONS

SHEET NUMBER
A315

Autodesk Docs://2024528 JSD Retail Remodel/A24 2024528 JSD Retail Remodel.rvt
8/28/2024 7:52:00 AM

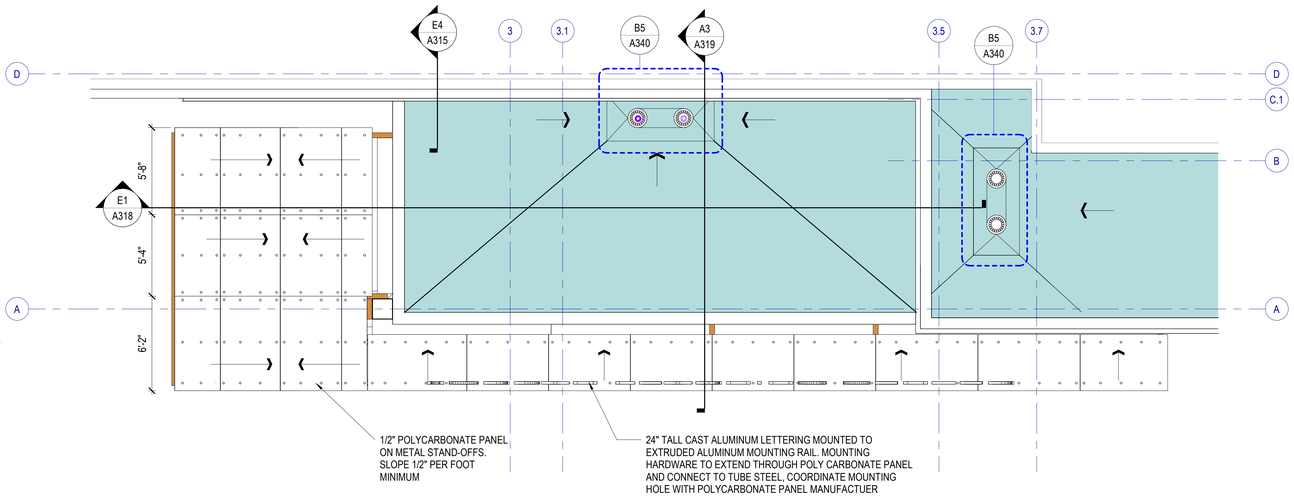

A1 ENTRY CANOPY ROOF

SCALE: 1/4" = 1'-0"

0 2' - 0" 4' - 0" 8' - 0"

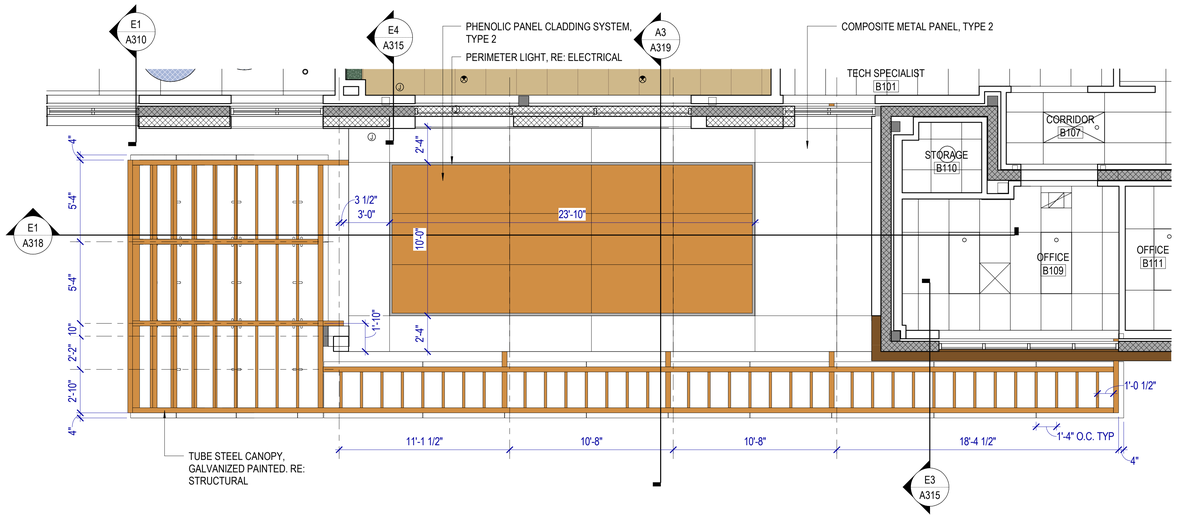

C1 ENTRY CANOPY REFLECTED CEILING PLAN

SCALE: 1/4" = 1'-0"

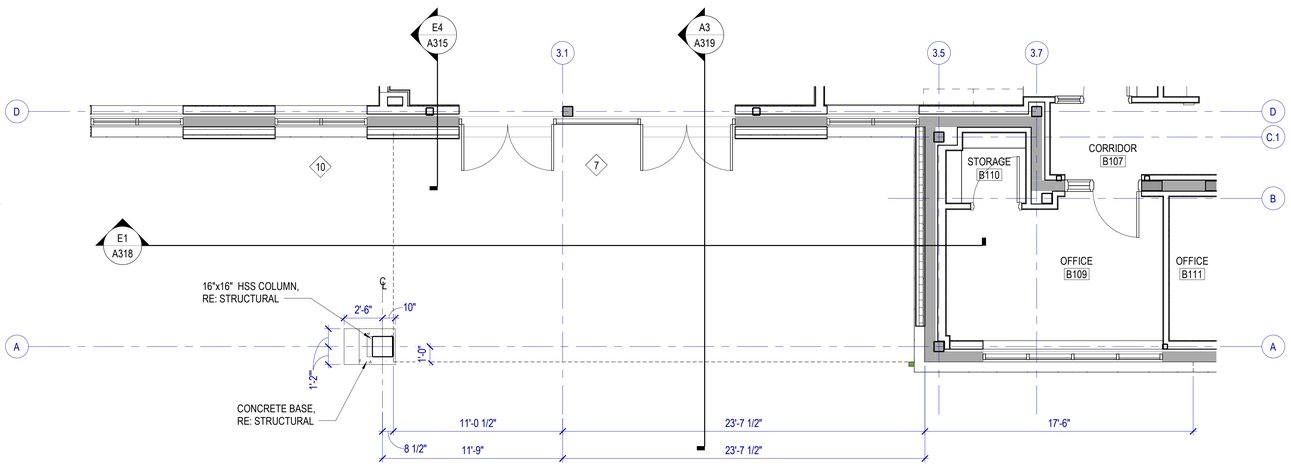

E1 ENTRY CANOPY FLOOR PLAN

SCALE: 1/4" = 1'-0"

0 2' - 0" 4' - 0" 8' - 0"

Autodesk Docs://2024528 JSD Retail Remodel/A24 2024528 JSD Retail Remodel.rvt
8/29/2024 7:52:03 AM

MHTN ARCHITECTS

MHTN Architects, Inc.
280 South 400 West
Suite 250
Salt Lake City, Utah 84101
Telephone (801) 595-6700
www.mhtn.com

JORDAN SCHOOL DISTRICT

JORDAN LEARNING CENTER

3706 WEST 9800 SOUTH
SOUTH JORDAN, UT 84009

©2023 MHTN ARCHITECTS, INC.

Confidentiality Notice:
This document is intended for use on the Project identified herein by individuals and companies involved in the design, permitting, bidding and construction of the Project. MHTN Architects, Inc. grants limited rights to distribute and reproduce this document for this express purpose only. Distribution, printing or copying this document for purposes other than those indicated is strictly prohibited. If a digital copy of this document is received in error, please delete it.

SEAL

STATE OF UTAH
CLIFFORD HOWARD CURTIS
No. 7394786-0301
24 AUGUST 2024
LICENSED ARCHITECT

MHTN PROJECT NO. 2024528

VIEW AND PRINT THIS DRAWING IN COLOR

Original drawing is 30 x 42. Do not scale contents of this drawing.

REVISIONS
CONTRACTOR TO VERIFY DRAWINGS IN FIELD USE REFLECT LAST REVISION DATE.

NO.	DATE	DESCRIPTION

ISSUE
CONSTRUCTION DOCUMENTS
AUGUST 29, 2024

SHEET NAME
ENTRY CANOPY

SHEET NUMBER
A316

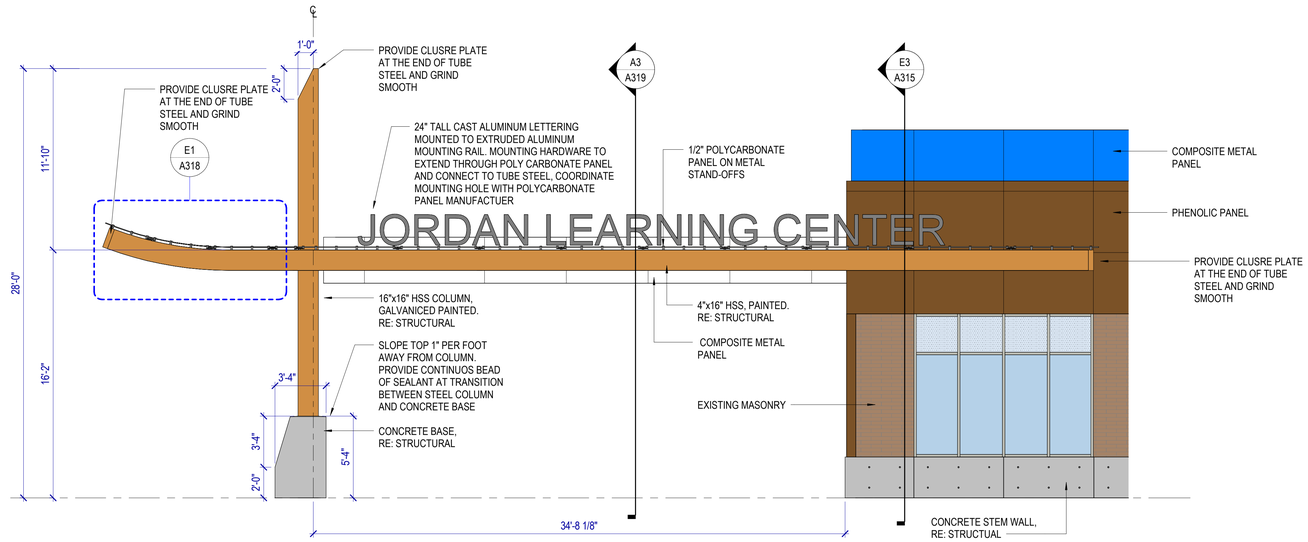

C1 ENTRY CANOPY ELEVATION

SCALE: 1/4" = 1'-0"

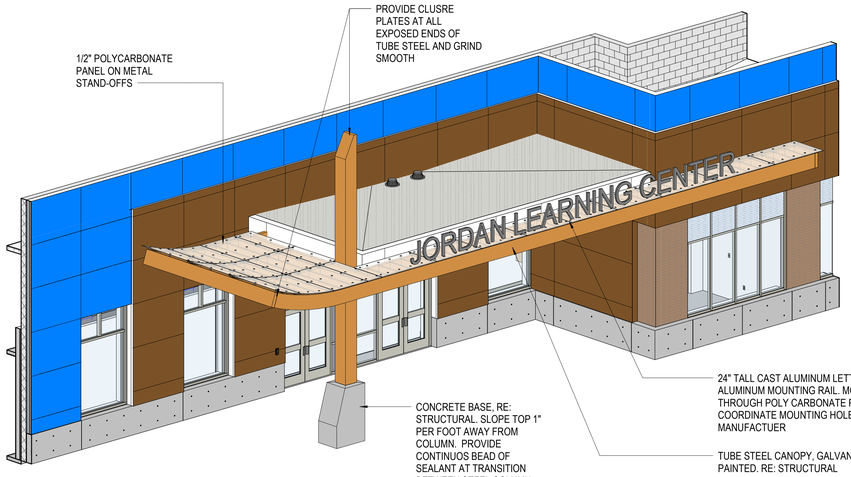

CANOPY AXONOMETRIC

MHTN ARCHITECTS
MHTN Architects, Inc.
280 South 400 West
Suite 250
Salt Lake City, Utah 84101
Telephone (801) 595-6700
www.mhtn.com

JORDAN SCHOOL DISTRICT

JORDAN LEARNING CENTER

3706 WEST 9800 SOUTH
SOUTH JORDAN, UT 84009

©2023 MHTN ARCHITECTS, INC.
Confidentiality Notice
This document is intended for use on the Project identified herein by individuals and companies involved in the design, permitting, bidding and construction of the Project. MHTN Architects, Inc. grants limited rights to distribute and reproduce this document for this express purpose only. Distribution, printing or copying this document for purposes other than those indicated is strictly prohibited. If a digital copy of this document is received in error, please delete it.

SEAL

STATE OF UTAH
CLIFFORD HOWARD CURTIS
No. 7394786-0301
24 AUGUST 2024
REGISTERED ARCHITECT

MHTN PROJECT NO. 2024528

VIEW AND PRINT THIS DRAWING IN COLOR

Original drawing is 30 x 42. Do not scale contents of this drawing.

REVISIONS
CONTRACTOR TO VERIFY DRAWINGS IN FIELD USE REFLECT LAST REVISION DATE.

NO.	DATE	DESCRIPTION

ISSUE
CONSTRUCTION DOCUMENTS
AUGUST 29, 2024

SHEET NAME
ENTRY CANOPY

SHEET NUMBER
A317

Autodesk Docs://2024528 JSD Retail Remodel/A24 2024528 JSD Retail Remodel.rvt
8/28/2024 7:52:09 AM

WALL SECTION GENERAL NOTES

RE: Structural for concrete slab on grade thickness.

RE: G400 for Exterior Wall, Floor and Roof Types.

Air Barrier: Seal penetrations through the air barrier per manufacturer's details.

Spray-Applied Fireproofing: Where spray-applied fireproofing is removed for attachment of walls, hangers, clip angles, etc., re-apply the fireproofing material to re-establish the required level of protection.

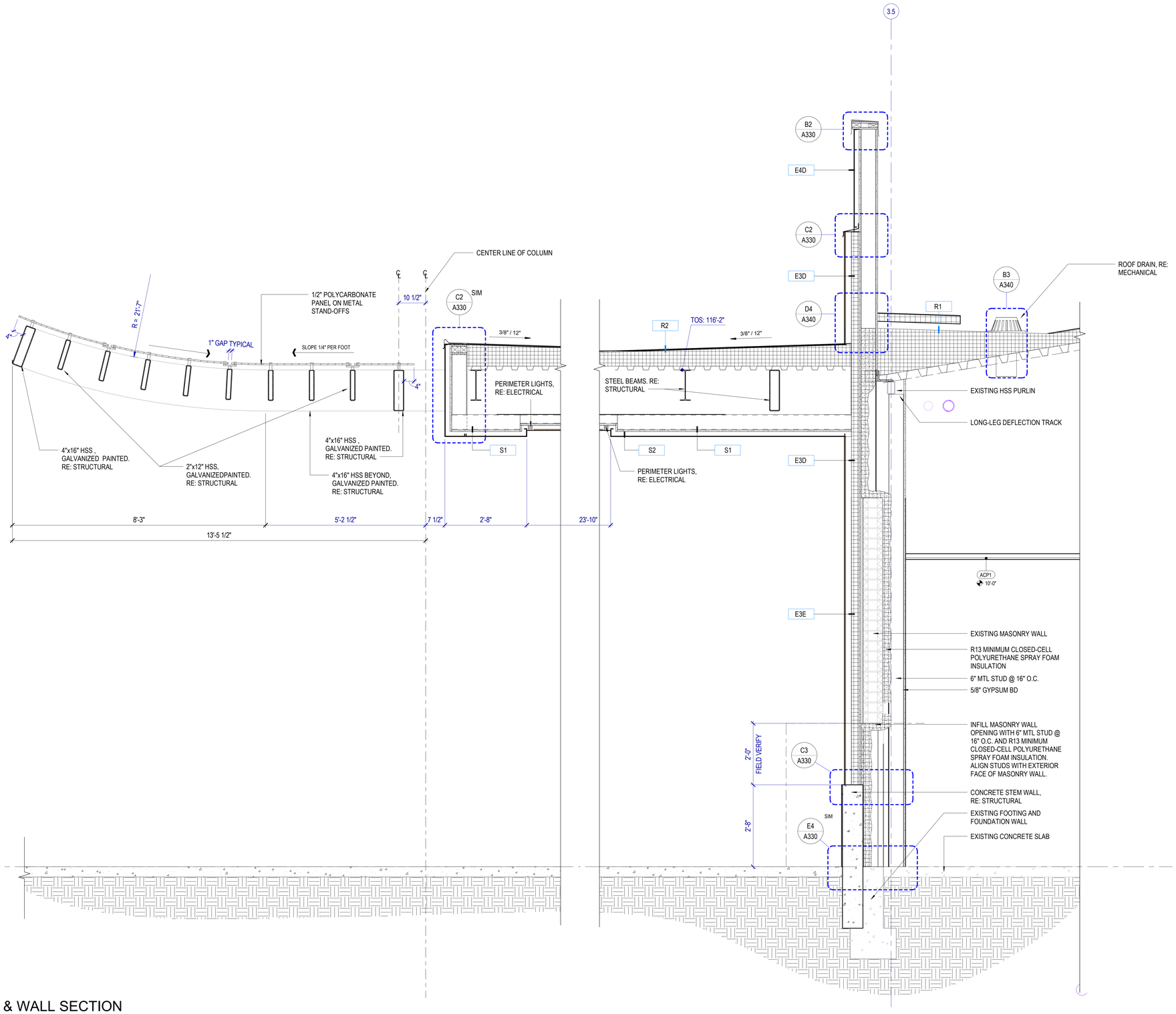

E1 CANOPY & WALL SECTION

SCALE: 3/4" = 1'-0"

MHTN ARCHITECTS

MHTN Architects, Inc.
280 South 400 West
Suite 250
Salt Lake City, Utah 84101
Telephone (801) 595-6700
www.mhtn.com

JORDAN SCHOOL DISTRICT

JORDAN LEARNING CENTER

3706 WEST 9800 SOUTH
SOUTH JORDAN, UT 84009

©2023 MHTN ARCHITECTS, INC.

Confidentiality Notice:
This document is intended for use on the Project identified herein by individuals and companies involved in the design, permitting, bidding and construction of the Project. MHTN Architects, Inc. grants limited rights to distribute and reproduce this document for this express purpose only. Distribution, printing or copying this document for purposes other than those indicated is strictly prohibited. If a digital copy of this document is received in error, please delete it.

SEAL

STATE OF UTAH
CLIFFORD HOWARD CURTIS
No. 7394786-0301
24 AUGUST 2024
LICENSED ARCHITECT

MHTN PROJECT NO. 2024528

VIEW AND PRINT THIS DRAWING IN COLOR

Original drawing is 30 x 42. Do not scale contents of this drawing.

REVISIONS
CONTRACTOR TO VERIFY DRAWINGS IN FIELD USE REFLECT LAST REVISION DATE.

NO.	DATE	DESCRIPTION

ISSUE
CONSTRUCTION DOCUMENTS
AUGUST 29, 2024

SHEET NAME
ENTRY CANOPY

SHEET NUMBER
A318

Autodesk Docs://2024528 JSD Retail Remodel/A24 2024528 JSD Retail Remodel.rvt
8/28/2024 7:52:10 AM

WALL SECTION GENERAL NOTES

RE: Structural for concrete slab on grade thickness.

RE: G400 for Exterior Wall, Floor and Roof Types.

Air Barrier: Seal penetrations through the air barrier per manufacturer's details.

Spray-Applied Fireproofing: Where spray-applied fireproofing is removed for attachment of walls, hangers, clip angles, etc., re-apply the fireproofing material to re-establish the required level of protection.

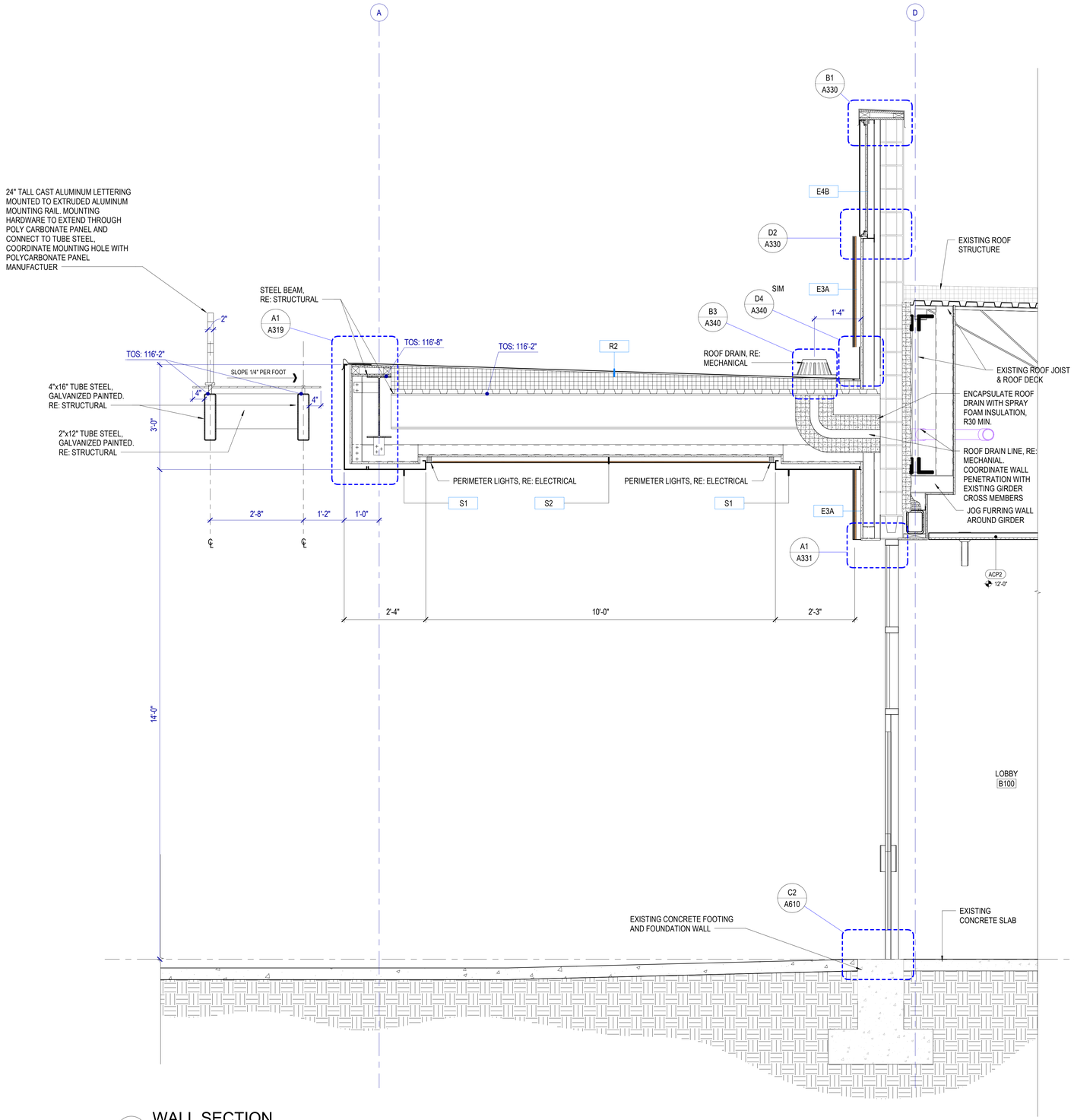

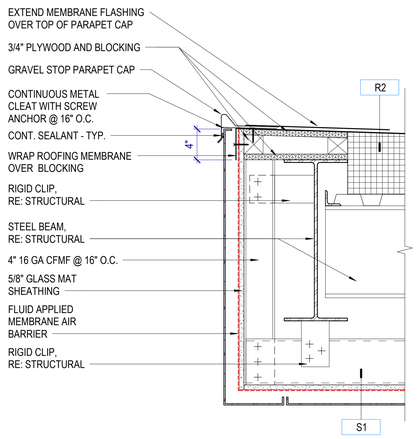

A1 GRAVEL STOP DETAIL

SCALE: 1 1/2" = 1'-0"

A3 WALL SECTION

SCALE: 3/4" = 1'-0"

MHTN ARCHITECTS

MHTN Architects, Inc.
280 South 400 West
Suite 250
Salt Lake City, Utah 84101
Telephone (801) 595-6700
www.mhtn.com

JORDAN SCHOOL DISTRICT

JORDAN LEARNING CENTER

3706 WEST 9800 SOUTH
SOUTH JORDAN, UT 84009

©2023 MHTN ARCHITECTS, INC.

Confidentiality Notice:
This document is intended for use on the Project identified herein by individuals and companies involved in the design, permitting, bidding and construction of the Project. MHTN Architects, Inc. grants limited rights to distribute and reproduce this document for this express purpose only. Distribution, printing or copying this document for purposes other than those indicated is strictly prohibited. If a digital copy of this document is received in error, please delete it.

SEAL

STATE OF UTAH
CLIFFORD HOWARD CURTIS
No. 7394786-0301
24 AUGUST 2024
LICENSED ARCHITECT

MHTN PROJECT NO. 2024528

VIEW AND PRINT THIS DRAWING IN COLOR

Original drawing is 30 x 42. Do not scale contents of this drawing.

REVISIONS
CONTRACTOR TO VERIFY DRAWINGS IN FIELD USE REFLECT LAST REVISION DATE.

NO.	DATE	DESCRIPTION

ISSUE
CONSTRUCTION DOCUMENTS
AUGUST 29, 2024

SHEET NAME
ENTRY CANOPY

SHEET NUMBER
A319

Autodesk Docs://2024528 JSD Retail Remodel/A24 2024528 JSD Retail Remodel.rvt
8/28/2024 7:52:12 AM

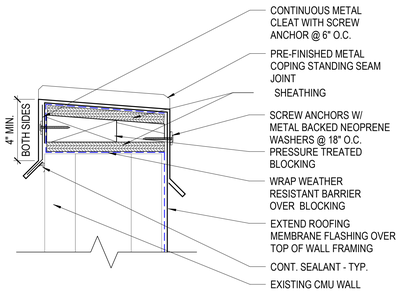

A1 PARAPET DETAIL

SCALE: 3" = 1'-0"

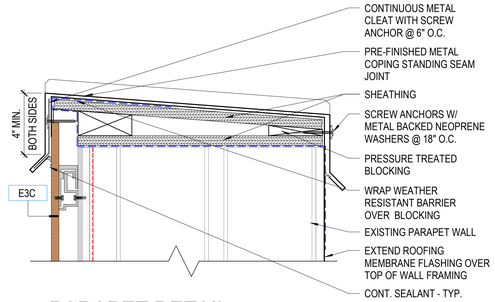

A2 PARAPET DETAIL

SCALE: 3" = 1'-0"

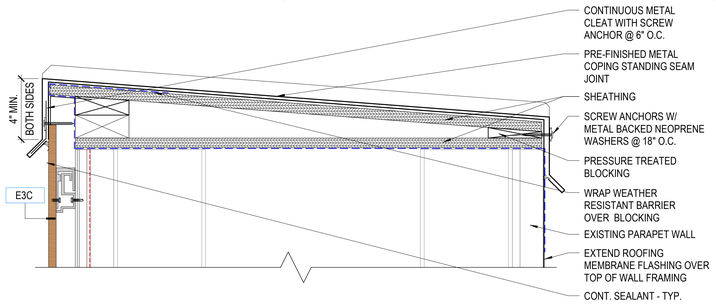

A3 PARAPET DETAIL

SCALE: 3" = 1'-0"

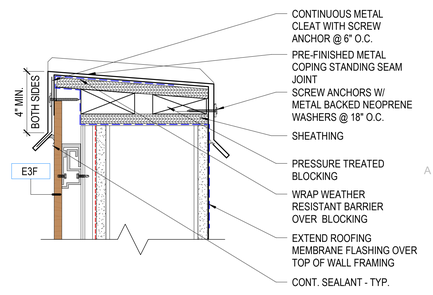

A5 PARAPET DETAIL

SCALE: 3" = 1'-0"

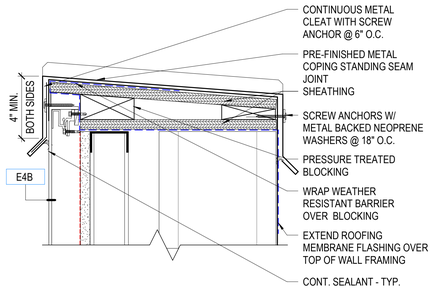

B1 PARAPET DETAIL

SCALE: 3" = 1'-0"

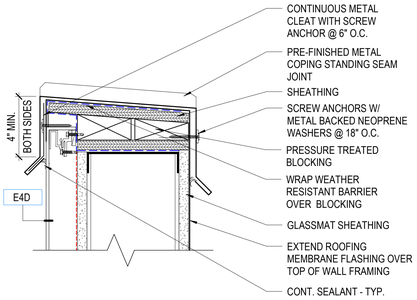

B2 PARAPET DETAIL

SCALE: 3" = 1'-0"

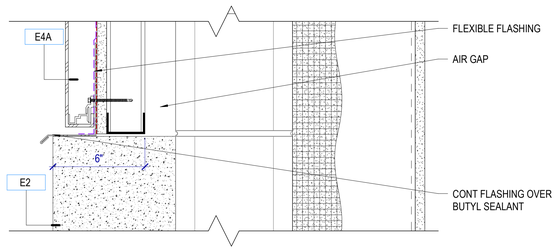

B3 MATERIAL TRANSITION DETAIL

SCALE: 3" = 1'-0"

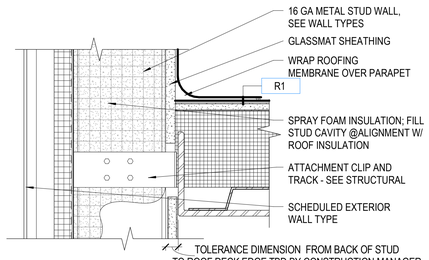

B5 ROOF CONNECTION DETAIL

SCALE: 3" = 1'-0"

C1 DOOR HEAD DETAIL

SCALE: 3" = 1'-0"

C2 MATERIAL TRANSITION DETAIL

SCALE: 3" = 1'-0"

C3 MATERIAL TRANSITION DETAIL

SCALE: 3" = 1'-0"

C4 MATERIAL TRANSITION DETAIL

SCALE: 3" = 1'-0"

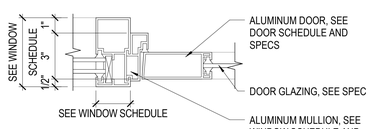

D1 DOOR JAMB DETAIL

SCALE: 3" = 1'-0"

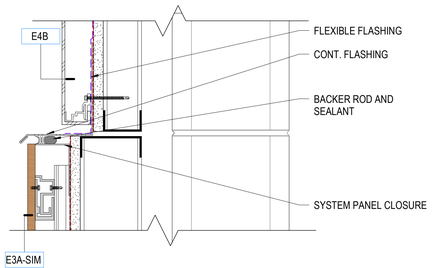

D2 MATERIAL TRANSITION DETAIL

SCALE: 3" = 1'-0"

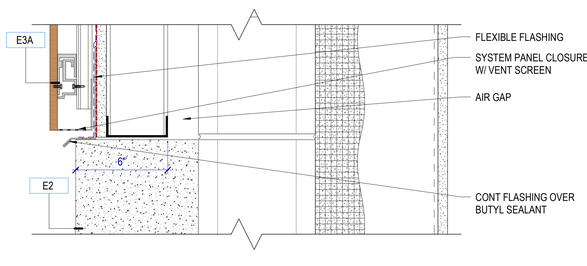

D3 MATERIAL TRANSITION DETAIL

SCALE: 3" = 1'-0"

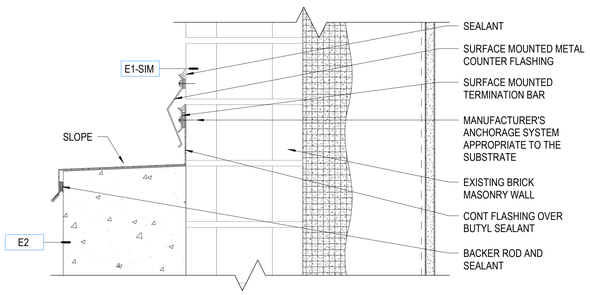

D4 MATERIAL TRANSITION DETAIL

SCALE: 3" = 1'-0"

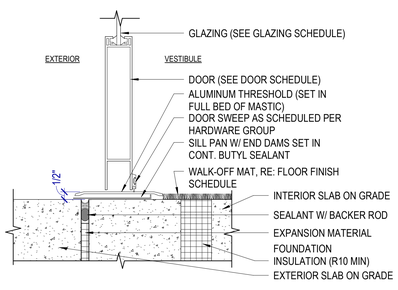

E1 THRESHOLD DETAIL

SCALE: 3" = 1'-0"

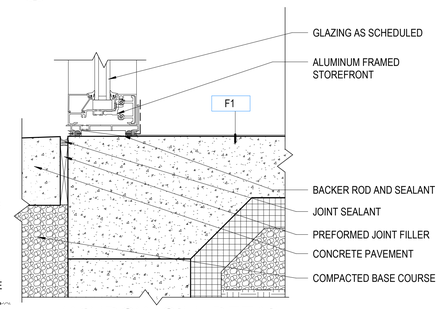

E2 WINDOW SILL DETAIL

SCALE: 3" = 1'-0"

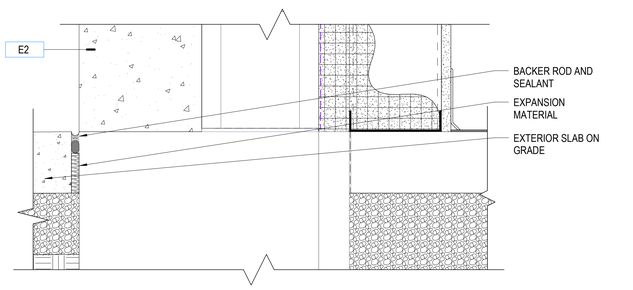

E3 FOUNDATION DETAIL

SCALE: 3" = 1'-0"

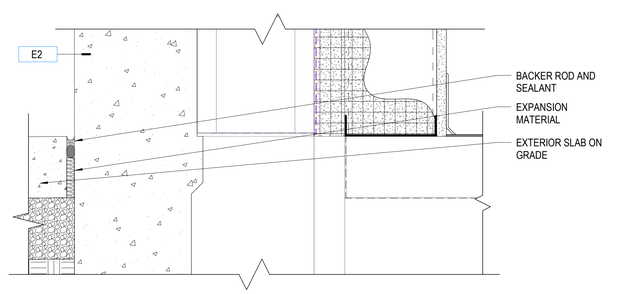

E4 FOUNDATION DETAIL

SCALE: 3" = 1'-0"

MHTN ARCHITECTS
MHTN Architects, Inc.
280 South 400 West
Suite 250
Salt Lake City, Utah 84101
Telephone (801) 595-6700
www.mhtn.com

JORDAN SCHOOL DISTRICT

JORDAN LEARNING CENTER

3706 WEST 9800 SOUTH
SOUTH JORDAN, UT 84009

©2023 MHTN ARCHITECTS, INC.
Confidentiality Notice:
This document is intended for use on the Project identified herein by individuals and companies involved in the design, permitting, bidding and construction of the Project. MHTN Architects, Inc. grants limited rights to distribute and reproduce this document for this express purpose only. Distribution, printing or copying this document for purposes other than those indicated is strictly prohibited. If a digital copy of this document is received in error, please delete it.

SEAL

STATE OF UTAH
CLIFFORD HOWARD CURTIS
No. 7394786-0301
28 AUGUST 2024
LICENSED ARCHITECT

MHTN PROJECT NO. 2024528

Original drawing is 30 x 42. Do not scale contents of this drawing.

REVISIONS
CONTRACTOR TO VERIFY DRAWINGS IN FIELD. USE REFLECT LAST REVISION DATE.

NO.	DATE	DESCRIPTION

ISSUE
CONSTRUCTION DOCUMENTS
AUGUST 29, 2024

SHEET NAME
ENVELOPE DETAILS

SHEET NUMBER
A330

Autodesk Docs://2024528 JSD Retail Remodel/A24 2024528 JSD Retail Remodel.rvt
8/28/2024 7:52:14 AM

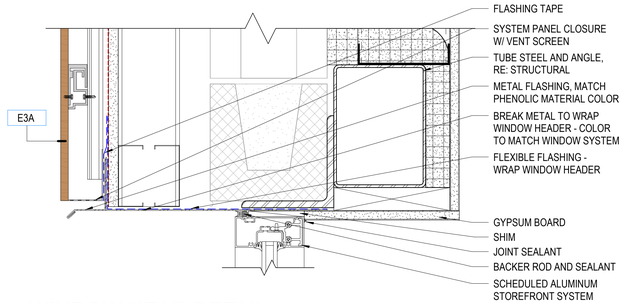

A1 WINDOW HEAD DETAIL

SCALE: 3" = 1'-0"

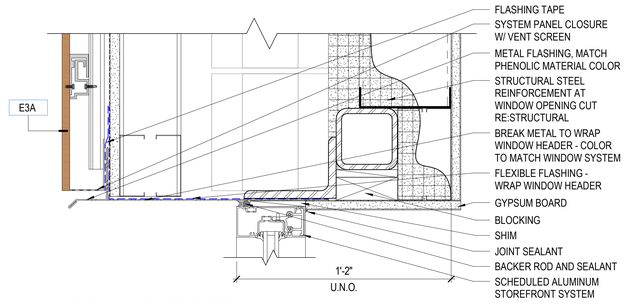

A3 WINDOW HEAD DETAIL

SCALE: 3" = 1'-0"

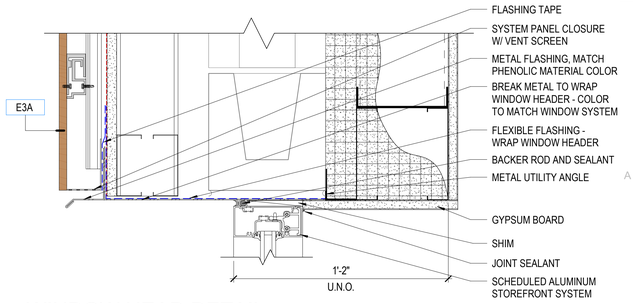

A4 WINDOW HEAD DETAIL

SCALE: 3" = 1'-0"

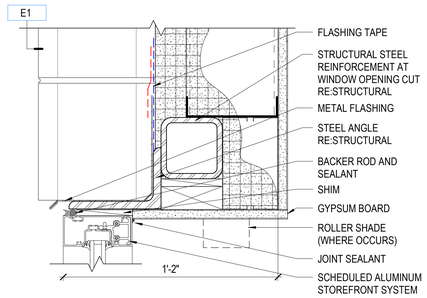

B1 WINDOW HEAD DETAIL

SCALE: 3" = 1'-0"

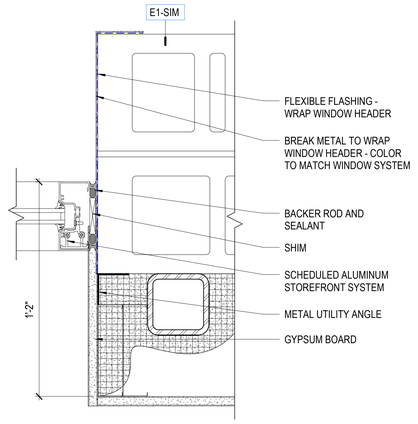

C2 WINDOW JAMB DETAIL

SCALE: 3" = 1'-0"

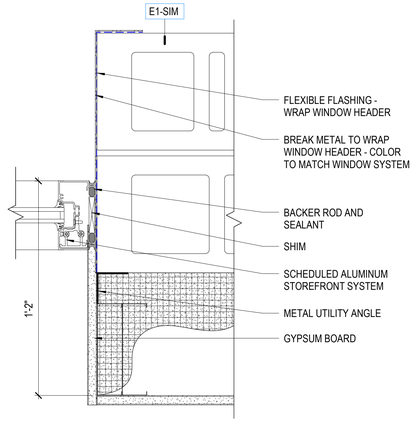

C3 WINDOW JAMB DETAIL

SCALE: 3" = 1'-0"

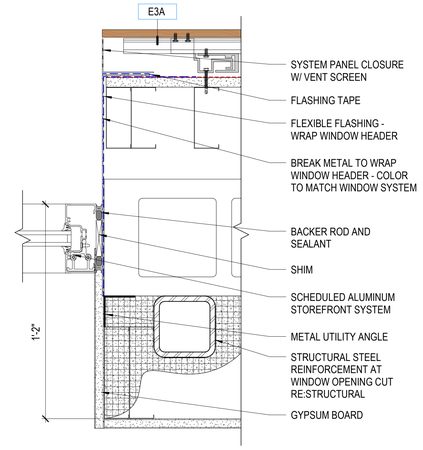

C4 WINDOW JAMB DETAIL

SCALE: 3" = 1'-0"

C5 WINDOW JAMB DETAIL

SCALE: 3" = 1'-0"

D1 DOOR HEAD DETAIL

SCALE: 1 1/2" = 1'-0"

B2 SPANDREL DETAIL

SCALE: 3" = 1'-0"

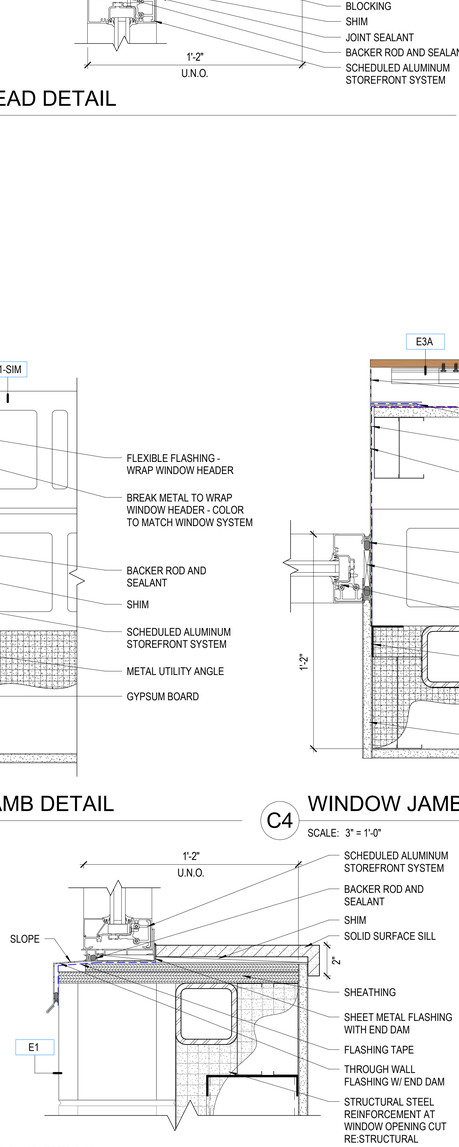

B3 WINDOW SILL DETAIL

SCALE: 3" = 1'-0"

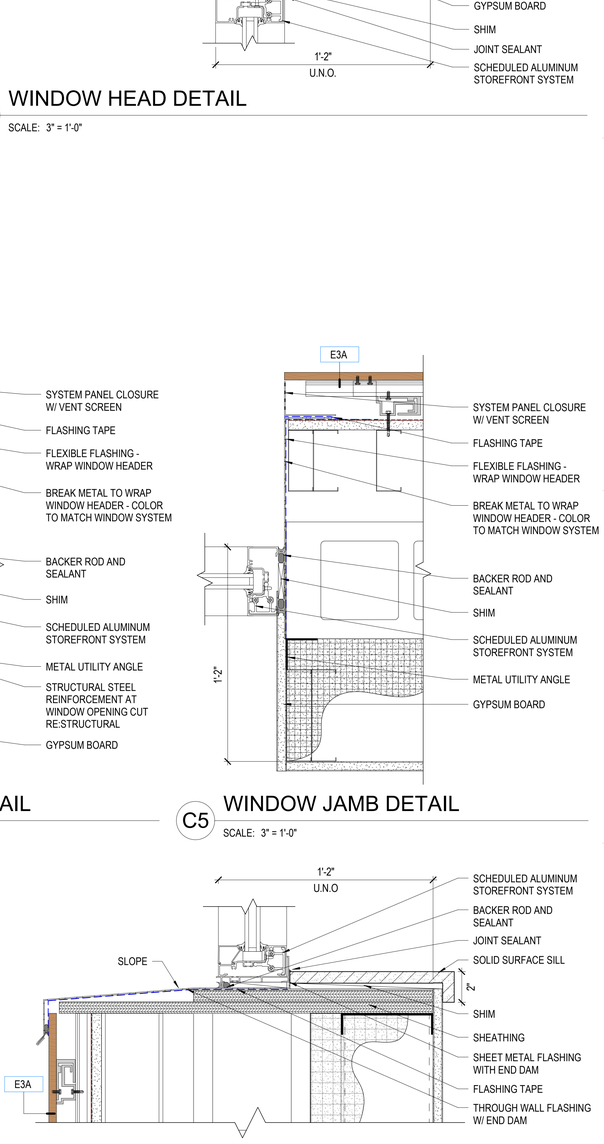

D4 WINDOW SILL DETAIL

SCALE: 3" = 1'-0"

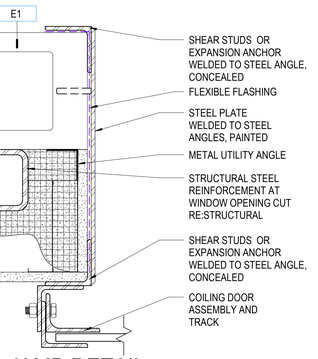

E1 DOOR JAMB DETAIL

SCALE: 3" = 1'-0"

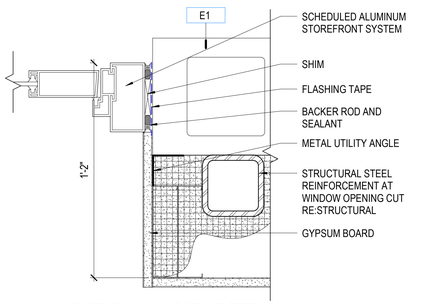

E2 WINDOW JAMB DETAIL

SCALE: 3" = 1'-0"

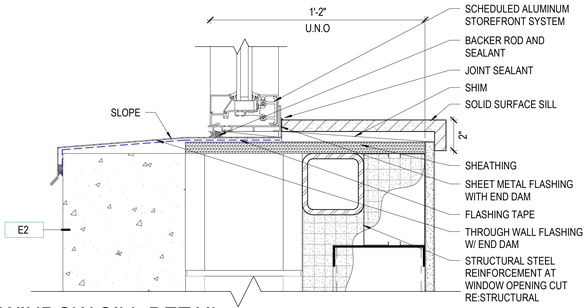

E3 WINDOW SILL DETAIL

SCALE: 3" = 1'-0"

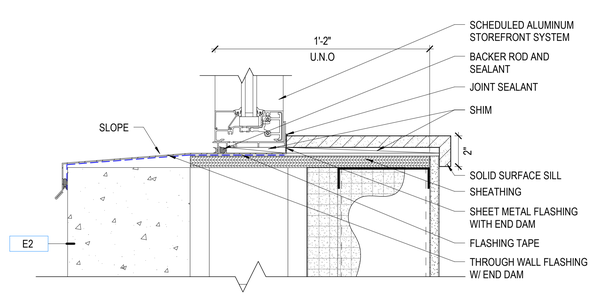

E4 WINDOW SILL DETAIL

SCALE: 3" = 1'-0"

MHTN ARCHITECTS
MHTN Architects, Inc.
280 South 400 West
Suite 250
Salt Lake City, Utah 84101
Telephone (801) 595-6700
www.mhtn.com

JORDAN SCHOOL DISTRICT

JORDAN LEARNING CENTER

3706 WEST 9800 SOUTH
SOUTH JORDAN, UT 84009

©2023 MHTN ARCHITECTS, INC.
Confidentiality Notice:
This document is intended for use on the Project identified herein by individuals and companies involved in the design, permitting, bidding and construction of the Project. MHTN Architects, Inc. grants limited rights for use and reproduction of this document for this purpose only. Distribution, printing or copying this document for purposes other than those indicated is strictly prohibited. If a digital copy of this document is received in error, please delete it.

SEAL

STATE OF UTAH
CLIFFORD HOWARD CURTIS
No. 7394786-0301
2/4 AUGUST 2024
LICENSED ARCHITECT

MHTN PROJECT NO. 2024528

Original drawing is 30 x 42. Do not scale contents of this drawing.

REVISIONS
CONTRACTOR TO VERIFY DRAWINGS IN FIELD USE REFLECT LAST REVISION DATE.

NO.	DATE	DESCRIPTION

ISSUE
CONSTRUCTION DOCUMENTS
AUGUST 29, 2024

SHEET NAME
ENVELOPE DETAILS

SHEET NUMBER
A331

Autodesk Docs://2024528 JSD Retail Remodel/A24 2024528 JSD Retail Remodel.rvt
8/28/2024 7:02:16 AM

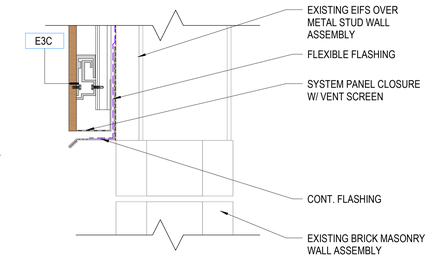

A1 MATERIAL TRANSITION DETAIL

SCALE: 3" = 1'-0"

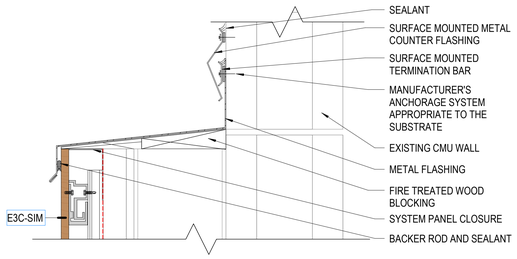

A2 MATERIAL TRANSITION DETAIL

SCALE: 3" = 1'-0"

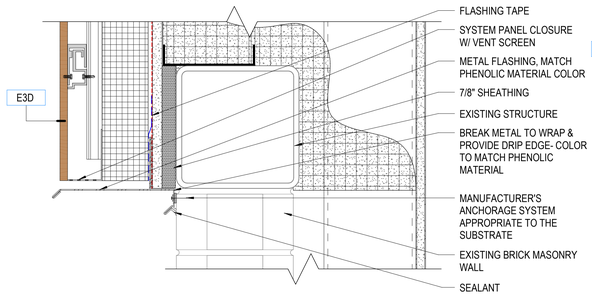

A3 MATERIAL TRANSITION DETAIL

SCALE: 3" = 1'-0"

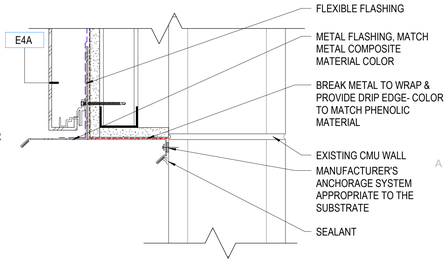

A5 MATERIAL TRANSITION DETAIL

SCALE: 3" = 1'-0"

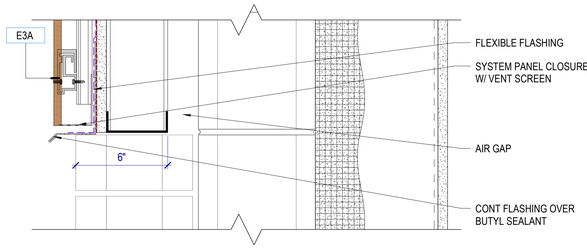

B1 MATERIAL TRANSITION DETAIL

SCALE: 3" = 1'-0"

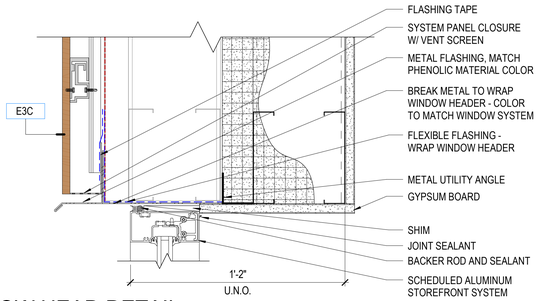

B3 WINDOW HEAD DETAIL

SCALE: 3" = 1'-0"

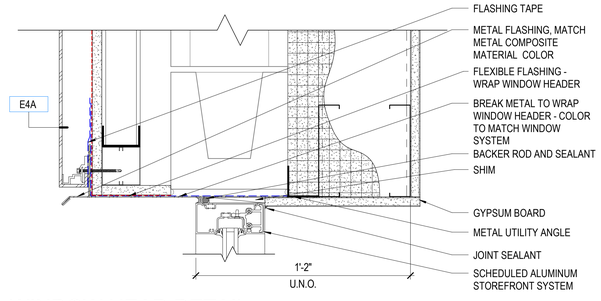

B4 WINDOW HEAD DETAIL

SCALE: 3" = 1'-0"

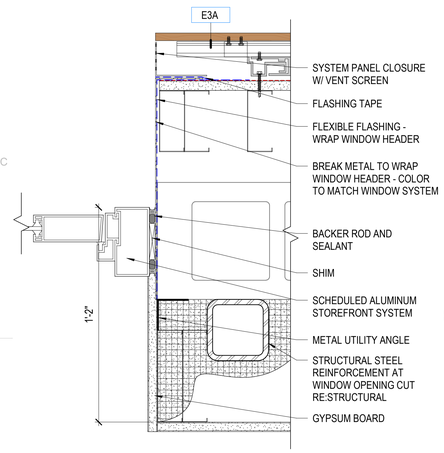

D1 WINDOW JAMB DETAIL

SCALE: 3" = 1'-0"

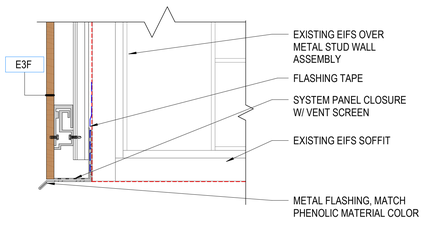

C2 MATERIAL TRANSITION DETAIL

SCALE: 3" = 1'-0"

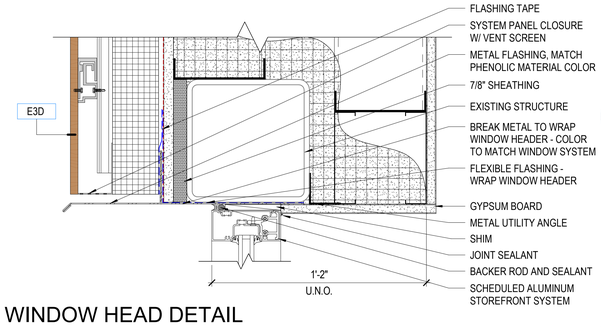

C3 WINDOW HEAD DETAIL

SCALE: 3" = 1'-0"

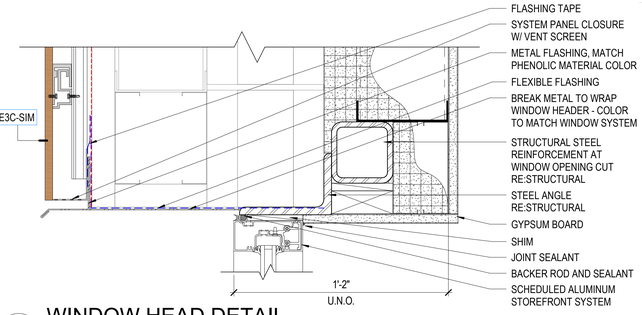

C4 WINDOW HEAD DETAIL

SCALE: 3" = 1'-0"

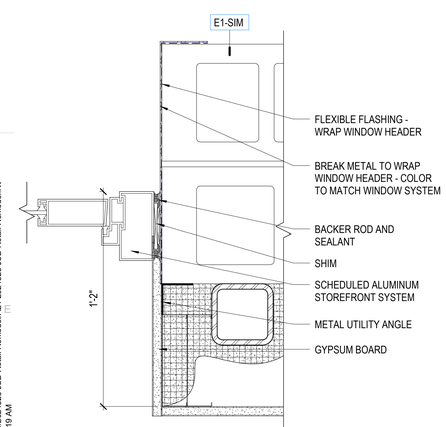

E1 WINDOW JAMB DETAIL

SCALE: 3" = 1'-0"

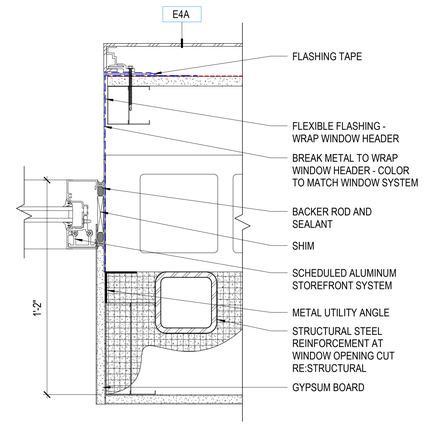

E2 WINDOW JAMB DETAIL

SCALE: 3" = 1'-0"

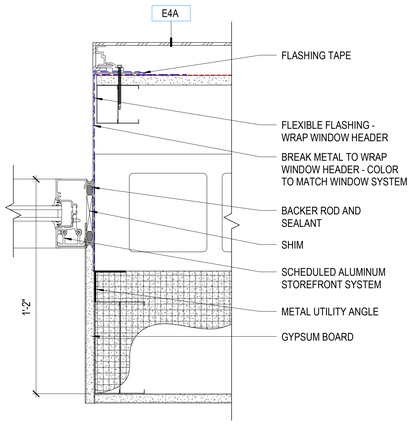

E3 WINDOW JAMB DETAIL

SCALE: 3" = 1'-0"

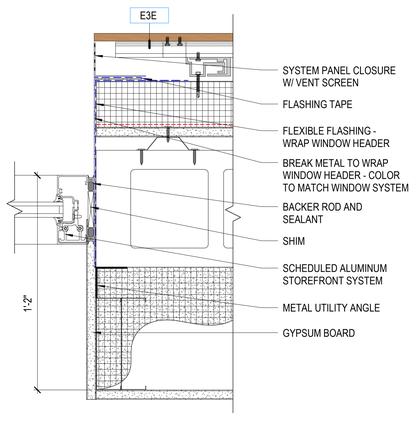

E4 WINDOW JAMB DETAIL

SCALE: 3" = 1'-0"

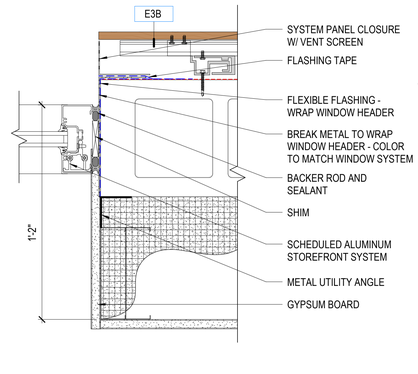

E5 WINDOW JAMB DETAIL

SCALE: 3" = 1'-0"

MHTN ARCHITECTS

MHTN Architects, Inc.
280 South 400 West
Suite 250
Salt Lake City, Utah 84101
Telephone (801) 595-6700
www.mhtn.com

JORDAN SCHOOL DISTRICT

JORDAN LEARNING CENTER

3706 WEST 9800 SOUTH
SOUTH JORDAN, UT 84009

©2023 MHTN ARCHITECTS, INC.

Confidentiality Notice:
This document is intended for use on the Project identified herein by individuals and companies involved in the design, permitting, bidding and construction of the Project. MHTN Architects, Inc. grants limited rights to distribution and reproduce this document for this express purpose only. Distribution, printing or copying this document for purposes other than those indicated is strictly prohibited. If a digital copy of this document is received in error, please delete it.

SEAL

STATE OF UTAH
CLIFFORD HOWARD CURTIS
No. 7394786-0301
2/4 AUGUST 2024
LICENSED ARCHITECT

MHTN PROJECT NO. 2024528

Original drawing is 30 x 42. Do not scale contents of this drawing.

REVISIONS
CONTRACTOR TO VERIFY DRAWINGS IN FIELD USE REFLECT LAST REVISION DATE.

NO.	DATE	DESCRIPTION

ISSUE
CONSTRUCTION DOCUMENTS
AUGUST 29, 2024

SHEET NAME
ENVELOPE DETAILS

SHEET NUMBER
A332

Autodesk Docs://2024528 JSD Retail Remodel/A2X 2024528 JSD Retail Remodel.rvt
8/28/2024 7:52:19 AM

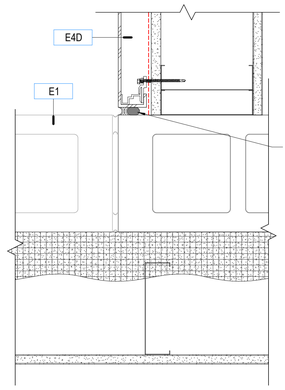

B3 PLAN DETAIL
SCALE: 3" = 1'-0"

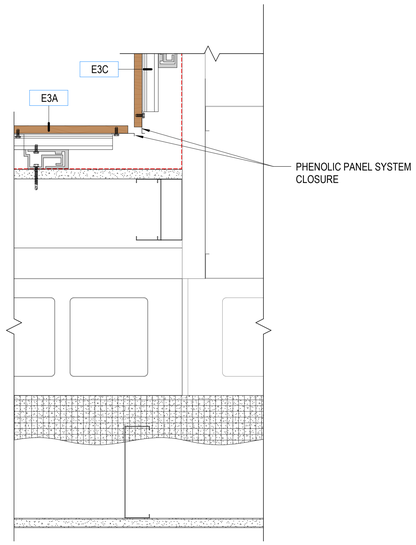

B4 PLAN DETAIL
SCALE: 3" = 1'-0"

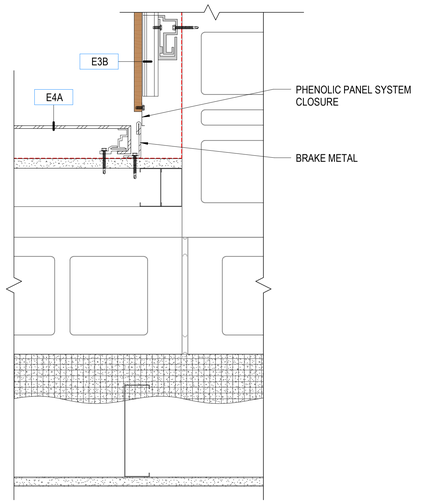

B5 PLAN DETAIL
SCALE: 3" = 1'-0"

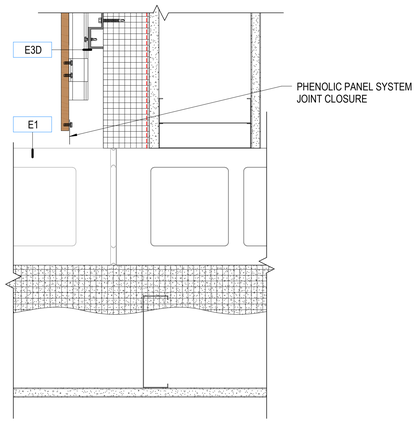

D2 PLAN DETAIL
SCALE: 3" = 1'-0"

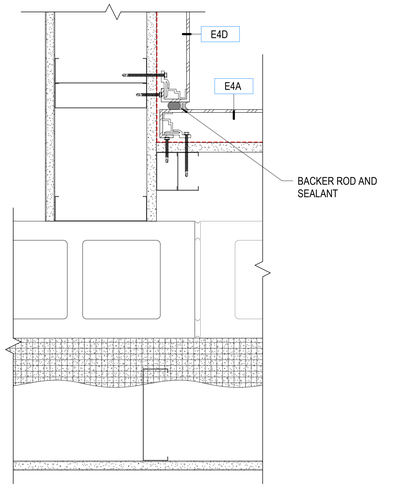

D3 PLAN DETAIL
SCALE: 3" = 1'-0"

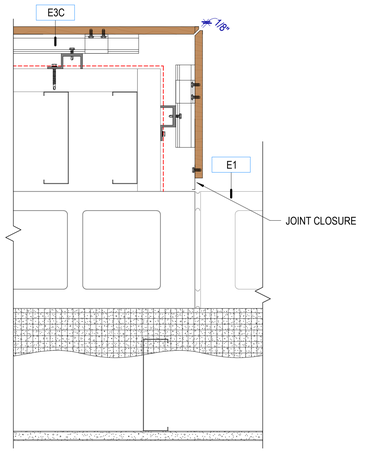

D4 PLAN DETAIL
SCALE: 3" = 1'-0"

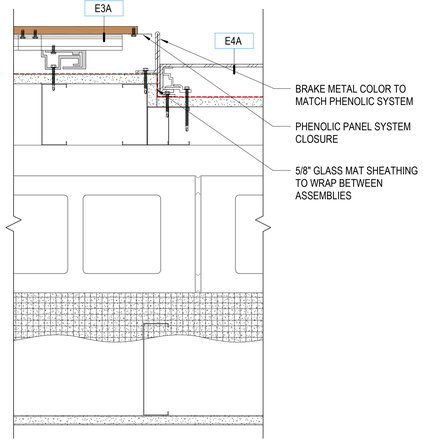

D5 PLAN DETAIL
SCALE: 3" = 1'-0"

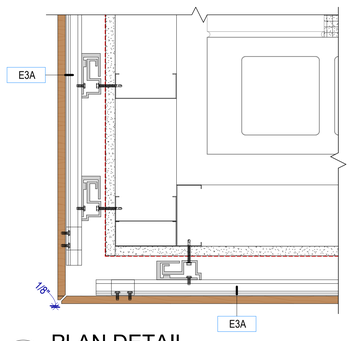

E2 PLAN DETAIL
SCALE: 3" = 1'-0"

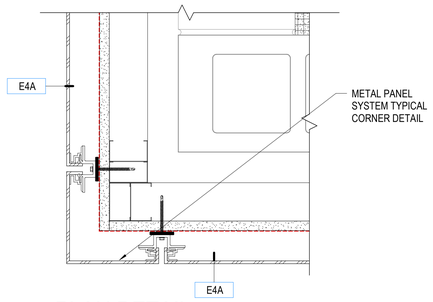

E3 PLAN DETAIL
SCALE: 3" = 1'-0"

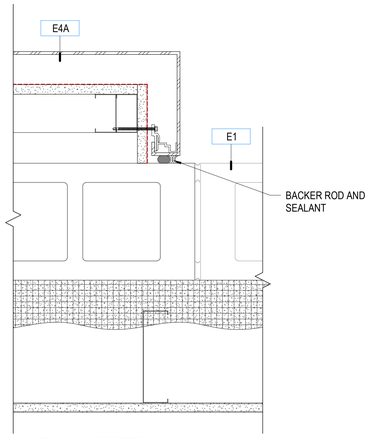

E4 PLAN DETAIL
SCALE: 3" = 1'-0"

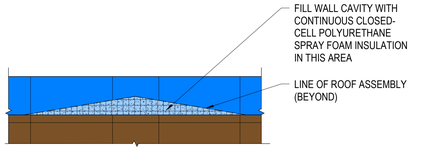

E5 ELEVATION DETAIL
SCALE: 3/16" = 1'-0"

MHTN ARCHITECTS
MHTN Architects, Inc.
280 South 400 West
Suite 250
Salt Lake City, Utah 84101
Telephone (801) 595-6700
www.mhtn.com

JORDAN SCHOOL DISTRICT

JORDAN LEARNING CENTER

3706 WEST 9800 SOUTH
SOUTH JORDAN, UT 84009

©2023 MHTN ARCHITECTS, INC.

Confidentiality Notice:
This document is intended for use on the Project identified herein by individuals and companies involved in the design, permitting, bidding and construction of the Project. MHTN Architects, Inc. grants limited rights to distribute and reproduce this document for this express purpose only. Distribution, printing or copying this document for purposes other than those indicated is strictly prohibited. If a digital copy of this document is received in error, please delete it.

SEAL

MHTN PROJECT NO. 2024528

Original drawing is 30 x 42. Do not scale contents of this drawing.

REVISIONS
CONTRACTOR TO VERIFY DRAWINGS IN FIELD USE REFLECT LAST REVISION DATE.

NO.	DATE	DESCRIPTION

ISSUE
CONSTRUCTION DOCUMENTS
AUGUST 29, 2024

SHEET NAME
ENVELOPE DETAILS

SHEET NUMBER
A333

Autodesk Docs://2024528 JSD Retail Remodel/A24 2024528 JSD Retail Remodel.rvt
8/28/2024 7:52:21 AM

SKYLIGHT DETAILS GENERAL NOTES

SEE STRUCTURAL FOR FASTENING REQUIREMENTS

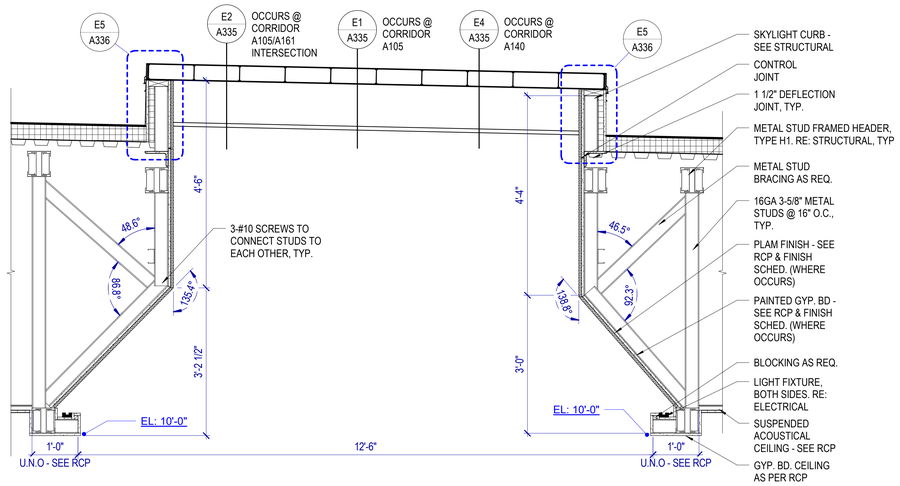

C3 SKYLIGHT DETAIL

SCALE: 3/4" = 1'-0"

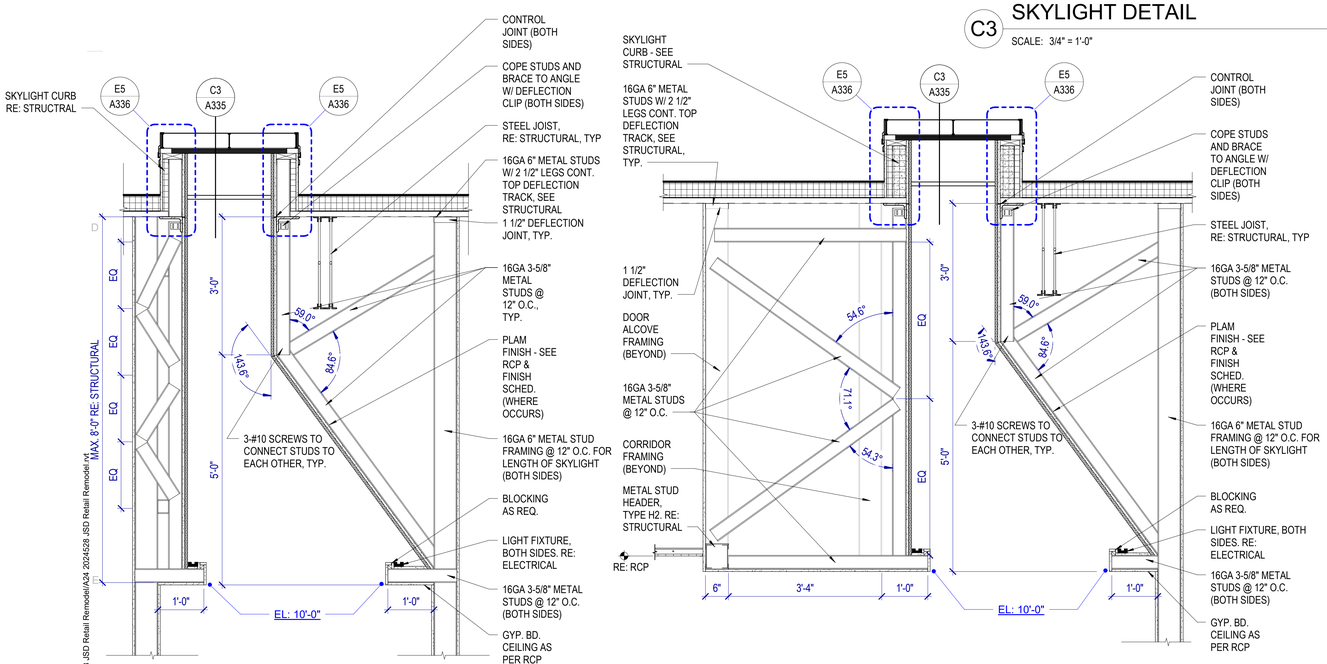

E1 SKYLIGHT DETAIL

SCALE: 3/4" = 1'-0"

E2 SKYLIGHT DETAIL

SCALE: 3/4" = 1'-0"

E4 SKYLIGHT DETAIL

SCALE: 3/4" = 1'-0"

MHTN ARCHITECTS

MHTN Architects, Inc.
280 South 400 West
Suite 250
Salt Lake City, Utah 84101
Telephone (801) 595-6700
www.mhtn.com

JORDAN SCHOOL DISTRICT

JORDAN LEARNING CENTER

3706 WEST 9800 SOUTH
SOUTH JORDAN, UT 84009

©2023 MHTN ARCHITECTS, INC.

Confidentiality Notice
This document is intended for use on the Project identified herein by individuals and companies involved in the design, permitting, bidding and construction of the Project. MHTN Architects, Inc. grants limited rights to distribute and reproduce this document for this express purpose only. Distribution, printing or copying this document for purposes other than those indicated is strictly prohibited. If a digital copy of this document is received in error, please delete it.

SEAL

STATE OF UTAH
CLIFFORD HOWARD CURTIS
No. 7394786-0301
24 AUGUST 2024
REGISTERED ARCHITECT

MHTN PROJECT NO. 2024528

Original drawing is 30 x 42. Do not scale contents of this drawing.

REVISIONS
CONTRACTOR TO VERIFY DRAWINGS IN FIELD USE REFLECT LAST REVISION DATE.

NO.△	DATE	DESCRIPTION

ISSUE
CONSTRUCTION DOCUMENTS
AUGUST 29, 2024

SHEET NAME
SKYLIGHT DETAILS

SHEET NUMBER
A335

Autodesk Docs://2024528 JSD Retail Remodel/A2# 2024528 JSD Retail Remodel_n#_8/28/2024 7:52:22 AM

SKYLIGHT DETAILS GENERAL NOTES

SEE STRUCTURAL FOR FASTENING REQUIREMENTS

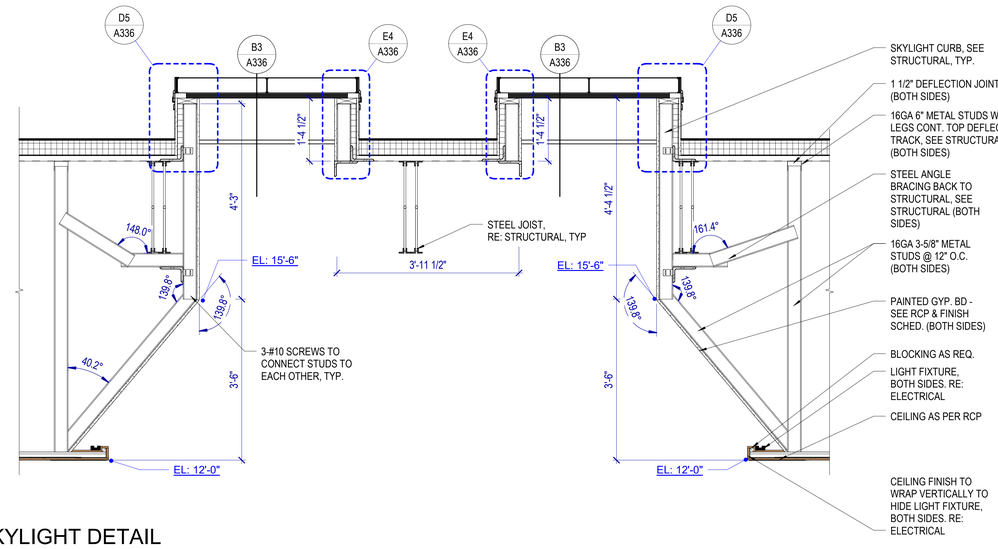

B1 SKYLIGHT DETAIL

SCALE: 3/4" = 1'-0"

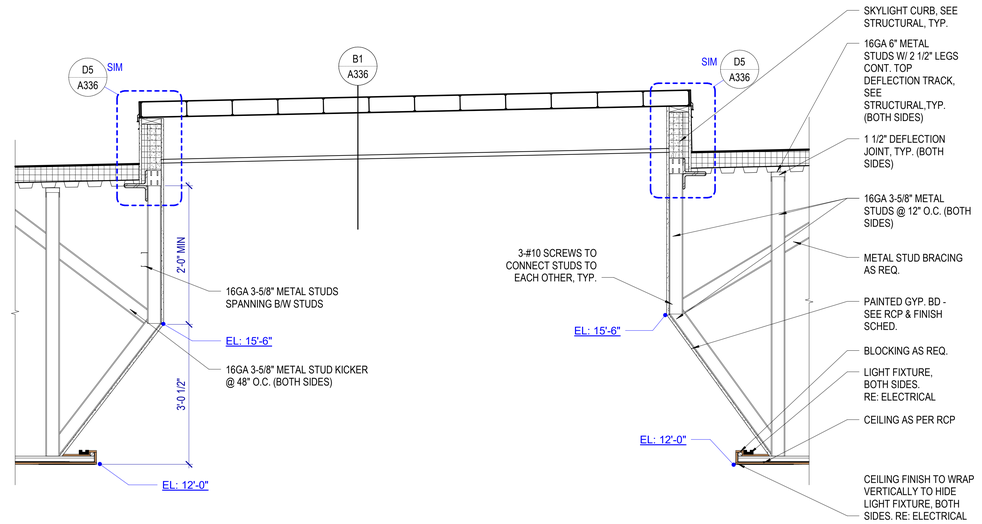

B3 SKYLIGHT DETAIL

SCALE: 3/4" = 1'-0"

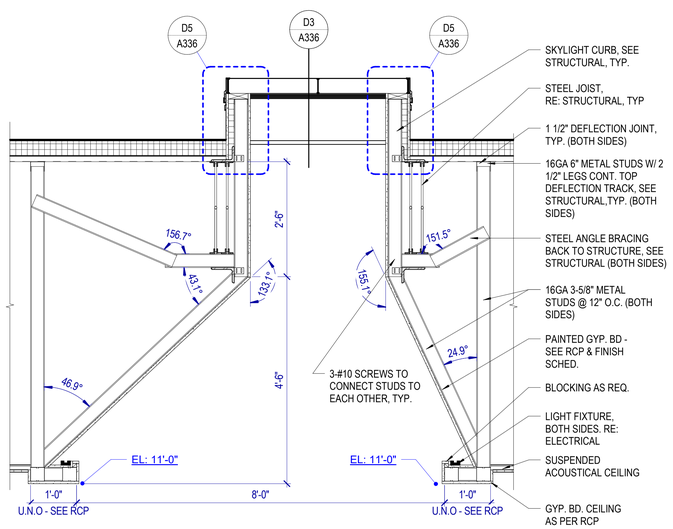

D1 SKYLIGHT DETAIL

SCALE: 3/4" = 1'-0"

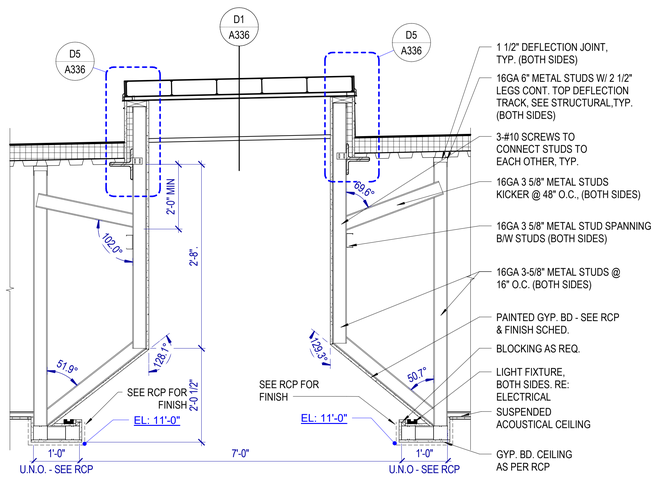

D3 SKYLIGHT DETAIL

SCALE: 3/4" = 1'-0"

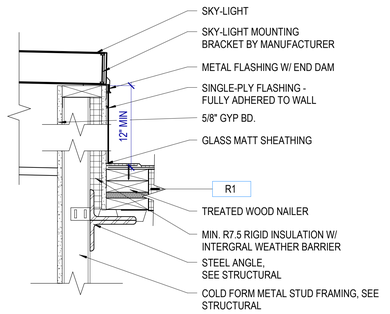

D5 SKYLIGHT DETAIL

SCALE: 1 1/2" = 1'-0"

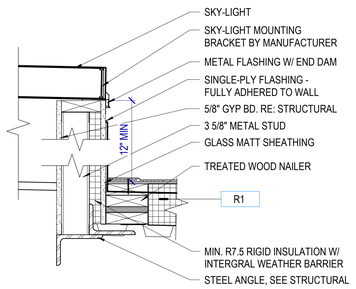

E4 SKYLIGHT DETAIL

SCALE: 1 1/2" = 1'-0"

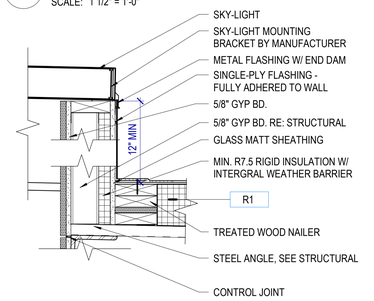

E5 SKYLIGHT DETAIL

SCALE: 1 1/2" = 1'-0"

MHTN ARCHITECTS

MHTN Architects, Inc.
280 South 400 West
Suite 250
Salt Lake City, Utah 84101
Telephone (801) 595-6700
www.mhtn.com

JORDAN SCHOOL DISTRICT

JORDAN LEARNING CENTER

3706 WEST 9800 SOUTH
SOUTH JORDAN, UT 84009

©2023 MHTN ARCHITECTS, INC.

Confidentiality Notice
This document is intended for use on the Project identified herein by individuals and companies involved in the design, permitting, bidding and construction of the Project. MHTN Architects, Inc. grants limited rights to distribute and reproduce this document for purposes related to the Project. Distributing or reproducing this document for purposes other than those indicated is strictly prohibited. If a digital copy of this document is received in error, please delete it.

SEAL

STATE OF UTAH
CLIFFORD HOWARD CURTIS
No. 7394786-0301
24 AUGUST 2024
REGISTERED ARCHITECT

MHTN PROJECT NO. 2024528

Original drawing is 30 x 42. Do not scale contents of this drawing.

REVISIONS
CONTRACTOR TO VERIFY DRAWINGS IN FIELD USE REFLECT LAST REVISION DATE.

NO.△	DATE	DESCRIPTION

ISSUE
CONSTRUCTION DOCUMENTS
AUGUST 29, 2024

SHEET NAME
SKYLIGHT DETAILS

SHEET NUMBER
A336

Autodesk Docs://2024528 -ISD Retail Remodel/A24 2024528 -ISD Retail Remodel.rvt
8/29/2024 7:52:23 AM

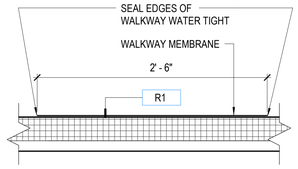

A1 ROOF WALKWAY DETAIL

SCALE: 1 1/2" = 1'-0"

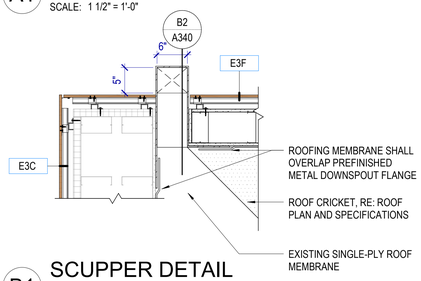

B1 SCUPPER DETAIL

SCALE: 1" = 1'-0"

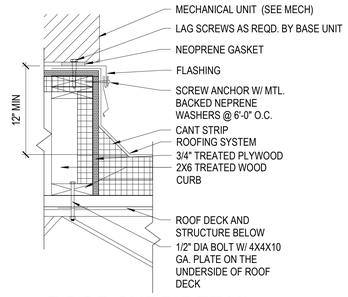

A2 ROOF CURB DETAIL

SCALE: 1 1/2" = 1'-0"

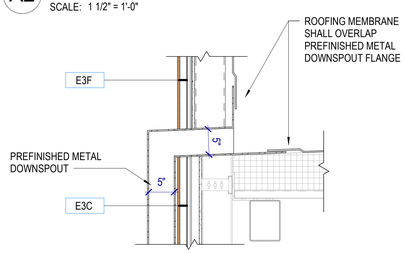

B2 SCUPPER DETAIL

SCALE: 1" = 1'-0"

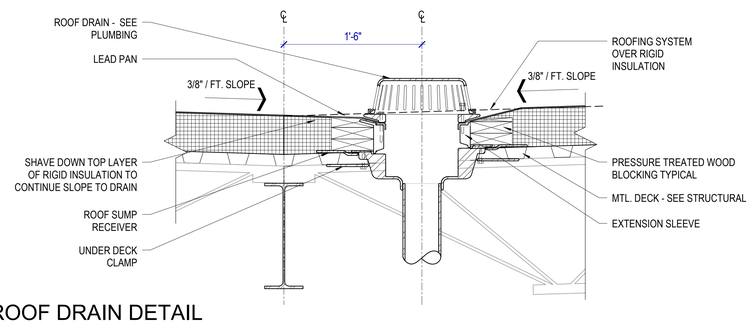

B3 ROOF DRAIN DETAIL

SCALE: 1 1/2" = 1'-0"

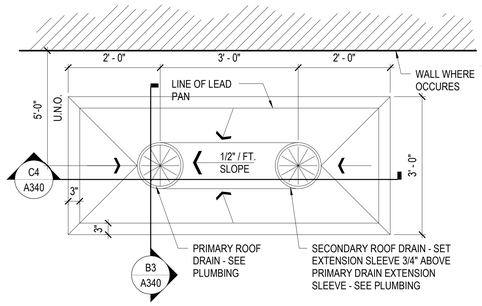

B5 ROOF DRAIN (DOUBLE) PLAN

SCALE: 3/4" = 1'-0"

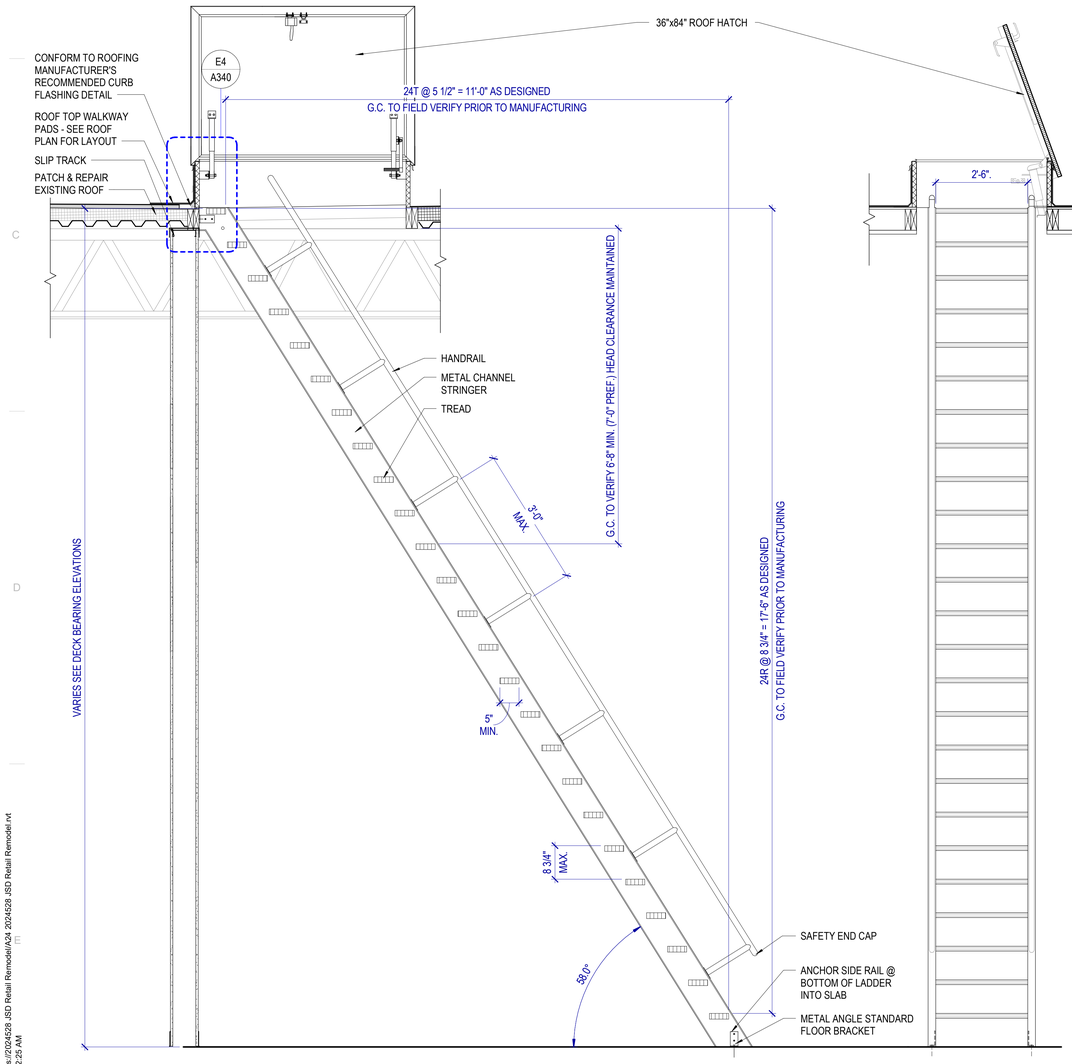

E1 SHIP LADDER DETAIL

SCALE: 3/4" = 1'-0"

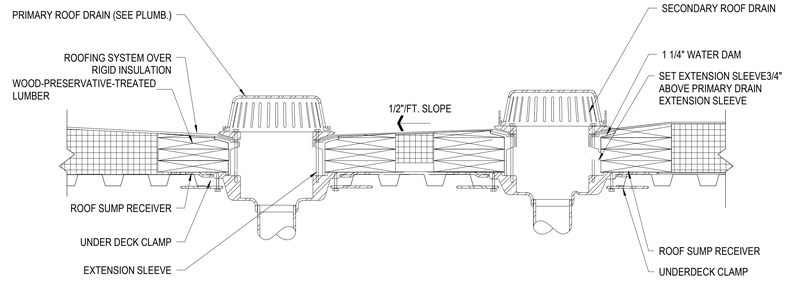

C4 ROOF DRAIN DOUBLE

SCALE: 1 1/2" = 1'-0"

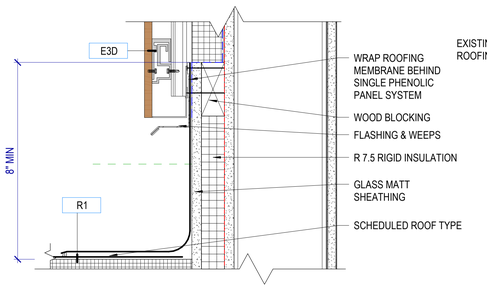

D4 ROOF DETAIL

SCALE: 3" = 1'-0"

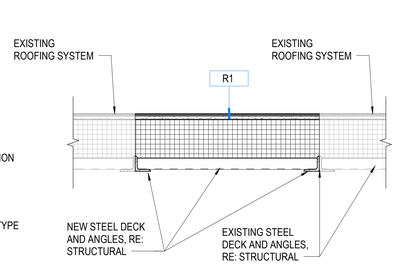

D5 ROOF INFILL

SCALE: 1 1/2" = 1'-0"

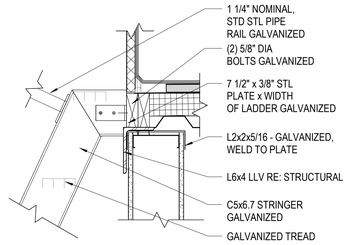

E4 SHIP LADDER DETAIL

SCALE: 1 1/2" = 1'-0"

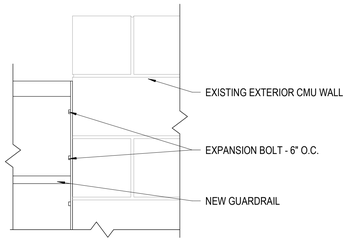

E5 GUARDRAIL DETAIL

SCALE: 1 1/2" = 1'-0"

ROOF DETAIL GENERAL NOTES

Terms such as "SEE SPECS," "RE: MECHANICAL" and so forth have been omitted from these details. All details require the general contractor and sub-contractors to refer to other drawings and specifications as required to understand and provide the items indicated and to provide supporting items that may or may not be shown.

The continuous nature of the materials shown in the details is inferred, though the word "continuous" may be omitted from the detail notes.

Cleats: Unless specifically noted otherwise, provide continuous cleats.

Backer Rods: Provide backer rods at all joints that incorporate sealants.

MHTN ARCHITECTS
MHTN Architects, Inc.
280 South 400 West
Suite 250
Salt Lake City, Utah 84101
Telephone (801) 595-6700
www.mhtn.com

JORDAN SCHOOL DISTRICT

JORDAN LEARNING CENTER

3706 WEST 9800 SOUTH
SOUTH JORDAN, UT 84009

©2023 MHTN ARCHITECTS, INC.
Confidentiality Notice:
This document is intended for use on the Project identified herein by individuals and companies involved in the design, permitting, bidding and construction of the Project. MHTN Architects, Inc. grants limited rights to distribute and reproduce this document for this express purpose only. Distribution, printing or copying this document for purposes other than those indicated is strictly prohibited. If a digital copy of this document is received in error, please delete it.

SEAL

MHTN PROJECT NO. 2024528

Original drawing is 30 x 42. Do not scale contents of this drawing.

REVISIONS
CONTRACTOR TO VERIFY DRAWINGS IN FIELD USE REFLECT LAST REVISION DATE.

NO △	DATE	DESCRIPTION

ISSUE
CONSTRUCTION DOCUMENTS
AUGUST 29, 2024

SHEET NAME
ROOF DETAILS

SHEET NUMBER
A340

Autodesk Docs://2024528 JSD Retail Remodel/A24 2024528 JSD Retail Remodel.rvt
8/28/2024 7:52:25 AM

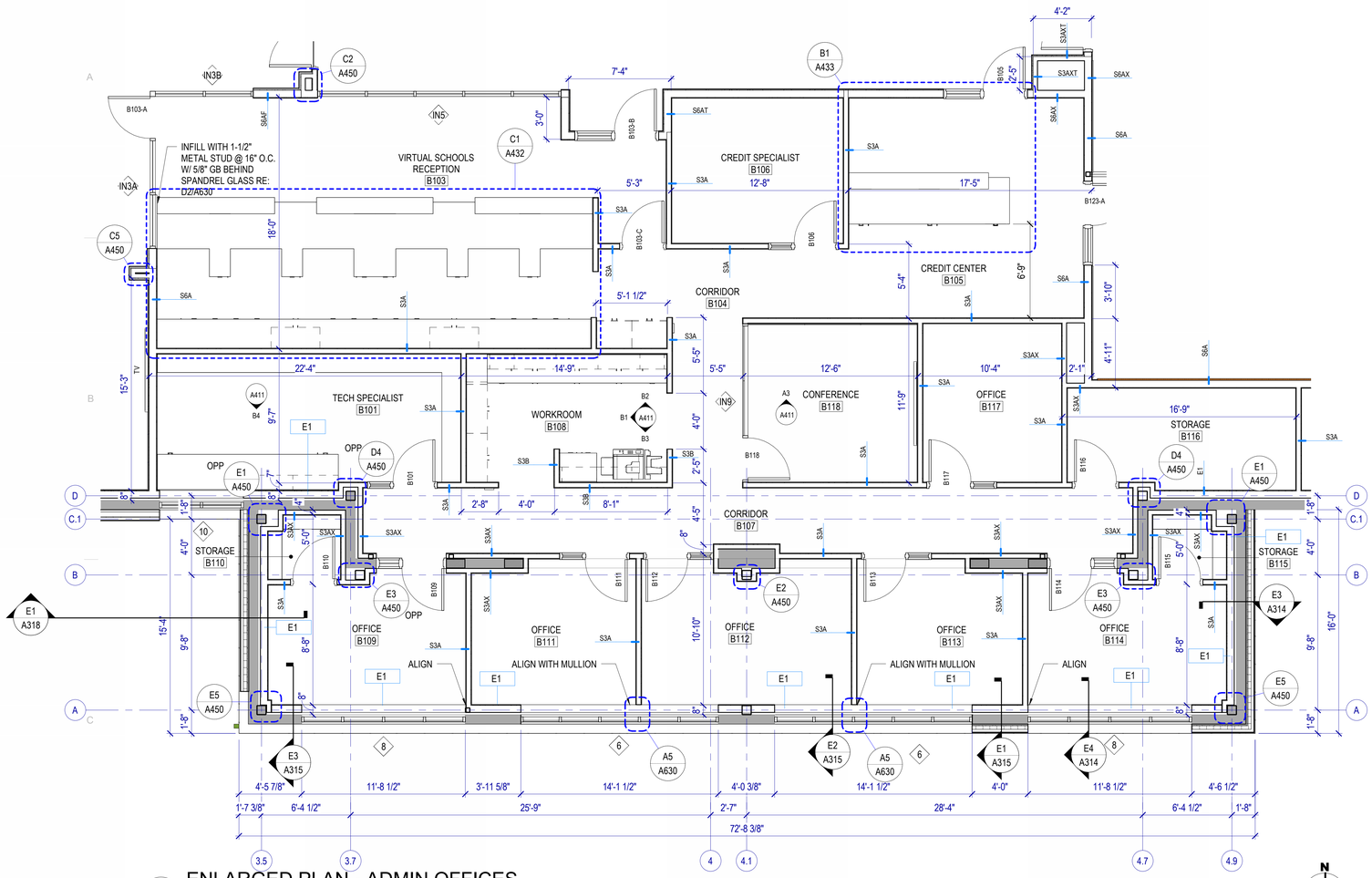

C1 ENLARGED PLAN - ADMIN OFFICES

SCALE: 1/4" = 1'-0"

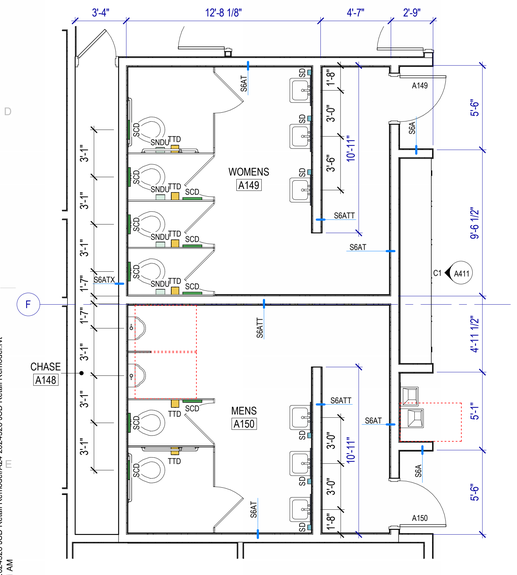

E1 RESTROOMS A149 & A150

SCALE: 1/4" = 1'-0"

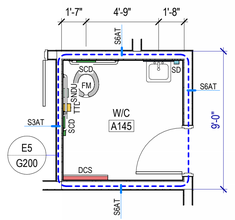

D2 RESTROOM A145

SCALE: 1/4" = 1'-0"

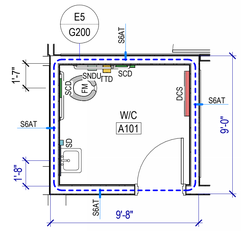

D3 RESTROOM A101

SCALE: 1/4" = 1'-0"

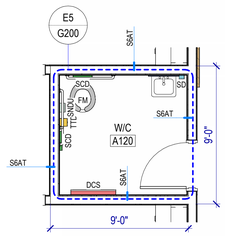

E2 RESTROOM A120

SCALE: 1/4" = 1'-0"

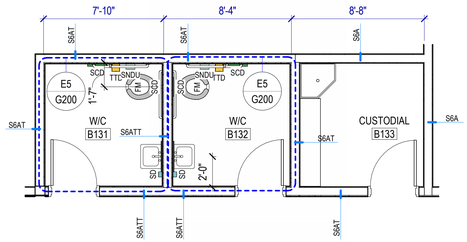

E3 CUSTODIAL B133 AND RESTROOMS B131 & B132

SCALE: 1/4" = 1'-0"

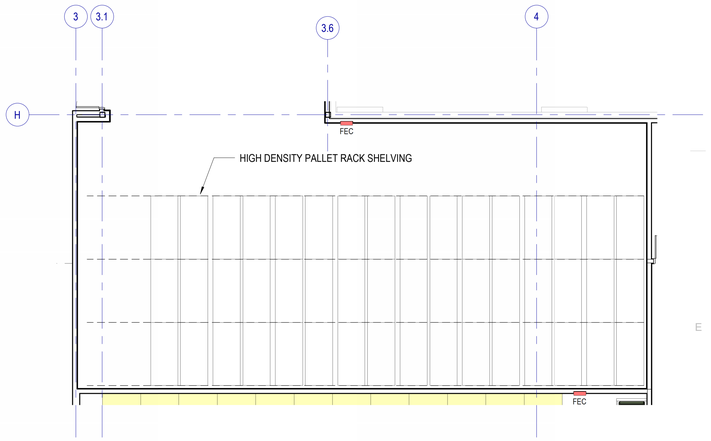

E4 ALTERNATE #1 - HIGH DENSITY SHELVING

SCALE: 1/8" = 1'-0"

PARTIAL PLAN GENERAL NOTES

References to sheets below are provided to aid in navigating the drawings.

RE: G200 for Fixture Mounting Heights.

RE: G400 for Floor, Roof and Exterior Wall Types.

RE: G500 for Interior Wall Types.

RE: A450 for Locker Types.

RE: A640-A642 for finish schedule.

Interior Wall Height: All walls are continuous from floor to roof or floor deck above, UNO.

Keynotes: Not all keynotes apply to this sheet.

LEGEND - TOILET ROOMS

PLAN	ELEVATION	
TTD		TOILET TISSUE DISPENSER, OFCI
M24x36		FRAMED MIRROR
SD		SOAP DISPENSER, OFCI
PTD		PAPER TOWEL DISPENSER, OFCI
SNDU		SANITARY NAPKIN DISPOSAL UNIT, OFCI
SCD		SEAT COVER DISPENSER, OFCI
DCS		DIAPER CHANGING STATION
		WALL MOUNTED WATER CLOSET
FM		FLOOR MOUNTED WATER CLOSET
		WALL HUNG URINAL
SD		WALL HUNG LAVATORY
		COUNTER MOUNTED SINK
FD		FLOOR DRAIN
MBH		MOP & BROOM HOLDER

MHTN ARCHITECTS
MHTN Architects, Inc.
280 South 400 West
Suite 250
Salt Lake City, Utah 84101
Telephone (801) 595-6700
www.mhtn.com

JORDAN SCHOOL DISTRICT

JORDAN LEARNING CENTER

3706 WEST 9800 SOUTH
SOUTH JORDAN, UT 84009

©2023 MHTN ARCHITECTS, INC.
Confidentiality Notice:
This document is intended for use on the Project identified herein by individuals and companies involved in the design, permitting, bidding and construction of the Project. MHTN Architects, Inc. grants limited rights to distribute and reproduce this document for bid, permitting, review purposes. Distribution, printing or copying this document for purposes other than those indicated is strictly prohibited. If a digital copy of this document is received in error, please delete it.

SEAL

STATE OF UTAH
CLIFFORD HOWARD CURTIS
No. 7394786-0301
2/4 AUGUST 2024
LICENSED ARCHITECT

MHTN PROJECT NO. 2024528

Original drawing is 30 x 42. Do not scale contents of this drawing.

REVISIONS
CONTRACTOR TO VERIFY DRAWINGS IN FIELD USE REFLECT LAST REVISION DATE.

NO.	DATE	DESCRIPTION

ISSUE
CONSTRUCTION DOCUMENTS
AUGUST 29, 2024

SHEET NAME
PARTIAL PLANS

SHEET NUMBER
A400

Autodesk Docs://2024528 JSD Retail Remodel/A24 2024528 JSD Retail Remodel.rvt
8/28/2024 7:02:31 AM

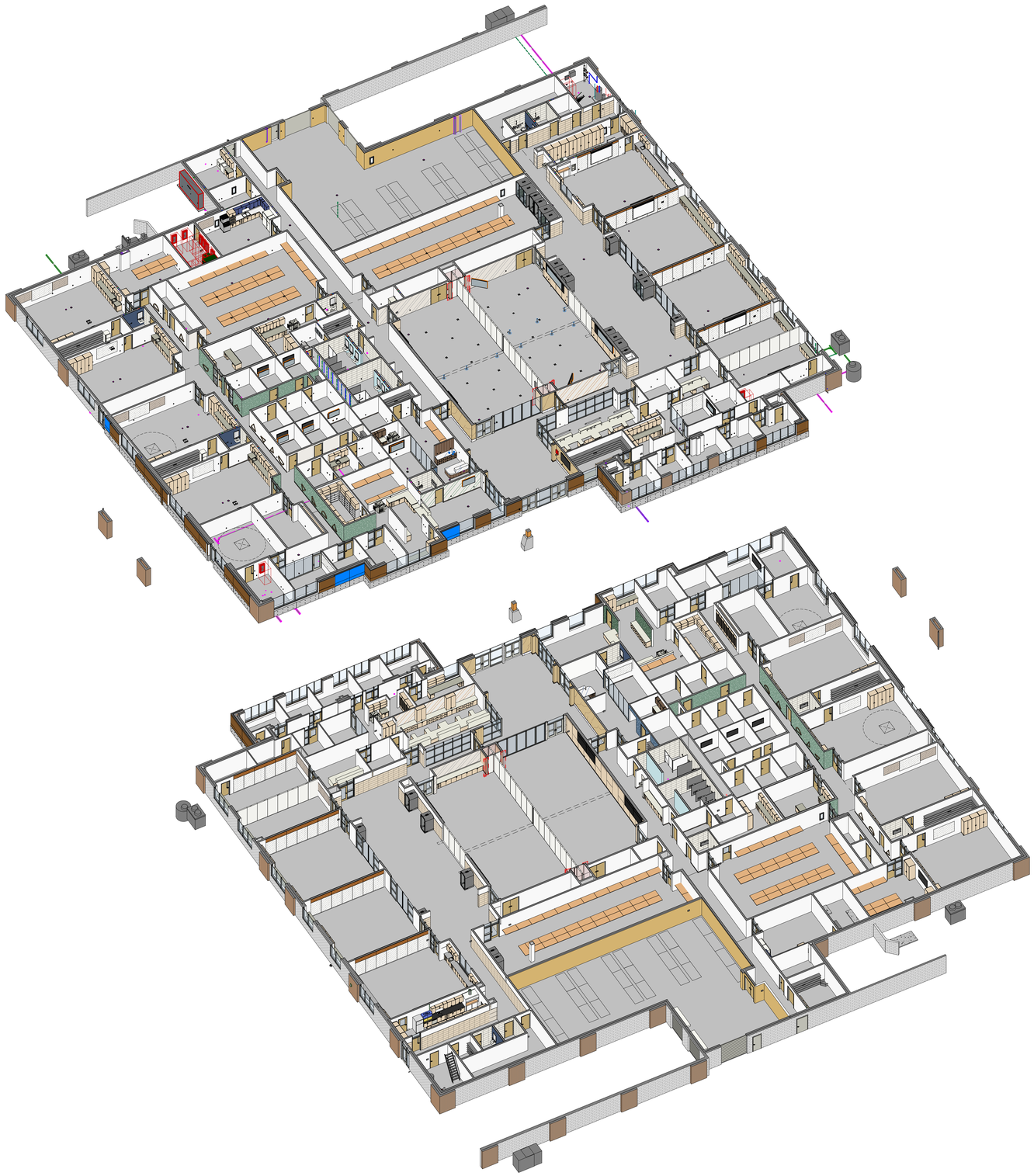

INTERIOR AXONOMETRIC

INTERIOR ELEVATIONS GENERAL NOTES

RE: North American Architectural Woodwork Standards v3.0 (NAAWS), Cabinet Design Series for cabinet types.

RE: G500 for Interior Wall Types.

RE: A640A & A640B for the Finish Schedule.

Dimensions shown to walls or casework are to finished face of wall or cabinet, UNO.

Equipment indicated by dashed lines is a general representation and shown for coordination purposes only.

Mechanical, electrical, plumbing and telecom rough-in locations are shown for general coordination purposes only. Refer to mechanical, electrical, plumbing and telecom drawings.

Countertops: 25" deep with 4" high backsplash, UNO. Provide sidesplashes at walls, tall cabinets or similar transitions.

Blocking: Provide blocking in walls at cabinets, wall-mounted accessories, equipment, display boards and similar items.

Finishes: Finishes are required on all exposed and semi-exposed surfaces, UNO. Wall elevations are not shown for walls where the Finish Schedule is deemed adequate to convey the intent.

Cabinet Locks: Provide locks on cabinet drawers and doors, keyed alike by room, UNO.

Casework Finishes: Provide laminate finishes on all exposed and semi-exposed surfaces as required by the specifications. Provide laminate finishes on concealed surfaces if required by the specifications. Refer to NAAWS Section 10.4.4 for definitions of exposed, semi-exposed and concealed surfaces.

LEGEND - INTERIOR ELEVATION

- TACKABLE WALL COVERING, TCK1 SEE DETAIL A3 / A435
- TACKABLE WALL COVERING, TCK2 SEE DETAIL A3 / A435
- MARKERBOARD, SEE DETAIL A3 / A435
- WALL TILE WT2
- GLAZING
- PLASTIC LAMINATE PL1
- PLASTIC LAMINATE PL2
- PLASTIC LAMINATE PL3
- WALLCOVERING WC2
- RIBBED WALL PANEL WP1
- WALLCOVERING WC1
- WALL TILE WT7
- TILE BASE TB1
- DISHWASHER, CFCI
- MICROWAVE, CFCI
- EYEWASH, RE: PLUMBING
- REFRIGERATOR, OFOI
- REFRIGERATOR, CFCI
- CHEMICAL STORAGE CABINETS
- COPIER, OFOI
- SINK, RE: PLUMBING
- DRINKING FOUNTAIN, RE: PLUMBING
- UNDERCOUNTER REFFRIDGERATOR, CFCI
- TV MONITOR, RE: ELECTRICAL
- METAL LATERAL FILE STORAGE, OFOI
- DRYER & WASHER, CFCI

MHTN ARCHITECTS

MHTN Architects, Inc.
280 South 400 West
Suite 250
Salt Lake City, Utah 84101
Telephone (801) 595-6700
www.mhtn.com

JORDAN SCHOOL DISTRICT

JORDAN LEARNING CENTER

3706 WEST 9800 SOUTH
SOUTH JORDAN, UT 84009

©2023 MHTN ARCHITECTS, INC.

Confidentiality Notice:
This document is intended for use on the Project identified herein by individuals and companies involved in the design, permitting, bidding and construction of the Project. MHTN Architects, Inc. grants limited rights to distribute and reproduce this document for this express purpose only. Distribution, printing or copying this document for purposes other than those indicated is strictly prohibited. If a digital copy of this document is received in error, please delete it.

SEAL

STATE OF UTAH
CLIFFORD HOWARD CURTIS
No. 7394786-0301
24 AUGUST 2024
LICENSED ARCHITECT

MHTN PROJECT NO. 2024528

Original drawing is 30 x 42. Do not scale contents of this drawing.

REVISIONS
CONTRACTOR TO VERIFY DRAWINGS IN FIELD USE REFLECT LAST REVISION DATE.

NO.	DATE	DESCRIPTION

ISSUE
CONSTRUCTION DOCUMENTS
AUGUST 29, 2024

SHEET NAME
INTERIOR AXONOMETRIC

SHEET NUMBER
A410

Autodesk Docs://2024528 JSD Retail Remodel/A24 2024528 JSD Retail Remodel.rvt
8/28/2024 7:52:50 AM

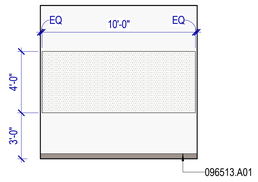

A1 CONFERENCE A108 - E

SCALE: 1/4" = 1'-0"

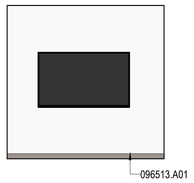

A2 CONFERENCE A108 - W

SCALE: 1/4" = 1'-0"

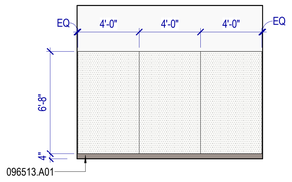

A3 CONFERENCE B118 - N

SCALE: 1/4" = 1'-0"

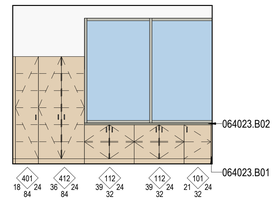

A4 RECEPTION A103 - S

SCALE: 1/4" = 1'-0"

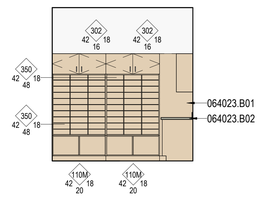

B1 WORKROOM B108 - W

SCALE: 1/4" = 1'-0"

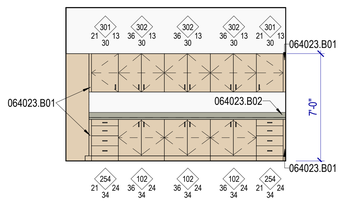

B2 WORKROOM B108 - N

SCALE: 1/4" = 1'-0"

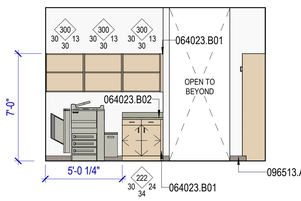

B3 WORKROOM B108 - S

SCALE: 1/4" = 1'-0"

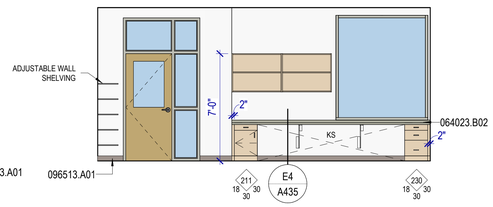

B4 TECH SPECIALIST - S

SCALE: 1/4" = 1'-0"

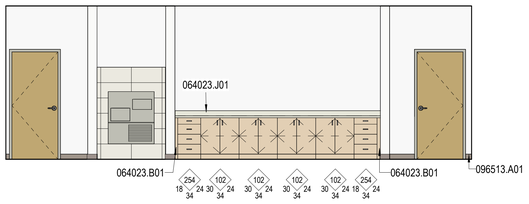

C1 CORRIDOR A140

SCALE: 1/4" = 1'-0"

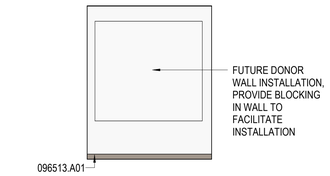

C2 DONOR WALL

SCALE: 1/4" = 1'-0"

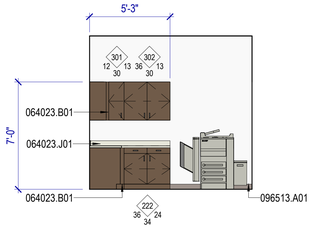

C3 PRINT A153 - N

SCALE: 1/4" = 1'-0"

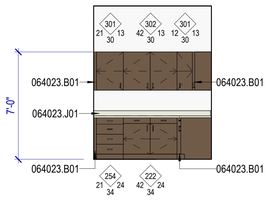

C4 PRINT A153 - W

SCALE: 1/4" = 1'-0"

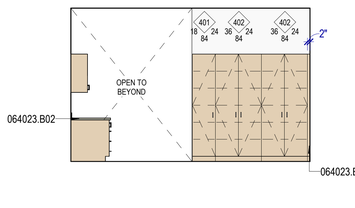

D1 WORK ROOM A133 - E

SCALE: 1/4" = 1'-0"

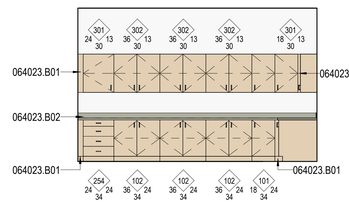

D2 WORK ROOM A133 - WEST

SCALE: 1/4" = 1'-0"

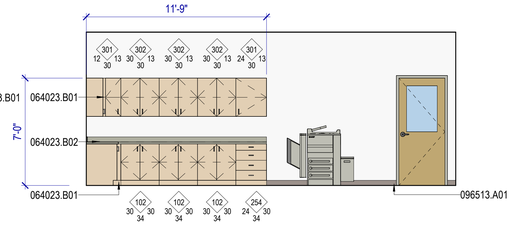

D3 WORK ROOM A133 - NORTH

SCALE: 1/4" = 1'-0"

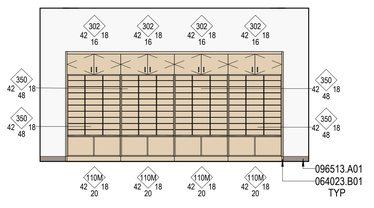

D4 CDC MAILBOX

SCALE: 1/4" = 1'-0"

KEYNOTES

064023.B01	Filler panel
064023.B02	1-1/2" scheduled plastic laminate countertop w/ 4" backsplash
064023.J01	1-1/2" scheduled solid surface countertop w/ 4" backsplash
096513.A01	RESILIENT BASE

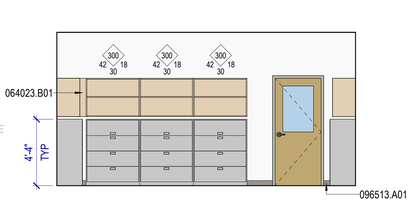

E1 RECORDS A104 - EAST

SCALE: 1/4" = 1'-0"

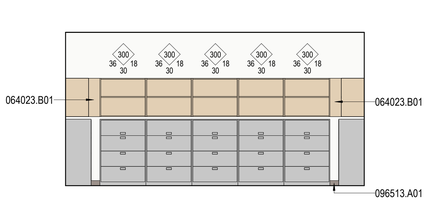

E2 RECORDS A104 - WEST

SCALE: 1/4" = 1'-0"

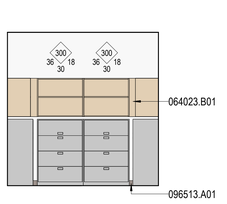

E3 RECORDS A104 - NORTH

SCALE: 1/4" = 1'-0"

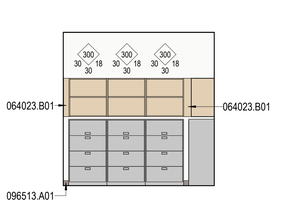

E4 RECORDS A104 - SOUTH

SCALE: 1/4" = 1'-0"

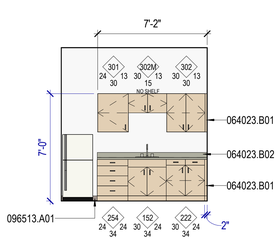

E5 SANITARY

SCALE: 1/4" = 1'-0"

INTERIOR ELEVATIONS GENERAL NOTES

RE: North American Architectural Woodwork Standards v3.0 (NAAWS), Cabinet Design Series for cabinet types.

RE: G500 for Interior Wall Types.

RE: A640A & A640B for the Finish Schedule.

Dimensions shown to walls or casework are to finished face of wall or cabinet, UNO.

Equipment indicated by dashed lines is a general representation and shown for coordination purposes only.

Mechanical, electrical, plumbing and telecom rough-in locations are shown for general coordination purposes only. Refer to mechanical, electrical, plumbing and telecom drawings.

Countertops: 25" deep with 4" high backsplash, UNO. Provide sidesplashes at walls, tall cabinets or similar transitions.

Blocking: Provide blocking in walls at cabinets, wall-mounted accessories, equipment, display boards and similar items.

Finishes: Finishes are required on all exposed and semi-exposed surfaces, UNO. Wall elevations are not shown for walls where the Finish Schedule is deemed adequate to convey the intent.

Cabinet Locks: Provide locks on cabinet drawers and doors, keyed alike by room, UNO.

Casework Finishes: Provide laminate finishes on all exposed and semi-exposed surfaces as required by the specifications. Provide laminate finishes on concealed surfaces if required by the specifications. Refer to NAAWS Section 10.4.4 for definitions of exposed, semi-exposed and concealed surfaces.

LEGEND - INTERIOR ELEVATION

- TACKABLE WALL COVERING, TCK1 SEE DETAIL A3 / A435
- TACKABLE WALL COVERING, TCK2 SEE DETAIL A3 / A435
- MARKERBOARD, SEE DETAIL A3 / A435
- WALL TILE WT2
- GLAZING
- PLASTIC LAMINATE PL1
- PLASTIC LAMINATE PL2
- PLASTIC LAMINATE PL3
- WALLCOVERING WC2
- RIBBED WALL PANEL WP1
- WALLCOVERING WC1
- WALL TILE WT7
- TILE BASE TB1
- DISHWASHER, CFCI
- MICROWAVE, CFCI
- EYEWASH, RE: PLUMBING
- REFRIGERATOR, OFOI
- REFRIGERATOR, CFCI
- CHEMICAL STORAGE CABINETS
- COPIER, OFOI
- SINK, RE: PLUMBING
- DRINKING FOUNTAIN, RE: PLUMBING
- UNDERCOUNTER REFRIDGERATOR, CFCI
- TV MONITOR, RE: ELECTRICAL
- METAL LATERAL FILE STORAGE, OFOI
- DRYER & WASHER, CFCI

MHTN ARCHITECTS

MHTN Architects, Inc.
280 South 400 West
Suite 250
Salt Lake City, Utah 84101
Telephone (801) 595-6700
www.mhtn.com

JORDAN SCHOOL DISTRICT

JORDAN LEARNING CENTER

3706 WEST 9800 SOUTH
SOUTH JORDAN, UT 84009

©2023 MHTN ARCHITECTS, INC.

Confidentiality Notice:
This document is intended for use on the Project identified herein by individuals and companies involved in the design, permitting, bidding and construction of the Project. MHTN Architects, Inc. grants limited rights to distribute and reproduce this document for this express purpose only. Distribution, printing or copying this document for purposes other than those indicated is strictly prohibited. If a digital copy of this document is received in error, please delete it.

SEAL

STATE OF UTAH
CLIFFORD HOWARD CURTIS
No. 7394786-0301
2/4 AUGUST 2024
LICENSED ARCHITECT

MHTN PROJECT NO. 2024528

Original drawing is 30 x 42. Do not scale contents of this drawing.

REVISIONS
CONTRACTOR TO VERIFY DRAWINGS IN FIELD USE REFLECT LAST REVISION DATE.

NO.	DATE	DESCRIPTION

ISSUE
CONSTRUCTION DOCUMENTS
AUGUST 29, 2024

SHEET NAME
INTERIOR ELEVATIONS

SHEET NUMBER
A411

Autodesk Docs://2024528 JSD Retail Remodel/A24 2024528 JSD Retail Remodel.rvt
8/28/2024 7:52:57 AM

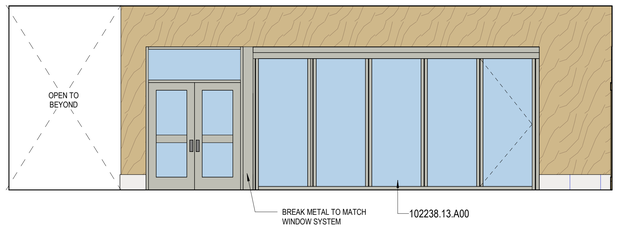

A1 LOBBY B100 - NORTH

SCALE: 1/4" = 1'-0"

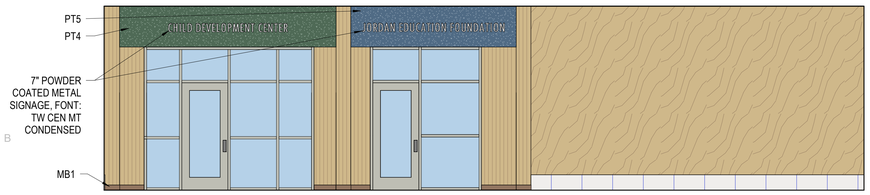

B1 LOBBY B100 - WEST

SCALE: 1/4" = 1'-0"

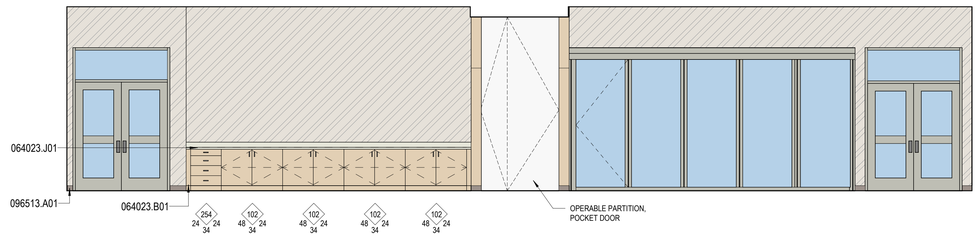

C1 MULTIPURPOSE B119 - SOUTH

SCALE: 1/4" = 1'-0"

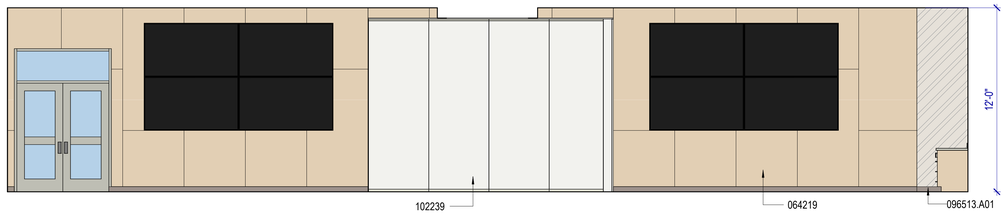

D1 MULTIPURPOSE B119 - EAST

SCALE: 1/4" = 1'-0"

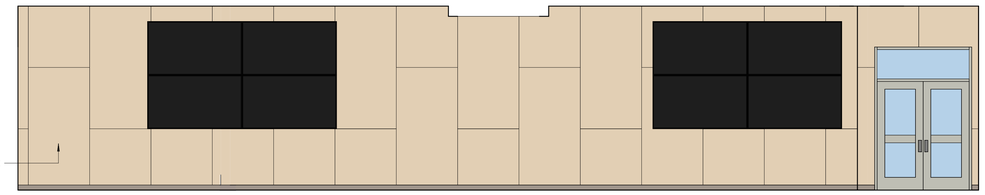

E1 MULTIPURPOSE B119 - WEST

SCALE: 1/4" = 1'-0"

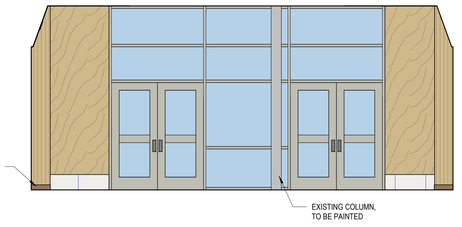

A3 LOBBY B100 - SOUTH

SCALE: 1/4" = 1'-0"

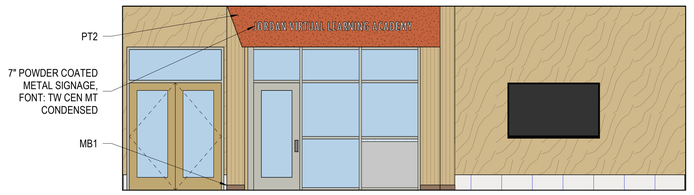

B3 LOBBY B100 - EAST

SCALE: 1/4" = 1'-0"

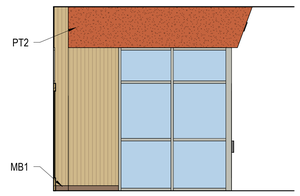

C3 LOBBY B100 -

SCALE: 1/4" = 1'-0"

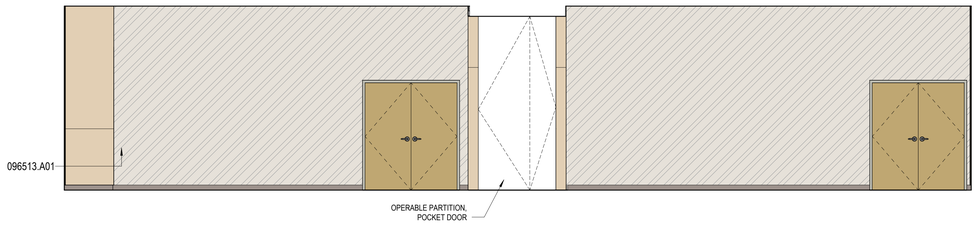

E3 MULTIPURPOSE B119 - NORTH

SCALE: 1/4" = 1'-0"

INTERIOR ELEVATIONS GENERAL NOTES

RE: North American Architectural Woodwork Standards v3.0 (NAAWS), Cabinet Design Series for cabinet types.

RE: G500 for Interior Wall Types.

RE: A640A & A640B for the Finish Schedule.

Dimensions shown to walls or casework are to finished face of wall or cabinet, UNO.

Equipment indicated by dashed lines is a general representation and shown for coordination purposes only.

Mechanical, electrical, plumbing and telecom rough-in locations are shown for general coordination purposes only. Refer to mechanical, electrical, plumbing and telecom drawings.

Countertops: 25" deep with 4" high backsplash, UNO. Provide sidesplashes at walls, tall cabinets or similar transitions.

Blocking: Provide blocking in walls at cabinets, wall-mounted accessories, equipment, display boards and similar items.

Finishes: Finishes are required on all exposed and semi-exposed surfaces, UNO. Wall elevations are not shown for walls where the Finish Schedule is deemed adequate to convey the intent.

Cabinet Locks: Provide locks on cabinet drawers and doors, keyed alike by room, UNO.

Casework Finishes: Provide laminate finishes on all exposed and semi-exposed surfaces as required by the specifications. Provide laminate finishes on concealed surfaces if required by the specifications. Refer to NAAWS Section 10.4.4 for definitions of exposed, semi-exposed and concealed surfaces.

LEGEND - INTERIOR ELEVATION

- TACKABLE WALL COVERING, TCK1 SEE DETAIL A3 / A435
- TACKABLE WALL COVERING, TCK2 SEE DETAIL A3 / A435
- MARKERBOARD, SEE DETAIL A3 / A435
- WALL TILE WT2
- GLAZING
- PLASTIC LAMINATE PL1
- PLASTIC LAMINATE PL2
- PLASTIC LAMINATE PL3
- WALLCOVERING WC2
- RIBBED WALL PANEL WP1
- WALLCOVERING WC1
- WALL TILE WT7
- TILE BASE TB1
- DISHWASHER, CFCI
- MICROWAVE, CFCI
- EYEWASH, RE: PLUMBING
- REFRIGERATOR, OFOI
- REFRIGERATOR, CFCI
- CHEMICAL STORAGE CABINETS
- COPIER, OFOI
- SINK, RE: PLUMBING
- DRINKING FOUNTAIN, RE: PLUMBING
- UNDERCOUNTER REFRIDGERATOR, CFCI
- TV MONITOR, RE: ELECTRICAL
- METAL LATERAL FILE STORAGE, OFOI
- DRYER & WASHER, CFCI

KEYNOTES

064023.B01	Filler panel
064023.J01	1-1/2" scheduled solid surface countertop w/ 4" backsplash
064219	SECTION 064219 - PLASTIC-LAMINATE-FACED WOOD PANELING
096513.A01	RESILIENT BASE
102238.13.A00	OPERABLE GLASS-PANEL PARTITIONS
102239	SECTION 102239 - FOLDING PANEL PARTITIONS

MHTN ARCHITECTS
MHTN Architects, Inc.
280 South 400 West
Suite 250
Salt Lake City, Utah 84101
Telephone (801) 595-6700
www.mhtn.com

JORDAN SCHOOL DISTRICT

JORDAN LEARNING CENTER

3706 WEST 9800 SOUTH
SOUTH JORDAN, UT 84009

©2023 MHTN ARCHITECTS, INC.
Confidentiality Notice:
This document is intended for use on the Project identified herein by individuals or entities engaged in the design, permitting, bidding and construction of the Project. MHTN Architects, Inc. grants limited rights to distribute and reproduce this document for this express purpose only. Distribution, printing or copying this document for purposes other than those indicated is strictly prohibited. If a digital copy of this document is received in error, please delete it.

SEAL

MHTN PROJECT NO. 2024528

Original drawing is 30 x 42. Do not scale contents of this drawing.

REVISIONS
CONTRACTOR TO VERIFY DRAWINGS IN FIELD USE REFLECT LAST REVISION DATE.

NO.	DATE	DESCRIPTION

ISSUE
CONSTRUCTION DOCUMENTS
AUGUST 29, 2024

SHEET NAME
INTERIOR ELEVATIONS

SHEET NUMBER
A412

Autodesk Docs://2024528 JSD Retail Remodel/A24 2024528 JSD Retail Remodel.rvt
8/28/2024 7:53:01 AM

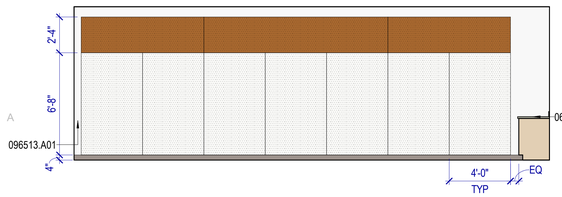

A1 TEACHING WALL - TYPICAL

SCALE: 1/4" = 1'-0"

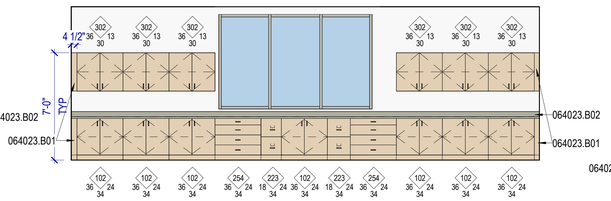

A2 LEARNING STUDIO B125 - EAST

SCALE: 1/4" = 1'-0"

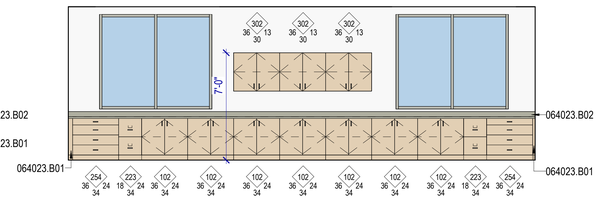

A3 LEARNING STUDIO B126 - EAST

SCALE: 1/4" = 1'-0"

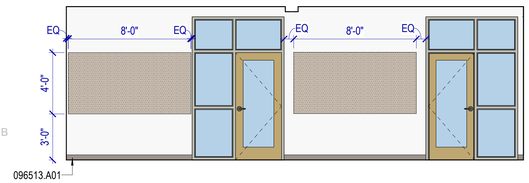

B1 LEARNING STUDIO B123 - W

SCALE: 1/4" = 1'-0"

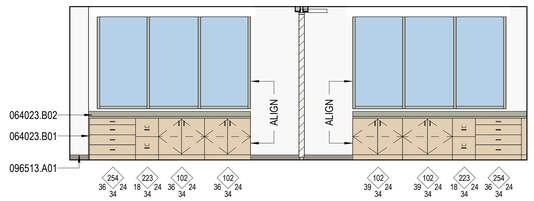

B2 LEARNING STUDIO B123 - EAST

SCALE: 1/4" = 1'-0"

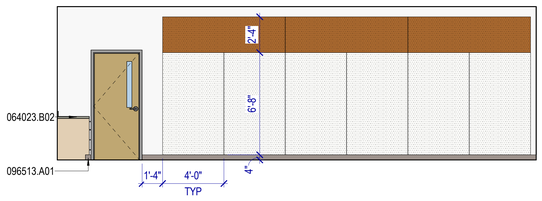

B3 LEARNING STUDIO B123 - S

SCALE: 1/4" = 1'-0"

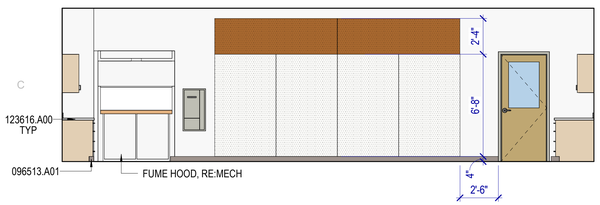

C1 SCIENCE / ART / CTE - TEACHING WALL

SCALE: 1/4" = 1'-0"

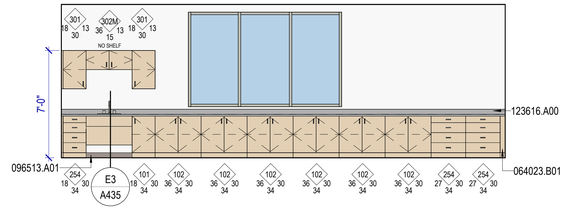

C2 SCIENCE/ART/CTE B127 - EAST

SCALE: 1/4" = 1'-0"

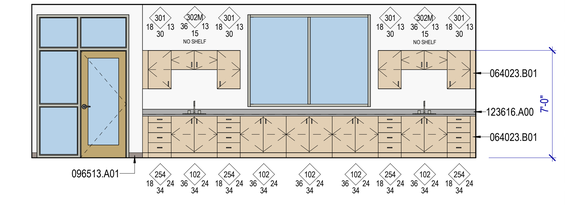

C3 SCIENCE/ART/CTE B127 - WEST

SCALE: 1/4" = 1'-0"

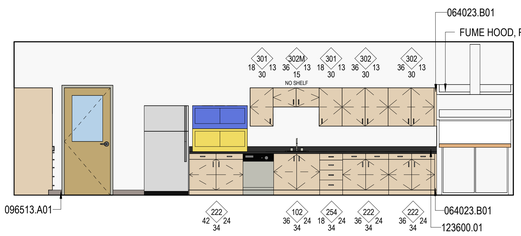

D1 PREP & STORAGE - S

SCALE: 1/4" = 1'-0"

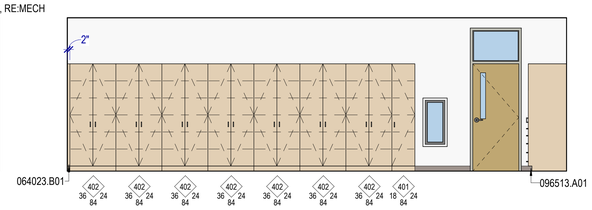

D2 PREP & STORAGE - N

SCALE: 1/4" = 1'-0"

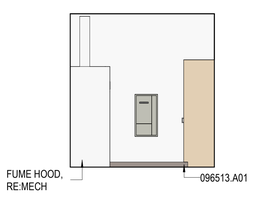

D3 PREP & STORAGE - W

SCALE: 1/4" = 1'-0"

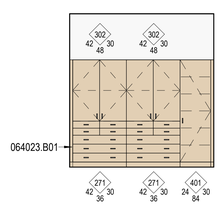

D4 PREP & STORAGE - E

SCALE: 1/4" = 1'-0"

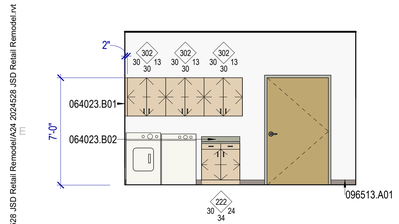

E1 LAUNDRY/RECEIVING A144 - WEST1

SCALE: 1/4" = 1'-0"

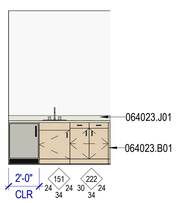

E2 WELLNESS B136 - EAST

SCALE: 1/4" = 1'-0"

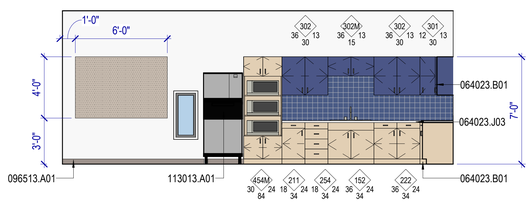

E3 BREAK ROOM - N

SCALE: 1/4" = 1'-0"

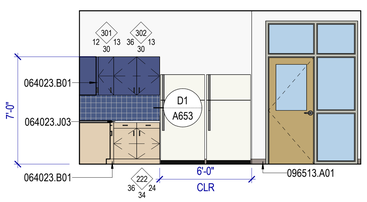

E4 BREAK ROOM - E

SCALE: 1/4" = 1'-0"

INTERIOR ELEVATIONS GENERAL NOTES

RE: North American Architectural Woodwork Standards v3.0 (NAAWS), Cabinet Design Series for cabinet types.

RE: G500 for Interior Wall Types.

RE: A640A & A640B for the Finish Schedule.

Dimensions shown to walls or casework are to finished face of wall or cabinet, UNO.

Equipment indicated by dashed lines is a general representation and shown for coordination purposes only.

Mechanical, electrical, plumbing and telecom rough-in locations are shown for general coordination purposes only. Refer to mechanical, electrical, plumbing and telecom drawings.

Countertops: 25" deep with 4" high backsplash, UNO. Provide sidesplashes at walls, tall cabinets or similar transitions.

Blocking: Provide blocking in walls at cabinets, wall-mounted accessories, equipment, display boards and similar items.

Finishes: Finishes are required on all exposed and semi-exposed surfaces, UNO. Wall elevations are not shown for walls where the Finish Schedule is deemed adequate to convey the intent.

Cabinet Locks: Provide locks on cabinet drawers and doors, keyed alike by room, UNO.

Casework Finishes: Provide laminate finishes on all exposed and semi-exposed surfaces as required by the specifications. Provide laminate finishes on concealed surfaces if required by the specifications. Refer to NAAWS Section 10.4.4 for definitions of exposed, semi-exposed and concealed surfaces.

LEGEND - INTERIOR ELEVATION

- TACKABLE WALL COVERING, TCK1 SEE DETAIL A3 / A435
- TACKABLE WALL COVERING, TCK2 SEE DETAIL A3 / A435
- MARKERBOARD, SEE DETAIL A3 / A435
- WALL TILE WT2
- GLAZING
- PLASTIC LAMINATE PL1
- PLASTIC LAMINATE PL2
- PLASTIC LAMINATE PL3
- WALLCOVERING WC2
- RIBBED WALL PANEL WP1
- WALLCOVERING WC1
- WALL TILE WT7
- TILE BASE TB1
- DISHWASHER, CFCI
- MICROWAVE, CFCI
- EYEWASH, RE: PLUMBING
- REFRIGERATOR, OFOI
- REFRIGERATOR, CFCI
- CHEMICAL STORAGE CABINETS
- COPIER, OFOI
- SINK, RE: PLUMBING
- DRINKING FOUNTAIN, RE: PLUMBING
- UNDERCOUNTER REFRIDGERATOR, CFCI
- TV MONITOR, RE: ELECTRICAL
- METAL LATERAL FILE STORAGE, OFOI
- DRYER & WASHER, CFCI

KEYNOTES

064023.B01	Filler panel
064023.B02	1-1/2" scheduled plastic laminate countertop w/ 4" backsplash
064023.J01	1-1/2" scheduled solid surface countertop w/ 4" backsplash
064023.J03	1-1/2" scheduled solid surface countertop w/o backsplash
096513.A01	RESILIENT BASE
113013.A01	Ice machine, floor mounted cfci
123600.01	1-1/2" scheduled epoxy resin countertop w/ 4" backsplash
123616.A00	METAL COUNTERTOPS

MHTN ARCHITECTS

MHTN Architects, Inc.
280 South 400 West
Suite 250
Salt Lake City, Utah 84101
Telephone (801) 595-6700
www.mhtn.com

JORDAN SCHOOL DISTRICT

JORDAN LEARNING CENTER

3706 WEST 9800 SOUTH
SOUTH JORDAN, UT 84009

©2023 MHTN ARCHITECTS, INC.

Confidentiality Notice:
This document is intended for use on the Project identified herein by individuals and companies involved in the design, permitting, bidding and construction of the Project. MHTN Architects, Inc. grants limited rights to distribute and reproduce this document for this express purpose only. Distribution, printing or copying this document for purposes other than those indicated is strictly prohibited. If a digital copy of this document is received in error, please delete it.

SEAL

STATE OF UTAH
CLIFFORD HOWARD CURTIS
No. 7394786-0301
3/8 AUGUST 2024
LICENSED ARCHITECT

MHTN PROJECT NO. 2024528

Original drawing is 30 x 42. Do not scale contents of this drawing.

REVISIONS
CONTRACTOR TO VERIFY DRAWINGS IN FIELD. USE REFLECT LAST REVISION DATE.

NO.	DATE	DESCRIPTION

ISSUE
CONSTRUCTION DOCUMENTS
AUGUST 29, 2024

SHEET NAME
INTERIOR ELEVATIONS

SHEET NUMBER
A413

Autodesk Docs://2024528 JSD Retail Remodel/A24 2024528 JSD Retail Remodel.rvt
8/28/2024 7:53:06 AM

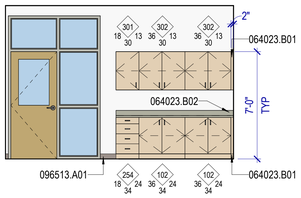

A1 AUDIOLOGY - E

SCALE: 1/4" = 1'-0"

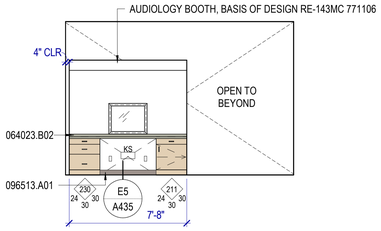

A2 AUDIOLOGY - S

SCALE: 1/4" = 1'-0"

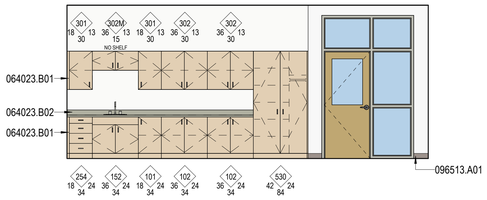

B1 TODDLER A131 - E

SCALE: 1/4" = 1'-0"

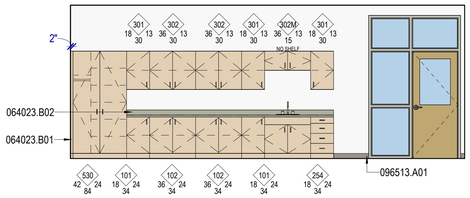

B2 TODDLER A138 - E

SCALE: 1/4" = 1'-0"

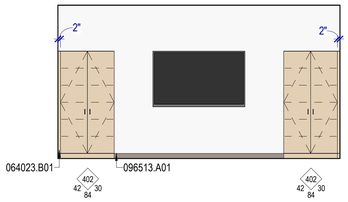

B3 COACH TEAM A139 - WEST

SCALE: 1/4" = 1'-0"

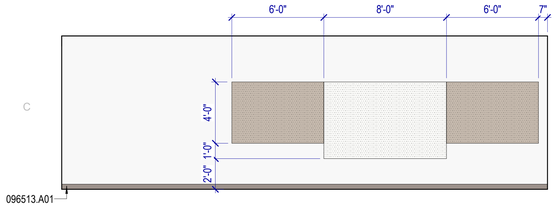

C1 COMMUNICATION - S

SCALE: 1/4" = 1'-0"

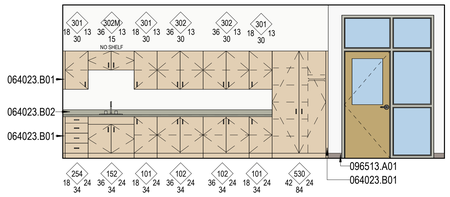

C2 COMMUNICATION - E

SCALE: 1/4" = 1'-0"

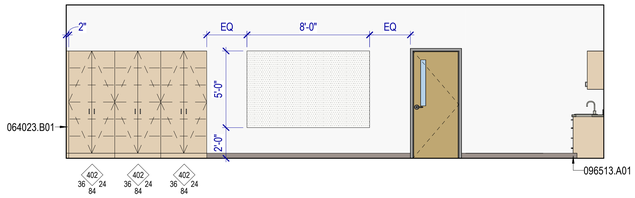

C3 COMMUNICATION - N

SCALE: 1/4" = 1'-0"

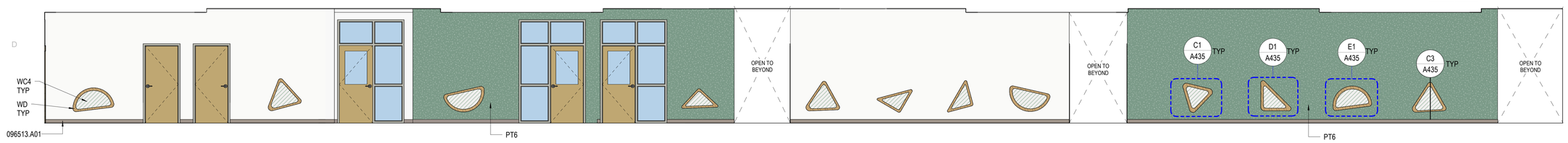

D1 CORRIDOR - E

SCALE: 1/4" = 1'-0"

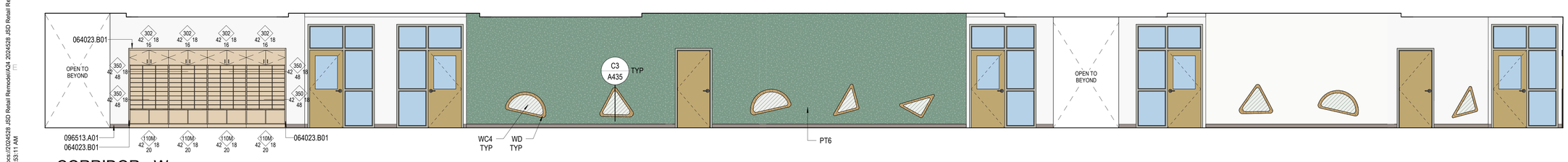

E1 CORRIDOR - W

SCALE: 1/4" = 1'-0"

KEYNOTES

064023.B01	Filler panel
064023.B02	1-1/2" scheduled plastic laminate countertop w/ 4" backsplash
096513.A01	RESILIENT BASE

INTERIOR ELEVATIONS GENERAL NOTES

RE: North American Architectural Woodwork Standards v3.0 (NAAWS), Cabinet Design Series for cabinet types.

RE: G500 for Interior Wall Types.

RE: A640A & A640B for the Finish Schedule.

Dimensions shown to walls or casework are to finished face of wall or cabinet, UNO.

Equipment indicated by dashed lines is a general representation and shown for coordination purposes only.

Mechanical, electrical, plumbing and telecom rough-in locations are shown for general coordination purposes only. Refer to mechanical, electrical, plumbing and telecom drawings.

Countertops: 25" deep with 4" high backsplash, UNO. Provide sidesplashes at walls, tall cabinets or similar transitions.

Blocking: Provide blocking in walls at cabinets, wall-mounted accessories, equipment, display boards and similar items.

Finishes: Finishes are required on all exposed and semi-exposed surfaces, UNO. Wall elevations are not shown for walls where the Finish Schedule is deemed adequate to convey the intent.

Cabinet Locks: Provide locks on cabinet drawers and doors, keyed alike by room, UNO.

Casework Finishes: Provide laminate finishes on all exposed and semi-exposed surfaces as required by the specifications. Provide laminate finishes on concealed surfaces if required by the specifications. Refer to NAAWS Section 10.4.4 for definitions of exposed, semi-exposed and concealed surfaces.

LEGEND - INTERIOR ELEVATION

- TACKABLE WALL COVERING, TCK1 SEE DETAIL A3 / A435
- TACKABLE WALL COVERING, TCK2 SEE DETAIL A3 / A435
- MARKERBOARD, SEE DETAIL A3 / A435
- WALL TILE WT2
- GLAZING
- PLASTIC LAMINATE PL1
- PLASTIC LAMINATE PL2
- PLASTIC LAMINATE PL3
- WALLCOVERING WC2
- RIBBED WALL PANEL WP1
- WALLCOVERING WC1
- WALL TILE WT7
- TILE BASE TB1
- DISHWASHER, CFCI
- MICROWAVE, CFCI
- EYEWASH, RE: PLUMBING
- REFRIGERATOR, OFOI
- REFRIGERATOR, CFCI
- CHEMICAL STORAGE CABINETS
- COPIER, OFOI
- SINK, RE: PLUMBING
- DRINKING FOUNTAIN, RE: PLUMBING
- UNDERCOUNTER REFRIDGERATOR, CFCI
- TV MONITOR, RE: ELECTRICAL
- METAL LATERAL FILE STORAGE, OFOI
- DRYER & WASHER, CFCI

MHTN ARCHITECTS

MHTN Architects, Inc.
280 South 400 West
Suite 250
Salt Lake City, Utah 84101
Telephone (801) 595-6700
www.mhtn.com

JORDAN SCHOOL DISTRICT

JORDAN LEARNING CENTER

3706 WEST 9800 SOUTH
SOUTH JORDAN, UT 84009

©2023 MHTN ARCHITECTS, INC.

Confidentiality Notice:
This document is intended for use on the Project identified herein by individuals and companies involved in the design, permitting, bidding and construction of the Project. MHTN Architects, Inc. grants limited rights to distribute and reproduce this document for this express purpose only. Distribution, printing or copying this document for purposes other than those indicated is strictly prohibited. If a digital copy of this document is received in error, please delete it.

SEAL

STATE OF UTAH
CLIFFORD HOWARD CURTIS
No. 7394786-0301
2/4 AUGUST 2024
LICENSED ARCHITECT

MHTN PROJECT NO. 2024528

Original drawing is 30 x 42. Do not scale contents of this drawing.

REVISIONS
CONTRACTOR TO VERIFY DRAWINGS IN FIELD. USE REFLECT LAST REVISION DATE.

NO.	DATE	DESCRIPTION

ISSUE
CONSTRUCTION DOCUMENTS
AUGUST 29, 2024

SHEET NAME
INTERIOR ELEVATIONS

SHEET NUMBER
A414

Autodesk Docs://2024528 JSD Retail Remodel/A24 2024528 JSD Retail Remodel.rvt
8/28/2024 7:53:11 AM

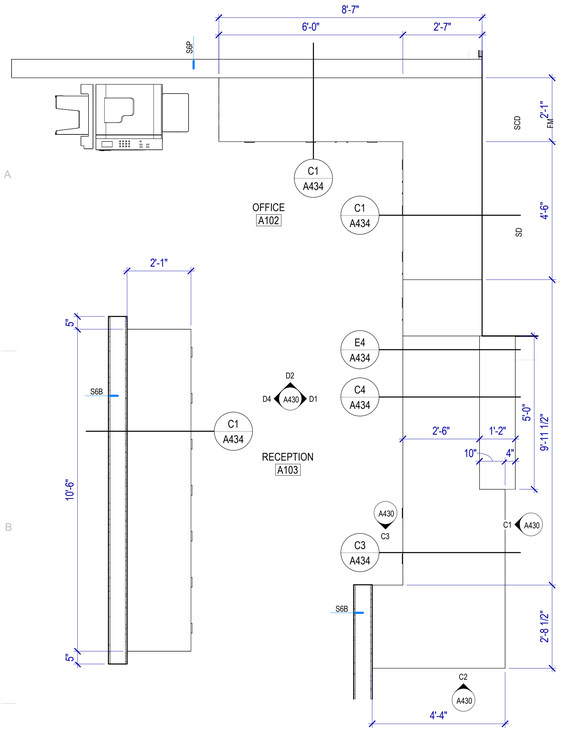

B1 RECEPTION A103 DESK

SCALE: 1/2" = 1'-0"

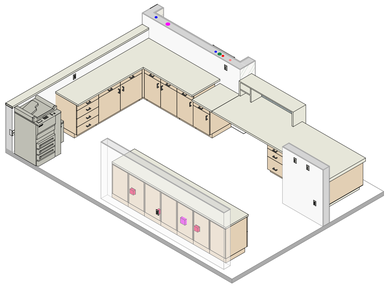

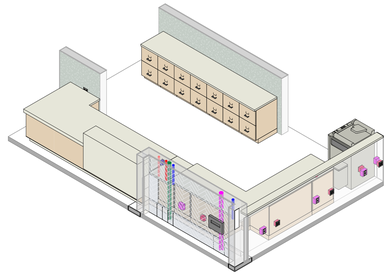

RECEPTION DESK A103 AXONOMETRIC

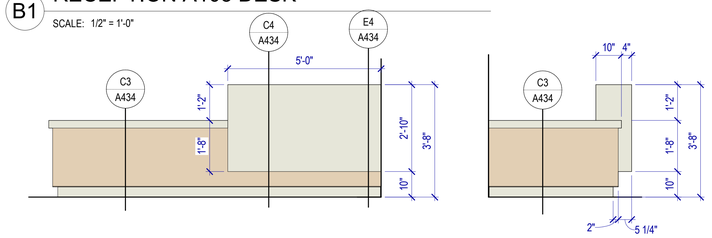

C1 RECEPTION DESK A103 - F1

SCALE: 1/2" = 1'-0"

C2 RECEPTION DESK A103 - F2

SCALE: 1/2" = 1'-0"

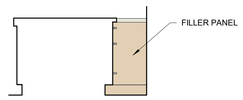

C3 RECEPTOIN A103 DESK - S

SCALE: 1/2" = 1'-0"

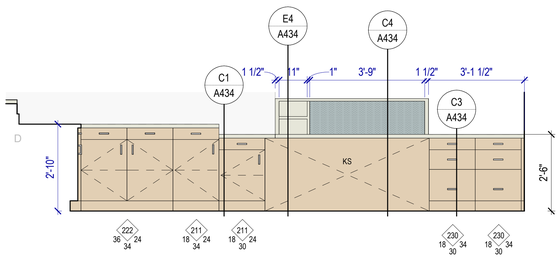

D1 RECEPTION A103 DESK - E

SCALE: 1/2" = 1'-0"

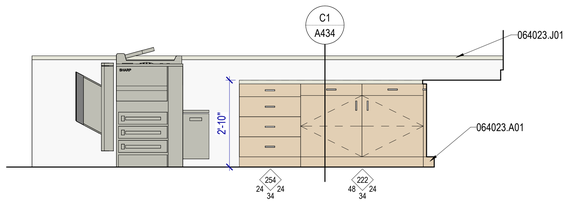

D2 RECEPTION A102 DESK - N

SCALE: 1/2" = 1'-0"

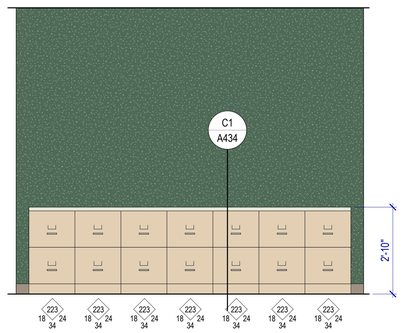

D4 RECEPTION A103 DESK - W

SCALE: 1/2" = 1'-0"

CASEWORK GENERAL NOTES

Verify in Field (VIF): Field verify all dimensions and conditions before fabrication.

Upper Cabinet Clearance: 12" minimum clear inside dimension, UNO.

Electrical and Data Coordination: Coordinate electrical and data device locations with millwork.

Locks: Provide locks on cabinet drawers and doors, keyed alike by room, UNO.

Grommets: Locate as directed by Owner after installation.

Cabinet Design Series

- Provide cabinets with integral finished ends and scribes at wall to wall installations not exceeding 1-1/2 inches in width.
- Where cabinets meet walls or other cabinets, provide filler panels, of sufficient width, but not exceeding 1-1/2 inches, to allow doors with pulls to swing a minimum of 90 degrees and to prevent drawers from hitting adjacent door or drawer pulls.
- Hardware and accessories shall be as provided for in these standards.

CDS are subdivided as follows:

Base Cabinets w/o Drawers	100 Series
Base Cabinets w/ Drawers	200 Series
Wall Hung Cabinets	300 Series
Tall Storage Cabinets	400 Series
Tall Wardrobe Cabinets	500 Series
Library Cabinets	600 Series
Moveable Cabinets	700 Series

General Notes

- 100 or 200 Series cabinets may be converted into moveable cabinets by prefixing a "7" to the number. (Example: 7-102-36"x 30"x 18" [7-102-914 mm x 762 mm x 457 mm]).
- Moveable cabinets shall be equipped with adequate approved casters for the intended load capacity.
- CDS #'s 728, 729, 735, 736, 737, 738, and 739 require metal angle reinforced corners.
- Carts and rolling tall storage cabinets with doors, lacking any horizontal and/or vertical stabilizing dividers, require a diaphragm bottom; specifically CDS #'s 702, 712, 716, 722, 743,744, 746, 747, 750, and 751.
- Wardrobe cabinets (500 Series) with doors require a framed mirror on one door, and cabinets # 533 and 534 require a paper roller/cutter and slide out tilting paper shelves.
- Cart storage cabinets are required to have hardwood side guides, specifically CDS #'s 160, 161, and 162.
- Ceramics drying cabinets are required to have galvanized metal frame shelves with wire mesh, specifically CDS #'s 198 199, and 459.
- File drawers require full extension slides and a file hanging system, specifically CDS #'s 223, 224, 230, 231, 240, 242, 253, 255, 531, 532, and 533.
- Wardrobe cabinets are required to have a shelf, pole, and framed mirror (without pin tray) when closed with hinged doors, specifically CDS #'s 501, 511, 512, 522, 530, 531, 532, and 552.
- Wardrobe cabinets are required to have a roll paper dispenser/cutter, specifically CDS #'s 533 and 534.

	SS1		TCK1
	PL1		PL2
	QT1		WP2
KS	KNEE SPACE		

MHTN ARCHITECTS
MHTN Architects, Inc.
280 South 400 West
Suite 250
Salt Lake City, Utah 84101
Telephone (801) 595-6700
www.mhtn.com

JORDAN SCHOOL DISTRICT

JORDAN LEARNING CENTER
3706 WEST 9800 SOUTH
SOUTH JORDAN, UT 84009

©2023 MHTN ARCHITECTS, INC.
Confidentiality Notice:
This document is intended for use on the Project identified herein by individuals and companies involved in the design, permitting, bidding and construction of the Project. MHTN Architects, Inc. grants limited rights to distribute and reproduce this document for this express purpose only. Distribution, printing or copying this document for purposes other than those indicated is strictly prohibited. If a digital copy of this document is received in error, please delete it.

SEAL

MHTN PROJECT NO. 2024528

Original drawing is 30 x 42. Do not scale contents of this drawing.

REVISIONS
CONTRACTOR TO VERIFY DRAWINGS IN FIELD USE REFLECT LAST REVISION DATE.

NO.	DATE	DESCRIPTION

ISSUE
CONSTRUCTION DOCUMENTS
AUGUST 29, 2024

SHEET NAME
CASEWORK DETAILS

SHEET NUMBER
A430

Autodesk Docs://2024528 JSD Retail Remodel/A24 2024528 JSD Retail Remodel.rvt
8/28/2024 7:53:16 AM

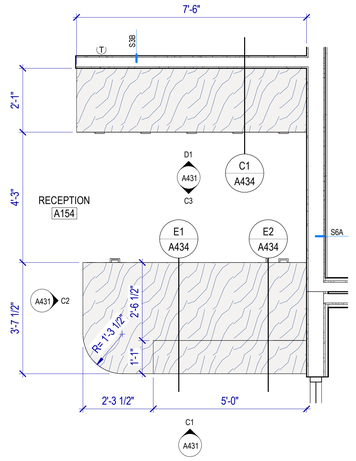

B1 RECEPTION A154 DESK

SCALE: 1/2" = 1'-0"

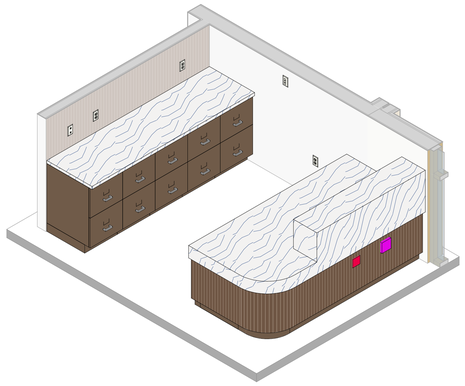

RECEPTION DESK A154 AXONOMETRIC

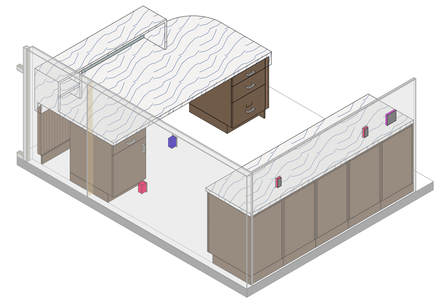

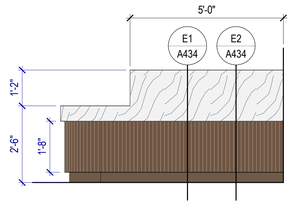

C1 RECEPTION A154 DESK - S

SCALE: 1/2" = 1'-0"

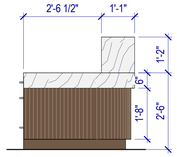

C2 RECEPTION A154 DESK - W

SCALE: 1/2" = 1'-0"

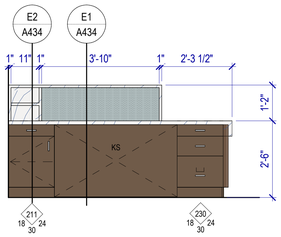

C3 RECEPTION A154 DESK - N

SCALE: 1/2" = 1'-0"

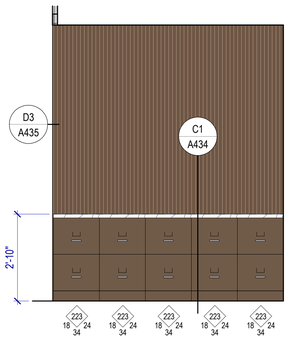

D1 RECEPTION A154 DESK BACK - S

SCALE: 1/2" = 1'-0"

CASEWORK GENERAL NOTES

Verify in Field (VIF): Field verify all dimensions and conditions before fabrication.

Upper Cabinet Clearance: 12" minimum clear inside dimension, UNO.

Electrical and Data Coordination: Coordinate electrical and data device locations with millwork.

Locks: Provide locks on cabinet drawers and doors, keyed alike by room, UNO.

Grommets: Locate as directed by Owner after installation.

Cabinet Design Series

- Provide cabinets with integral finished ends and scribes at wall to wall installations not exceeding 1-1/2 inches in width.
- Where cabinets meet walls or other cabinets, provide filler panels, of sufficient width, but not exceeding 1-1/2 inches, to allow doors with pulls to swing a minimum of 90 degrees and to prevent drawers from hitting adjacent door or drawer pulls.
- Hardware and accessories shall be as provided for in these standards.

CDS are subdivided as follows:

Base Cabinets w/o Drawers	100 Series
Base Cabinets w/ Drawers	200 Series
Wall Hung Cabinets	300 Series
Tall Storage Cabinets	400 Series
Tall Wardrobe Cabinets	500 Series
Library Cabinets	600 Series
Moveable Cabinets	700 Series

General Notes

- 100 or 200 Series cabinets may be converted into moveable cabinets by prefixing a "7" to the number. (Example: 7-102-36"x 30"x 18" [7-102-914 mm x 762 mm x 457 mm]).
- Moveable cabinets shall be equipped with adequate approved casters for the intended load capacity.
- CDS #'s 728, 729, 735, 736, 737, 738, and 739 require metal angle reinforced corners.
- Carts and rolling tall storage cabinets with doors, lacking any horizontal and/or vertical stabilizing dividers, require a diaphragm bottom; specifically CDS #'s 702, 712, 716, 722, 743,744, 746, 747, 750, and 751.
- Wardrobe cabinets (500 Series) with doors require a framed mirror on one door, and cabinets # 533 and 534 require a paper roller/cutter and slide out tilting paper shelves.
- Cart storage cabinets are required to have hardwood side guides, specifically CDS #'s 160, 161, and 162.
- Ceramics drying cabinets are required to have galvanized metal frame shelves with wire mesh, specifically CDS #'s 198 199, and 459.
- File drawers require full extension slides and a file hanging system, specifically CDS #'s 223, 224, 230, 231, 240, 242, 253, 255, 531, 532, and 533.
- Wardrobe cabinets are required to have a shelf, pole, and framed mirror (without pin tray) when closed with hinged doors, specifically CDS #'s 501, 511, 512, 522, 530, 531, 532, and 552.
- Wardrobe cabinets are required to have a roll paper dispenser/cutter, specifically CDS #'s 533 and 534.

	SS1		TCK1
	PL1		PL2
	QT1		WP2
KS	KNEE SPACE		

MHTN ARCHITECTS
MHTN Architects, Inc.
280 South 400 West
Suite 250
Salt Lake City, Utah 84101
Telephone (801) 595-6700
www.mhtn.com

JORDAN SCHOOL DISTRICT

JORDAN LEARNING CENTER

3706 WEST 9800 SOUTH
SOUTH JORDAN, UT 84009

©2023 MHTN ARCHITECTS, INC.

Confidentiality Notice:
This document is intended for use on the Project identified herein by individuals and companies involved in the design, permitting, bidding and construction of the Project. MHTN Architects, Inc. grants limited rights to distribute and reproduce this document for this express purpose only. Distribution, printing or copying this document for purposes other than those indicated is strictly prohibited. If a digital copy of this document is received in error, please delete it.

SEAL

MHTN PROJECT NO. 2024528

Original drawing is 30 x 42. Do not scale contents of this drawing.

REVISIONS
CONTRACTOR TO VERIFY DRAWINGS IN FIELD USE REFLECT LAST REVISION DATE.

NO.	DATE	DESCRIPTION

ISSUE
CONSTRUCTION DOCUMENTS
AUGUST 29, 2024

SHEET NAME
CASEWORK DETAILS

SHEET NUMBER
A431

Autodesk Docs://2024528 JSD Retail Remodel/A24 2024528 JSD Retail Remodel.rvt
8/28/2024 7:53:19 AM

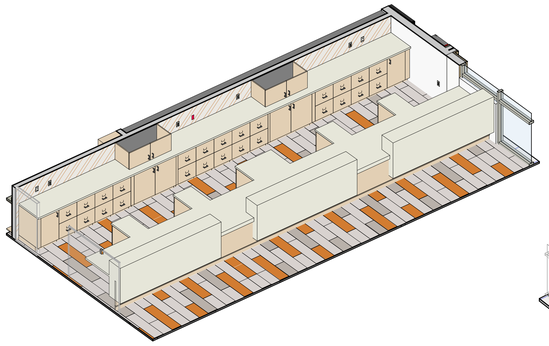

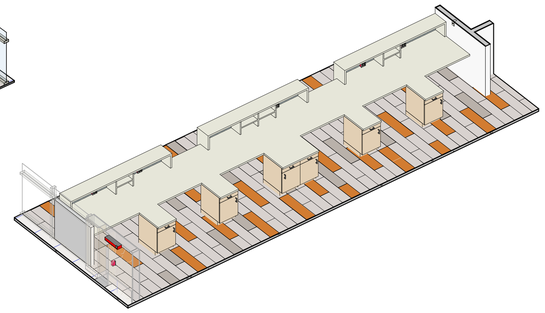

RECEPTION DESK AXONOMETRIC

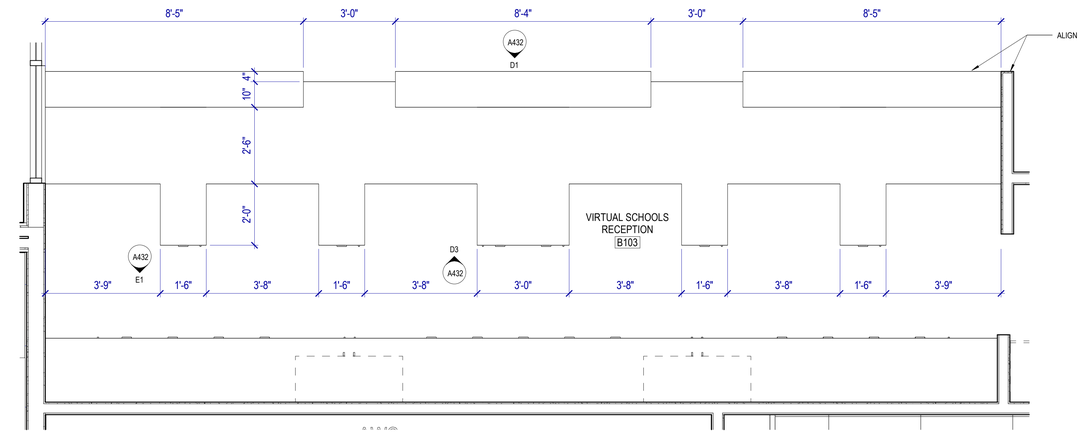

C1 VIRTUAL SCHOOL RECEPTION DESK

SCALE: 1/2" = 1'-0"

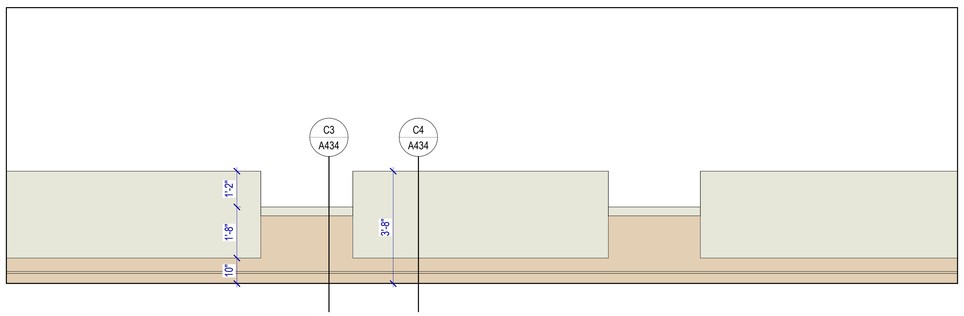

D1 RECEPTION DESK ELEVATION

SCALE: 1/2" = 1'-0"

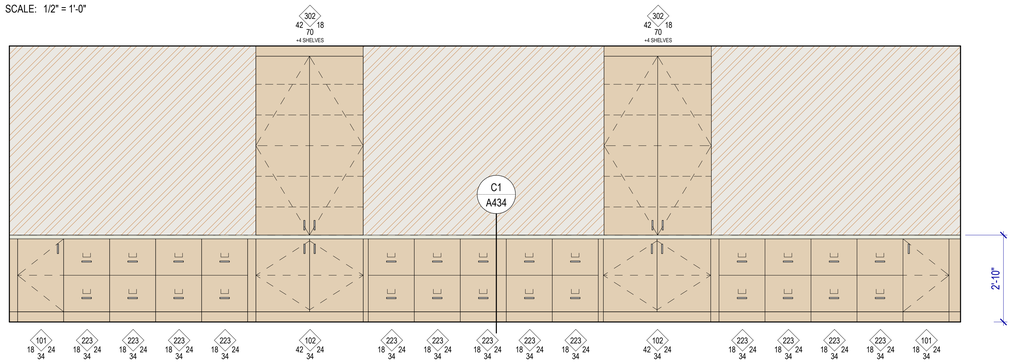

E1 VS RECEPTION DESK BACK WALL

SCALE: 1/2" = 1'-0"

D3 RECEPTION DESK ELEVATION

SCALE: 1/2" = 1'-0"

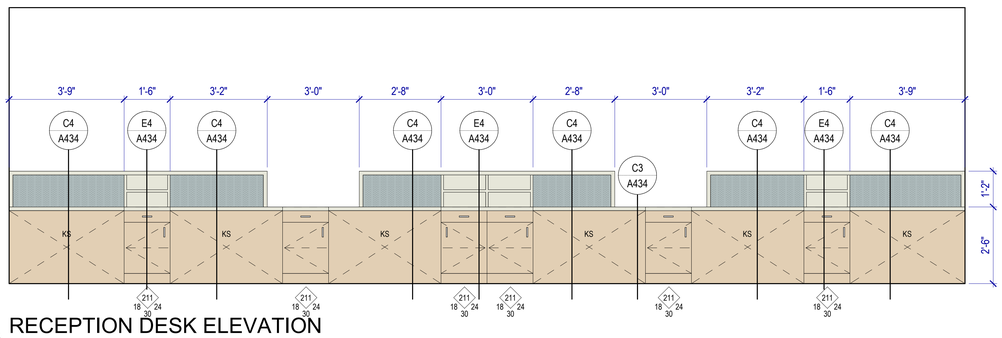

CASEWORK GENERAL NOTES

Verify in Field (VIF): Field verify all dimensions and conditions before fabrication.

Upper Cabinet Clearance: 12" minimum clear inside dimension, UNO.

Electrical and Data Coordination: Coordinate electrical and data device locations with millwork.

Locks: Provide locks on cabinet drawers and doors, keyed alike by room, UNO.

Grommets: Locate as directed by Owner after installation.

Cabinet Design Series

- Provide cabinets with integral finished ends and scribes at wall to wall installations not exceeding 1-1/2 inches in width.
- Where cabinets meet walls or other cabinets, provide filler panels, of sufficient width, but not exceeding 1-1/2 inches, to allow doors with pulls to swing a minimum of 90 degrees and to prevent drawers from hitting adjacent door or drawer pulls.
- Hardware and accessories shall be as provided for in these standards.

CDS are subdivided as follows:

Base Cabinets w/o Drawers	100 Series
Base Cabinets w/ Drawers	200 Series
Wall Hung Cabinets	300 Series
Tall Storage Cabinets	400 Series
Tall Wardrobe Cabinets	500 Series
Library Cabinets	600 Series
Moveable Cabinets	700 Series

General Notes

- 100 or 200 Series cabinets may be converted into moveable cabinets by prefixing a "7" to the number. (Example: 7-102-36"x 30"x 18" [7-102-914 mm x 762 mm x 457 mm]).
- Moveable cabinets shall be equipped with adequate approved casters for the intended load capacity.
- CDS #'s 728, 729, 735, 736, 737, 738, and 739 require metal angle reinforced corners.
- Carts and rolling tall storage cabinets with doors, lacking any horizontal and/or vertical stabilizing dividers, require a diaphragm bottom; specifically CDS #'s 702, 712, 716, 722, 743,744, 746, 747, 750, and 751.
- Wardrobe cabinets (500 Series) with doors require a framed mirror on one door, and cabinets # 533 and 534 require a paper roller/cutter and slide out tilting paper shelves.
- Cart storage cabinets are required to have hardwood side guides, specifically CDS #'s 160, 161, and 162.
- Ceramics drying cabinets are required to have galvanized metal frame shelves with wire mesh, specifically CDS #'s 198 199, and 459.
- File drawers require full extension slides and a file hanging system, specifically CDS #'s 223, 224, 230, 231, 240, 242, 253, 255, 531, 532, and 533.
- Wardrobe cabinets are required to have a shelf, pole, and framed mirror (without pin tray) when closed with hinged doors, specifically CDS #'s 501, 511, 512, 522, 530, 531, 532, and 552.
- Wardrobe cabinets are required to have a roll paper dispenser/cutter, specifically CDS #'s 533 and 534.

	SS1		TCK1
	PL1		PL2
	QT1		WP2
KS	KNEE SPACE		

MHTN ARCHITECTS

MHTN Architects, Inc.
280 South 400 West
Suite 250
Salt Lake City, Utah 84101
Telephone (801) 595-6700
www.mhtn.com

JORDAN SCHOOL DISTRICT

JORDAN LEARNING CENTER

3706 WEST 9800 SOUTH
SOUTH JORDAN, UT 84009

©2023 MHTN ARCHITECTS, INC.

Confidentiality Notice:
This document is intended for use on the Project identified herein by individuals and companies involved in the design, permitting, bidding and construction of the Project. MHTN Architects, Inc. grants limited rights to distribute and reproduce this document for this express purpose only. Distribution, printing or copying this document for purposes other than those indicated is strictly prohibited. If a digital copy of this document is received in error, please delete it.

SEAL

MHTN PROJECT NO. 2024528

Original drawing is 30 x 42. Do not scale contents of this drawing.

REVISIONS
CONTRACTOR TO VERIFY DRAWINGS IN FIELD USE REFLECT LAST REVISION DATE.

NO.	DATE	DESCRIPTION

ISSUE
CONSTRUCTION DOCUMENTS
AUGUST 29, 2024

SHEET NAME
CASEWORK DETAILS

SHEET NUMBER
A432

Autodesk Docs://2024528 JSD Retail Remodel/A24 2024528 JSD Retail Remodel.rvt
8/28/2024 7:53:23 AM

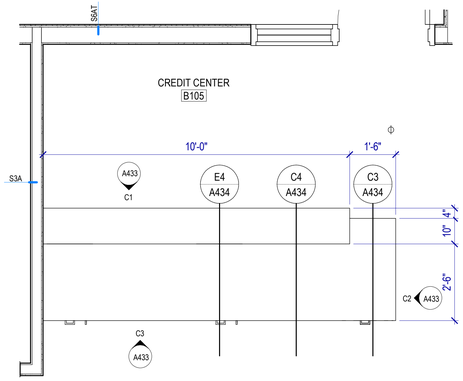

B1 RECEPTION DESK B105

SCALE: 1/2" = 1'-0"

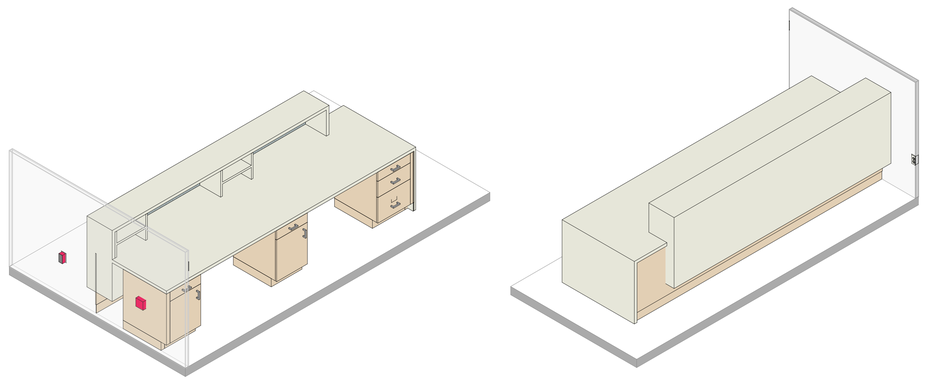

RECEPTION DESK B105 AXONOMETRIC

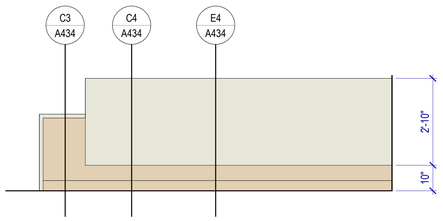

C1 RECEPTION B105 DESK - N

SCALE: 1/2" = 1'-0"

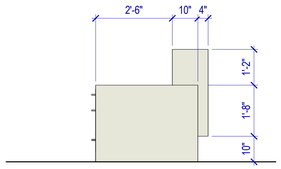

C2 RECEPTION B105 DESK - E

SCALE: 1/2" = 1'-0"

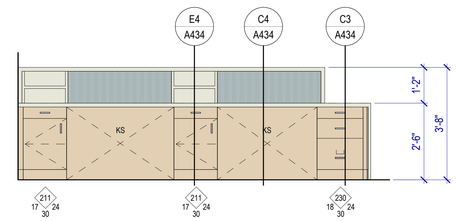

C3 RECEPTION B105 DESK - S

SCALE: 1/2" = 1'-0"

CASEWORK GENERAL NOTES

Verify in Field (VIF): Field verify all dimensions and conditions before fabrication.

Upper Cabinet Clearance: 12" minimum clear inside dimension, UNO.

Electrical and Data Coordination: Coordinate electrical and data device locations with millwork.

Locks: Provide locks on cabinet drawers and doors, keyed alike by room, UNO.

Grommets: Locate as directed by Owner after installation.

Cabinet Design Series

- Provide cabinets with integral finished ends and scribes at wall to wall installations not exceeding 1-1/2 inches in width.
- Where cabinets meet walls or other cabinets, provide filler panels, of sufficient width, but not exceeding 1-1/2 inches, to allow doors with pulls to swing a minimum of 90 degrees and to prevent drawers from hitting adjacent door or drawer pulls.
- Hardware and accessories shall be as provided for in these standards.

CDS are subdivided as follows:

Base Cabinets w/o Drawers	100 Series
Base Cabinets w/ Drawers	200 Series
Wall Hung Cabinets	300 Series
Tall Storage Cabinets	400 Series
Tall Wardrobe Cabinets	500 Series
Library Cabinets	600 Series
Moveable Cabinets	700 Series

General Notes

- 100 or 200 Series cabinets may be converted into moveable cabinets by prefixing a "7" to the number. (Example: 7-102-36"x 30"x 18" [7-102-914 mm x 762 mm x 457 mm]).
- Moveable cabinets shall be equipped with adequate approved casters for the intended load capacity.
- CDS #'s 728, 729, 735, 736, 737, 738, and 739 require metal angle reinforced corners.
- Carts and rolling tall storage cabinets with doors, lacking any horizontal and/or vertical stabilizing dividers, require a diaphragm bottom; specifically CDS #'s 702, 712, 716, 722, 743,744, 746, 747, 750, and 751.
- Wardrobe cabinets (500 Series) with doors require a framed mirror on one door, and cabinets # 533 and 534 require a paper roller/cutter and slide out tilting paper shelves.
- Cart storage cabinets are required to have hardwood side guides, specifically CDS #'s 160, 161, and 162.
- Ceramics drying cabinets are required to have galvanized metal frame shelves with wire mesh, specifically CDS #'s 198 199, and 459.
- File drawers require full extension slides and a file hanging system, specifically CDS #'s 223, 224, 230, 231, 240, 242, 253, 255, 531, 532, and 533.
- Wardrobe cabinets are required to have a shelf, pole, and framed mirror (without pin tray) when closed with hinged doors, specifically CDS #'s 501, 511, 512, 522, 530, 531, 532, and 552.
- Wardrobe cabinets are required to have a roll paper dispenser/cutter, specifically CDS #'s 533 and 534.

	SS1		TCK1
	PL1		PL2
	QT1		WP2
KS	KNEE SPACE		

MHTN ARCHITECTS
MHTN Architects, Inc.
280 South 400 West
Suite 250
Salt Lake City, Utah 84101
Telephone (801) 595-6700
www.mhtn.com

JORDAN SCHOOL DISTRICT

JORDAN LEARNING CENTER

3706 WEST 9800 SOUTH
SOUTH JORDAN, UT 84009

©2023 MHTN ARCHITECTS, INC.

Confidentiality Notice
This document is intended for use on the Project identified herein by individuals and companies involved in the design, permitting, bidding and construction of the Project. MHTN Architects, Inc. grants limited rights to distribute and reproduce this document for such purposes. Any other distribution, copying or reproduction of this document for purposes other than those indicated is strictly prohibited. If a digital copy of this document is received in error, please delete it.

SEAL

MHTN PROJECT NO. 2024528

Original drawing is 30 x 42. Do not scale contents of this drawing.

REVISIONS
CONTRACTOR TO VERIFY DRAWINGS IN FIELD USE REFLECT LAST REVISION DATE.

NO.△	DATE	DESCRIPTION

ISSUE
CONSTRUCTION DOCUMENTS
AUGUST 29, 2024

SHEET NAME
CASEWORK DETAILS

SHEET NUMBER
A433

Autodesk Docs://2024528 JSD Retail Remodel/A24 2024528 JSD Retail Remodel.rvt
8/29/2024 7:53:26 AM

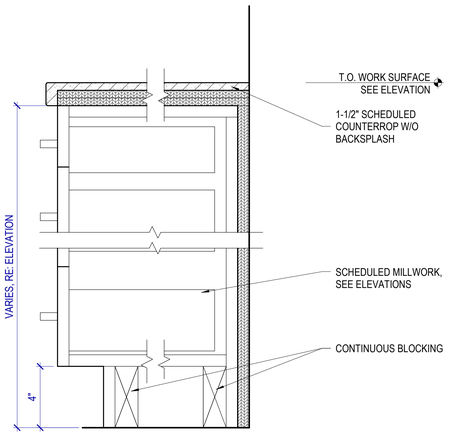

C1 RECEPTION DESK DETAIL

SCALE: 3" = 1'-0"

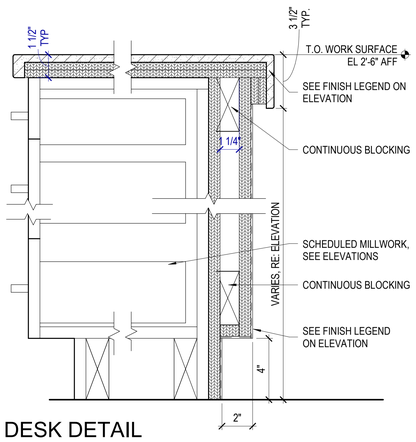

C3 RECEPTION DESK DETAIL

SCALE: 3" = 1'-0"

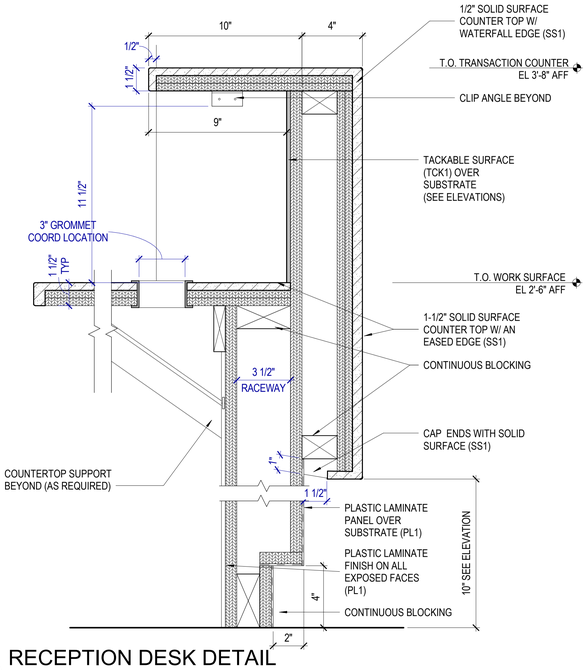

C4 RECEPTION DESK DETAIL

SCALE: 3" = 1'-0"

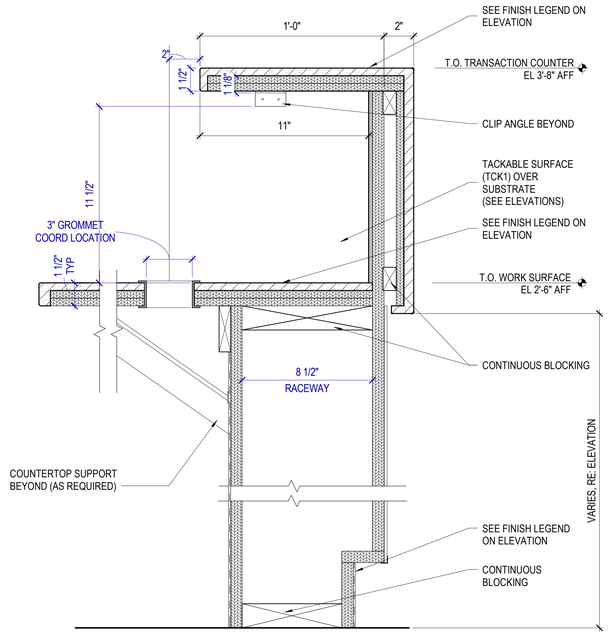

E1 RECEPTION DESK DETAIL

SCALE: 3" = 1'-0"

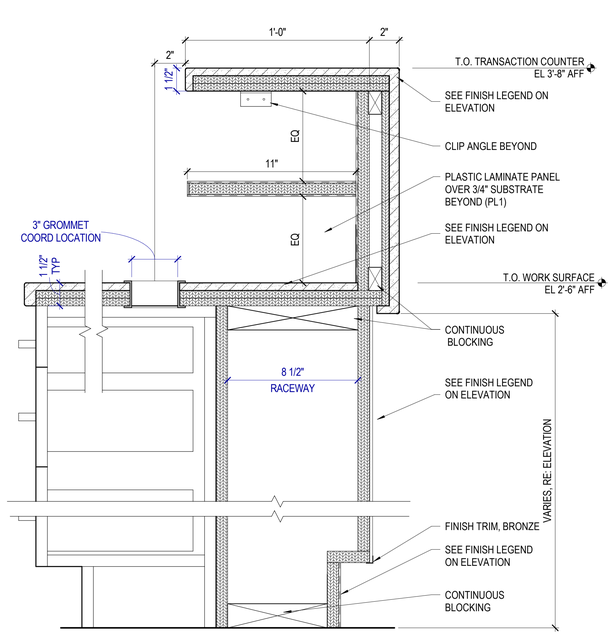

E2 RECEPTION DESK DETAIL

SCALE: 3" = 1'-0"

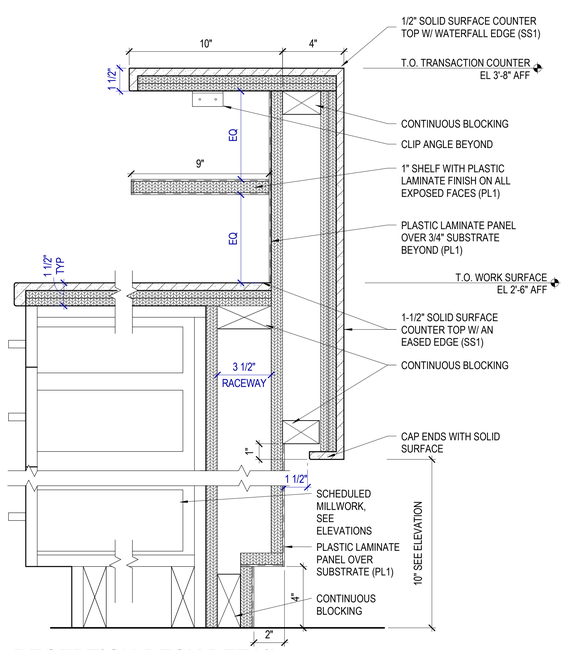

E4 RECEPTION DESK DETAIL

SCALE: 3" = 1'-0"

MHTN ARCHITECTS
MHTN Architects, Inc.
280 South 400 West
Suite 250
Salt Lake City, Utah 84101
Telephone (801) 595-6700
www.mhtn.com

JORDAN SCHOOL DISTRICT

JORDAN LEARNING CENTER

3706 WEST 9800 SOUTH
SOUTH JORDAN, UT 84009

©2023 MHTN ARCHITECTS, INC.
Confidentiality Notice:
This document is intended for use on the Project identified herein by individuals and companies involved in the design, permitting, bidding and construction of the Project. MHTN Architects, Inc. grants limited rights to distribute and reproduce this document for this express purpose only. Distribution, printing or copying this document for purposes other than those indicated is strictly prohibited. If a digital copy of this document is received in error, please delete it.

SEAL

MHTN PROJECT NO. 2024528

Original drawing is 30 x 42. Do not scale contents of this drawing.

REVISIONS
CONTRACTOR TO VERIFY DRAWINGS IN FIELD. USE REFLECT LAST REVISION DATE.

NO.	DATE	DESCRIPTION

ISSUE
CONSTRUCTION DOCUMENTS
AUGUST 29, 2024

SHEET NAME
CASEWORK DETAILS

SHEET NUMBER
A434

Autodesk Docs://2024528 JSD Retail Remodel/A24 2024528 JSD Retail Remodel.rvt
8/28/2024 7:53:38 AM

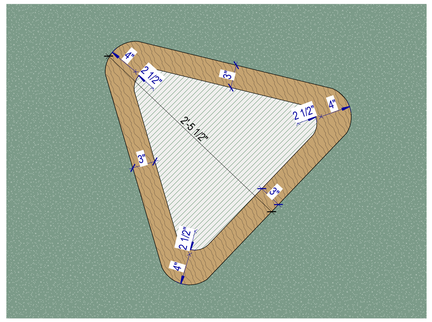

C1 CUSTOM FRAME DETAIL

SCALE: 1 1/2" = 1'-0"

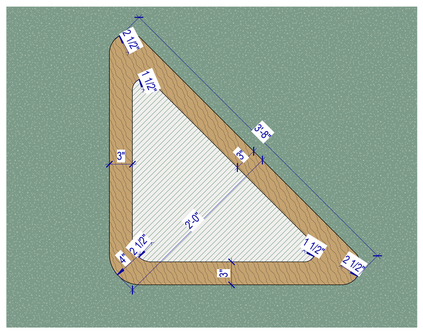

D1 CUSTOM FRAME DETAIL

SCALE: 1 1/2" = 1'-0"

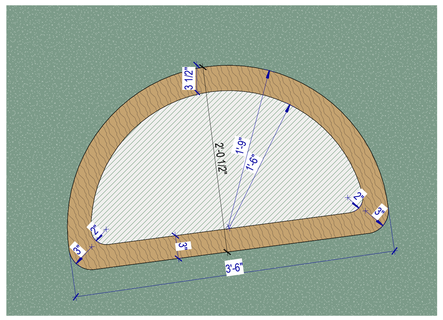

E1 CUSTOM FRAME DETAIL

SCALE: 1 1/2" = 1'-0"

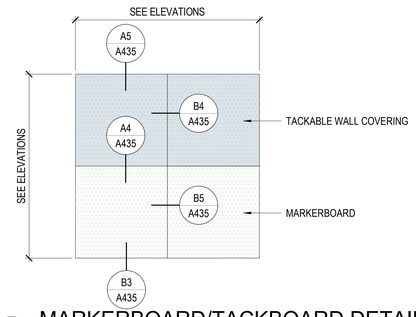

A3 MARKERBOARD/TACKBOARD DETAIL

SCALE: 1/4" = 1'-0"

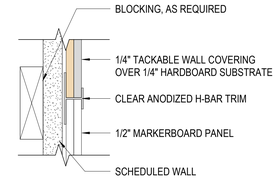

A4 DETAIL

SCALE: 6" = 1'-0"

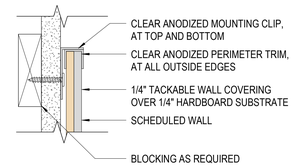

A5 DETAIL

SCALE: 6" = 1'-0"

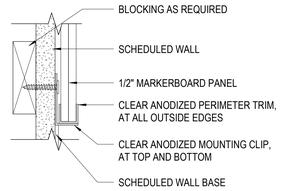

B3 DETAIL

SCALE: 6" = 1'-0"

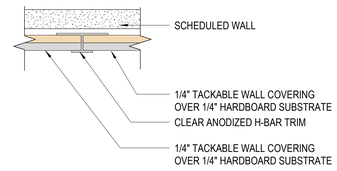

B4 DETAIL

SCALE: 6" = 1'-0"

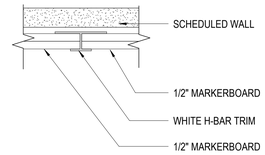

B5 DETAIL

SCALE: 6" = 1'-0"

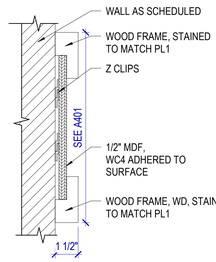

C3 CUSTOM WALL FRAME

SCALE: 3" = 1'-0"

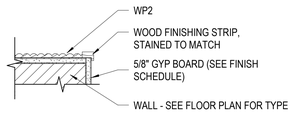

D3 VENEER PANEL FINISH DETAIL

SCALE: 3" = 1'-0"

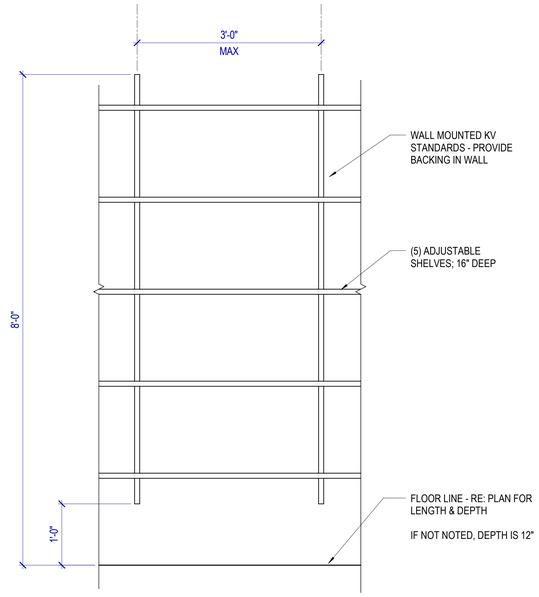

D5 ADJUSTABLE WALL SHELVING

SCALE: 1" = 1'-0"

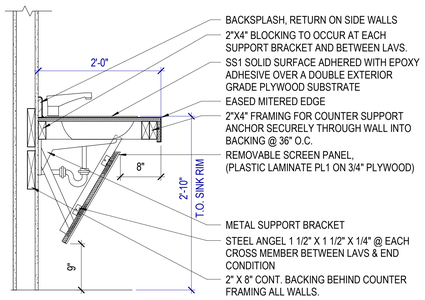

E3 ADA SINK

SCALE: 1" = 1'-0"

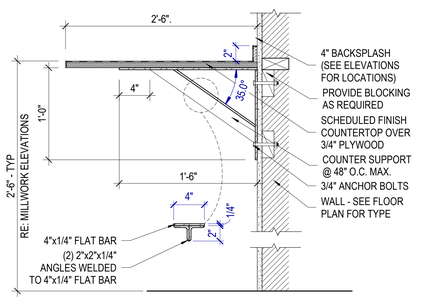

E4 COUNTERTOP W/ BRACKET

SCALE: 1 1/2" = 1'-0"

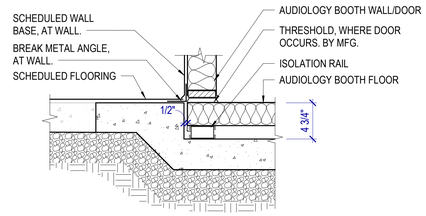

E5 AUDIOLOGY BOOTH DETAIL

SCALE: 1 1/2" = 1'-0"

MHTN ARCHITECTS
MHTN Architects, Inc.
280 South 400 West
Suite 250
Salt Lake City, Utah 84101
Telephone (801) 595-6700
www.mhtn.com

JORDAN SCHOOL DISTRICT

JORDAN LEARNING CENTER

3706 WEST 9800 SOUTH
SOUTH JORDAN, UT 84009

©2023 MHTN ARCHITECTS, INC.
Confidentiality Notice:
This document is intended for use on the Project identified herein by individuals and companies involved in the design, permitting, bidding and construction of the Project. MHTN Architects, Inc. grants limited rights to distribute and reproduce this document for this express purpose only. Distribution, printing or copying this document for purposes other than those indicated is strictly prohibited. If a digital copy of this document is received in error, please delete it.

SEAL

MHTN PROJECT NO. 2024528

Original drawing is 30 x 42. Do not scale contents of this drawing.

REVISIONS
CONTRACTOR TO VERIFY DRAWINGS IN FIELD USE REFLECT LAST REVISION DATE:

NO.△	DATE	DESCRIPTION

ISSUE
CONSTRUCTION DOCUMENTS
AUGUST 29, 2024

SHEET NAME
INTERIOR DETAILS

SHEET NUMBER
A435

Autodesk Docs://2024528 JSD Retail Remodel/A24 2024528 JSD Retail Remodel.rvt
8/28/2024 7:33:30 AM

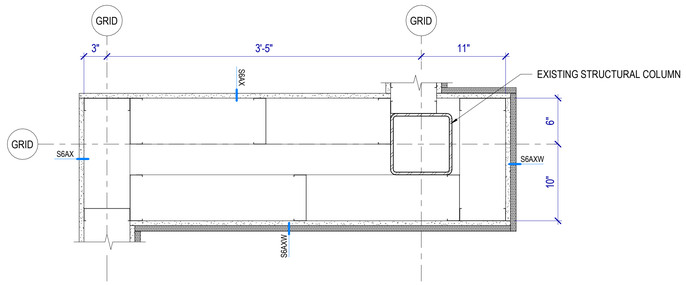

C1 PLAN DETAIL

SCALE: 1 1/2" = 1'-0"

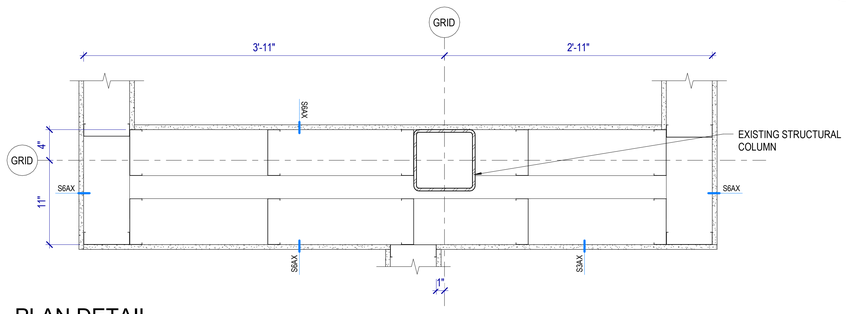

C3 PLAN DETAIL

SCALE: 1 1/2" = 1'-0"

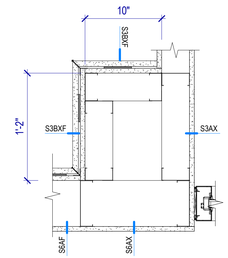

C2 PLAN DETAIL

SCALE: 1 1/2" = 1'-0"

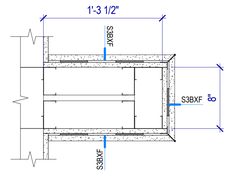

C5 PLAN DETAIL

SCALE: 1 1/2" = 1'-0"

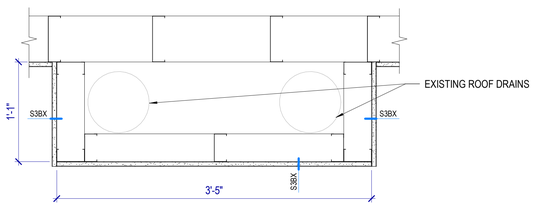

D1 PLAN DETAIL

SCALE: 1 1/2" = 1'-0"

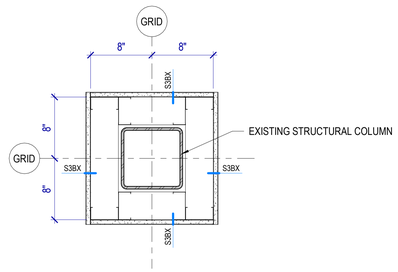

D3 PLAN DETAIL

SCALE: 1 1/2" = 1'-0"

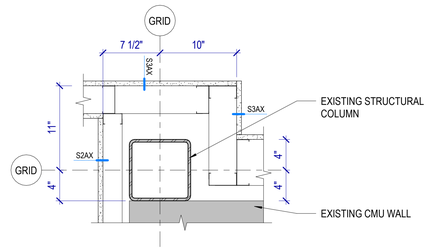

D4 PLAN DETAIL

SCALE: 1 1/2" = 1'-0"

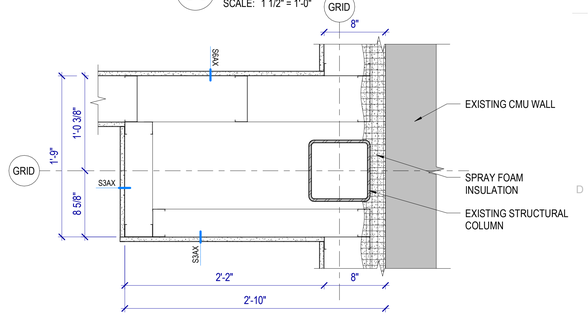

D5 PLAN DETAIL

SCALE: 1 1/2" = 1'-0"

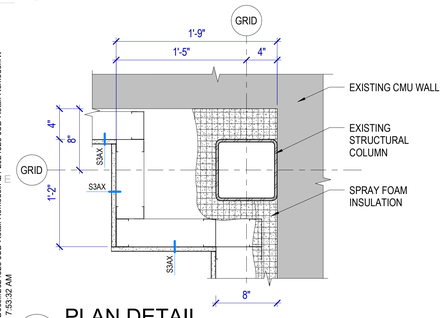

E1 PLAN DETAIL

SCALE: 1 1/2" = 1'-0"

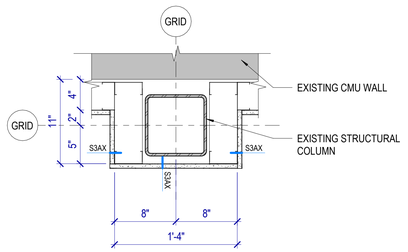

E2 PLAN DETAIL

SCALE: 1 1/2" = 1'-0"

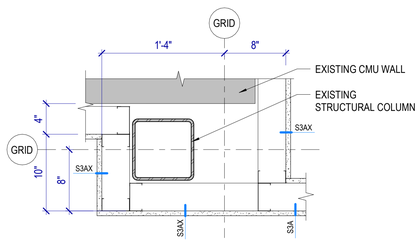

E3 PLAN DETAIL

SCALE: 1 1/2" = 1'-0"

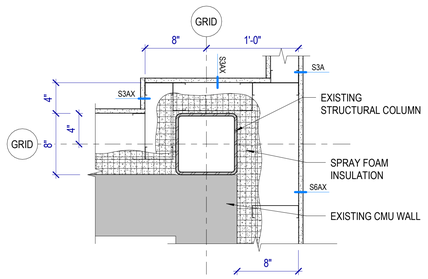

E4 PLAN DETAIL

SCALE: 1 1/2" = 1'-0"

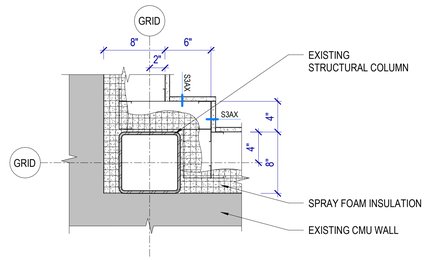

E5 PLAN DETAIL

SCALE: 1 1/2" = 1'-0"

MHTN ARCHITECTS
MHTN Architects, Inc.
280 South 400 West
Suite 250
Salt Lake City, Utah 84101
Telephone (801) 595-6700
www.mhtn.com

JORDAN SCHOOL DISTRICT

JORDAN LEARNING CENTER

3706 WEST 9800 SOUTH
SOUTH JORDAN, UT 84009

©2023 MHTN ARCHITECTS, INC.

Confidentiality Notice:
This document is intended for use on the Project identified herein by individuals and companies involved in the design, permitting, bidding and construction of the Project. MHTN Architects, Inc. grants limited rights to distribute and reproduce this document for this express purpose only. Distribution, printing or copying this document for purposes other than those indicated is strictly prohibited. If a digital copy of this document is received in error, please delete it.

SEAL

MHTN PROJECT NO. 2024528

Original drawing is 30 x 42. Do not scale contents of this drawing.

REVISIONS
CONTRACTOR TO VERIFY DRAWINGS IN FIELD USE REFLECT LAST REVISION DATE.

NO.	DATE	DESCRIPTION

ISSUE
CONSTRUCTION DOCUMENTS
AUGUST 29, 2024

SHEET NAME
PLAN DETAILS

SHEET NUMBER
A450

Autodesk Docs://2024528 JSD Retail Remodel/A24 2024528 JSD Retail Remodel.rvt
8/28/2024 7:53:32 AM

DOOR AND FRAME SCHEDULE

DOOR #	DOOR TYPE	DOOR WIDTH	DOOR HEIGHT	DOOR THICKNESS	DOOR MATERIAL	FRAME TYPE	FRAME MATERIAL	HEAD DETAIL	JAMB DETAIL	SILL DETAIL	FIRE RATING (MIN)	HARDWARE SET	REMARKS	DOOR #
A100	FG	3'-0"	7'-0"	2"	AL	SEE PLAN	AL	C4/A610	D4/A610	-		AL03	CR, DR, 8 MIL SECURITY FILM ON GLAZING	A100
A101	F	3'-0"	7'-0"	1 3/4"	WD	1	HM	C5/A610	D5/A610	E2/A610	-	08		A101
A103	F	3'-0"	7'-0"	1 3/4"	WD	1	HM	C5/A610	D5/A610	-	-	14		A103
A104	F	3'-0"	7'-0"	1 3/4"	WD	1	HM	C5/A610	D5/A610	-	-	15		A104
A106	G	3'-0"	7'-0"	1 3/4"	WD	8	HM	C5/A610	D5/A610	-	-	05		A106
A107	G	3'-0"	7'-0"	1 3/4"	WD	8	HM	C5/A610	D5/A610	-	-	05		A107
A108	FG	3'-0"	7'-0"	2"	AL	SEE PLAN	AL	C4/A610	D4/A610	-	-	AL04		A108
A109	N	3'-0"	7'-0"	1 3/4"	WD	1	HM	C5/A610	D5/A610	-	-	06		A109
A110-A	G	3'-0"	7'-0"	1 3/4"	WD	8	HM	C5/A610	D5/A610	-	-	20	8 MIL SECURITY FILM ON GLAZING	A110-A
A110-B	FG	3'-0"	7'-0"	1 3/4"	AL	SEE PLAN	AL	C1/A330	D1/A330 & E1/A332	C2/A610	-	AL02	CR, DC, 8 MIL SECURITY FILM ON GLAZING	A110-B
A111	G	3'-0"	7'-0"	1 3/4"	WD	8	HM	C5/A610	D5/A610	-	-	20	8 MIL SECURITY FILM ON GLAZING	A111
A112	G	3'-0"	7'-0"	1 3/4"	WD	8	HM	C5/A610	D5/A610	-	-	03	8 MIL SECURITY FILM ON GLAZING	A112
A113	F	3'-0"	7'-0"	1 3/4"	WD	1	HM	C5/A610	D5/A610	-	-	05		A113
A114-A	F	3'-0"	7'-0"	1 3/4"	WD	1	HM	C5/A610	D5/A610	-	-	05		A114-A
A114-B	F	3'-0"	7'-0"	1 3/4"	WD	1	HM	C5/A610	D5/A610	-	-	05		A114-B
A115	F	3'-0"	7'-0"	1 3/4"	WD	1	HM	C5/A610	D5/A610	-	-	05		A115
A116	F	3'-0"	7'-0"	1 3/4"	WD	1	HM	C5/A610	D5/A610	-	-	20		A116
A117	F	3'-0"	7'-0"	1 3/4"	WD	1	HM	C5/A610	D5/A610	-	-	02		A117
A118	F	3'-0"	7'-0"	1 3/4"	WD	1	HM	C5/A610	D5/A610	-	-	02		A118
A119	F	3'-0"	7'-0"	1 3/4"	WD	1	HM	C5/A610	D5/A610	-	-	02		A119
A120	F	3'-0"	7'-0"	1 3/4"	WD	1	HM	C5/A610	D5/A610	E2/A610	-	08		A120
A121-A	N	3'-0"	7'-0"	1 3/4"	WD	1	HM	C5/A610	D5/A610	-	-	06		A121-A
A121-B	N	3'-0"	7'-0"	1 3/4"	WD	1	HM	C5/A610	D5/A610	-	-	06		A121-B
A122	G	3'-0"	7'-0"	1 3/4"	WD	8	HM	C5/A610	D5/A610	-	-	03	8 MIL SECURITY FILM ON GLAZING	A122
A123	F	3'-0"	7'-0"	1 3/4"	WD	1	HM	C5/A610	D5/A610	-	-	02		A123
A124	F	3'-0"	7'-0"	1 3/4"	WD	1	HM	C5/A610	D5/A610	-	-	02		A124
A125	F	3'-0"	7'-0"	1 3/4"	WD	1	HM	C5/A610	D5/A610	-	-	02		A125
A126	F	3'-0"	7'-0"	1 3/4"	WD	1	HM	C5/A610	D5/A610	-	-	20		A126
A127	F	3'-0"	7'-0"	1 3/4"	WD	1	HM	C5/A610	D5/A610	-	-	02		A127
A128	F	3'-0"	7'-0"	1 3/4"	WD	1	HM	C5/A610	D5/A610	-	-	02		A128
A129	G	3'-0"	7'-0"	1 3/4"	WD	8	HM	C5/A610	D5/A610	-	-	05	8 MIL SECURITY FILM ON GLAZING	A129
A130	G	3'-0"	7'-0"	1 3/4"	WD	8	HM	C5/A610	D5/A610	-	-	01	8 MIL SECURITY FILM ON GLAZING	A130
A131	G	3'-0"	7'-0"	1 3/4"	WD	8	HM	C5/A610	D5/A610	-	-	03	8 MIL SECURITY FILM ON GLAZING	A131
A132-A	G	3'-0"	7'-0"	1 3/4"	WD	8	HM	C5/A610	D5/A610	-	-	10	CR, 8 MIL SECURITY FILM ON GLAZING	A132-A
A132-B	G	3'-0"	7'-0"	1 3/4"	WD	8	HM	C5/A610	D5/A610	-	-	10	CR, 8 MIL SECURITY FILM ON GLAZING	A132-B
A133	G	3'-0"	7'-0"	1 3/4"	WD	1	HM	C5/A610	D5/A610	-	-	01		A133
A134	F	3'-0"	7'-0"	1 3/4"	WD	1	HM	C5/A610	D5/A610	-	-	06		A134
A135	F	3'-0"	7'-0"	1 3/4"	WD	1	HM	C5/A610	D5/A610	-	-	06		A135
A136	F	3'-0"	7'-0"	1 3/4"	WD	1	HM	C5/A610	D5/A610	E2/A610	-	08		A136
A137-A	N	3'-0"	7'-0"	1 3/4"	WD	1	HM	C5/A610	D5/A610	-	-	06		A137-A
A137-B	N	3'-0"	7'-0"	1 3/4"	WD	1	HM	C5/A610	D5/A610	-	-	06		A137-B
A138	G	3'-0"	7'-0"	1 3/4"	WD	8	HM	C5/A610	D5/A610	-	-	03	8 MIL SECURITY FILM ON GLAZING	A138
A139	G	3'-0"	7'-0"	1 3/4"	WD	8	HM	C5/A610	D5/A610	-	-	11	CR, 8 MIL SECURITY FILM ON GLAZING	A139
A140-A	FG	3'-0"	7'-0"	1 3/4"	WD	8	HM	C5/A610	D5/A610		-	10	CR, DR, 21 MIL SECURITY FILM ON GLAZING	A140-A
A140-B	F	4'-0"	7'-0"	1 3/4"	HM	2	HM	C3/A610	D3/A610	C2/A610	-	13	INSULATED, PROVIDE CR, DC	A140-B
A141	G	3'-0"	7'-0"	1 3/4"	WD	8	HM	C5/A610	D5/A610	-	-	16		A141
A142	F	3'-0"	7'-0"	1 3/4"	WD	1	HM	C5/A610	D5/A610		-	18	ED	A142
A143	F	3'-0"	7'-0"	1 3/4"	WD	1	HM	C5/A610	D5/A610	-	-	05		A143
A144	F	4'-0"	7'-0"	1 3/4"	WD	1	HM	C5/A610	D5/A610	-	-	17		A144
A145	F	3'-0"	7'-0"	1 3/4"	WD	1	HM	C5/A610	D5/A610	E2/A610	-	08		A145
A146	F	3'-0"	7'-0"	1 3/4"	WD	1	HM	C5/A610	D5/A610		-	12	CR	A146
A147	F	3'-0"	7'-0"	1 3/4"	WD	1	HM	C5/A610	D5/A610	-	-	12	CR	A147
A148	F	2'-6"	7'-0"	1 3/4"	WD	1	HM	C5/A610	D5/A610	-	-	20		A148
A149	F	3'-0"	7'-0"	1 3/4"	WD	1	HM	C5/A610	D5/A610	E2/A610	-	09		A149
A150	F	3'-0"	7'-0"	1 3/4"	WD	1	HM	C5/A610	D5/A610	E2/A610	-	09		A150
A151	F	3'-0"	7'-0"	1 3/4"	WD	1	HM	C5/A610	D5/A610	-	-	06		A151
A152	F	3'-0"	7'-0"	1 3/4"	WD	1	HM	C5/A610	D5/A610	-	-	05		A152
A154	FG	3'-0"	7'-0"	2 1/4"	AL	SEE PLAN	AL	C4/A610	D4/A610	-	-	AL02	CR, DR, 8 MIL SECURITY FILM ON GLAZING	A154
A155	FG	3'-0"	7'-0"	2"	AL	SEE PLAN	AL	C4/A610	D4/A610	-	-	AL04		A155
A157	G	3'-0"	7'-0"	1 3/4"	WD	8	HM	C5/A610	D5/A610	-	-	04		A157
A161	FG	3'-0"	7'-0"	1 3/4"	AL	SEE PLAN	AL	C1/A330	D1/A330 & E2/A331	C2/A610	-		CR, DC, 8 MIL SECURITY FILM ON GLAZING	A161
B100-A	FG	6'-0"	7'-0"	2"	AL	SEE PLAN	AL	C1/A330	D1/A330 & D1/A332	E1/A330		AL07	CR, DC, ADA	B100-A
B100-B	FG	6'-0"	7'-0"	2"	AL	SEE PLAN	AL	C1/A330	D1/A330 & D1/A332	E1/A330		AL05	EL, DC	B100-B
B101	G	3'-0"	7'-0"	1 3/4"	WD	6	HM	C5/A610	D5/A610			05		B101

DOOR AND FRAME SCHEDULE

DOOR #	DOOR TYPE	DOOR WIDTH	DOOR HEIGHT	DOOR THICKNESS	DOOR MATERIAL	FRAME TYPE	FRAME MATERIAL	HEAD DETAIL	JAMB DETAIL	SILL DETAIL	FIRE RATING (MIN)	HARDWARE SET	REMARKS	DOOR #
B103-A	FG	3'-0"	7'-0"	2 1/4"	AL	SEE PLAN	AL	C4/A610	D4/A610	-		AL03	CR, DR, 21 MIL MIN SECURITY FILM ON GLAZING	B103-A
B103-B	FG	3'-0"	7'-0"	1 3/4"	WD	8	HM	C5/A610	D5/A610	-		04		B103-B
B103-C	F	3'-0"	7'-0"	1 3/4"	WD	1	HM	C5/A610	D5/A610	-		04		B103-C
B105	FG	3'-0"	7'-0"	1 3/4"	WD	8	HM	C5/A610	D5/A610	-		04		B105
B106	G	3'-0"	7'-0"	1 3/4"	WD	6	HM	C5/A610	D5/A610	-		05		B106
B109	G	3'-0"	7'-0"	1 3/4"	WD	6	HM	C5/A610	D5/A610	-		05		B109
B110	F	3'-0"	7'-0"	1 3/4"	WD	1	HM	C5/A610	D5/A610	-		22		B110
B111	G	3'-0"	7'-0"	1 3/4"	WD	6	HM	C5/A610	D5/A610	-		05		B111
B112	G	3'-0"	7'-0"	1 3/4"	WD	6	HM	C5/A610	D5/A610	-		05		B112
B113	G	3'-0"	7'-0"	1 3/4"	WD	6	HM	C5/A610	D5/A610	-		05		B113
B114	G	3'-0"	7'-0"	1 3/4"	WD	6	HM	C5/A610	D5/A610	-		05		B114
B115	F	3'-0"	7'-0"	1 3/4"	WD	1	HM	C5/A610	D5/A610	-		22		B115
B116	N	3'-0"	7'-0"	1 3/4"	WD	1	HM	C5/A610	D5/A610	-		06		B116
B117	G	3'-0"	7'-0"	1 3/4"	WD	6	HM	C5/A610	D5/A610	-		05		B117
B118	FG	3'-0"	7'-0"	2"	AL	SEE PLAN	AL	C4/A610	D4/A610	-		AL04		B118
B119-A	FG	6'-0"	7'-0"	1 3/4"	AL	SEE PLAN	AL	C4/A610	D4/A610	-		AL06	CR, DR, 21 MIL SECURITY FILM ON GLAZING	B119-A
B119-B	FG	6'-0"	7'-1"	1 3/4"	AL	SEE PLAN	AL	C4/A610	D4/A610	-			CR	B119-B
B119-C	FG	6'-0"	7'-1"	1 3/4"	AL	SEE PLAN	AL	C4/A610	D4/A610	-			CR	B119-C
B119-D	OGP							B5/A611 SIM		B4/A611 SIM			OPERABLE GLASS-PANEL PARTITION, CYLINDER BY HARDWARE SUPPLIER, 21 MIL SECURITY FILM ON GLAZING	B119-D
B119-E	FG	6'-0"	7'-1"	1 3/4"	AL	SEE PLAN	AL	C4/A610	D4/A610	-			CR	B119-E
B119-F	OP	18'-8"	9'-4"	2 3/8"		SEE PLAN		E3/A630	E4/A630 & D2/A610	E2/A630		OH01	OPERABLE FOLDING PARTITION, 21 MIL SECURITY FILM ON GLAZING	B119-F
B119-G	OP							A4/A611	SEE PLAN	B4/A611			OPERRABLE FOLDING PARTITION, MO	B119-G
B119-H	OP							A4/A611	SEE PLAN	B4/A611			OPERABLE FOLDING PARTITION, MO	B119-H
B119-J	RAC					-				B4/A611 SIM			VERTICAL FOLDING RETRACTABLE WALL, MO	B119-J
B119-K	RAC					-				B4/A611 SIM			VERTICAL FOLDING RETRACTABLE WALL, MO	B119-K
B120	F	6'-0"	7'-0"	1 3/4"	WD	3	HM	C5/A610	D5/A610	-		23		B120
B121	F	6'-0"	7'-0"	1 3/4"	WD	3	HM	C5/A610	D5/A610	-		23		B121
B122	FG	3'-0"	7'-0"	2"	WD	7	HM	C5/A610	D5/A610	-		24	PROVIDE ELECTIFIED HARDWARE, 21 MIL SECURITY FILM ON GLAZING	B122
B123-A	FG	3'-0"	7'-0"	1 3/4"	WD	8	HM	C5/A610	D5/A610	-		07	8 MIL SECURITY FILM ON GLAZING	B123-A
B123-B	FG	3'-0"	7'-0"	1 3/4"	WD	8	HM	C5/A610	D5/A610	-		03	8 MIL SECURITY FILM ON GLAZING	B123-B
B123-C	OP							B5/A611 SIM	SEE PLAN	B4/A611			OPERABLE FOLDING PARTITION	B123-C
B124	N	3'-0"	7'-0"	1 3/4"	WD	1	HM	C5/A610	D5/A610	-		06		B124
B125-A	FG	3'-0"	7'-0"	1 3/4"	WD	8	HM	C5/A610	D5/A610	-		03	8 MIL SECURITY FILM ON GLAZING	B125-A
B125-B	SL	7'-10"	9'-2"	1 3/4"					D4/A610			27	STOREFRONT SLIDING MALL FRONT SYSTEM, 8 MIL SECURITY FILM ON GLAZING	B125-B
B126-A	FG	3'-0"	7'-0"	1 3/4"	WD	8	HM	C5/A610	D5/A610	-		03	8 MIL SECURITY FILM ON GLAZING	B126-A
B126-B	SL	7'-10"	9'-2"	1 3/4"					D4/A610			27	STOREFRONT SLIDING MALL FRONT SYSTEM, 8 MIL SECURITY FILM ON GLAZING	B126-B
B127	FG	3'-0"	7'-0"	1 3/4"	WD	8	HM	C5/A610	D5/A610	-		03	8 MIL SECURITY FILM ON GLAZING	B127
B128-A	FG	3'-0"	7'-0"	1 3/4"	WD	8	HM	C5/A610	D5/A610	-		10	CR, 8 MIL SECURITY FILM ON GLAZING	B128-A
B128-B	FG	3'-0"	7'-0"	1 3/4"	WD	8	HM	C5/A610	D5/A610	-		10	CR	B128-B
B129-A	G	3'-0"	7'-0"	1 3/4"	WD	5	HM	C5/A610	D5/A610	-		21		B129-A
B129-B	N	3'-0"	7'-0"	1 3/4"	WD	1	HM	C5/A610	D5/A610	-		06		B129-B
B130	F	3'-0"	7'-0"	1 3/4"	WD	1	HM	C5/A610	D5/A610	-		06		B130
B131	F	3'-0"	7'-0"	1 3/4"	WD	1	HM	C5/A610	D5/A610	E2/A610		08		B131
B132	F	3'-0"	7'-0"	1 3/4"	WD	1	HM	C5/A610	D5/A610	E2/A610		08		B132
B133	F	3'-0"	7'-0"	1 3/4"	WD	1	HM	C5/A610	D5/A610	-		06		B133
B134	F	3'-0"	7'-0"	1 3/4"	WD	1	HM	C5/A610	D5/A610	-		12	CR	B134
B135-A	F	3'-0"	7'-0"	1 3/4"	HM	1	HM	C3/A610	D3/A610	C2/A610		13	INSULATED, PROVIDE CR, DC	B135-A
B135-B	OH	8'-0"	8'-0"	3"								OH01	EXISTING OH DOOR - PROVIDE DC	B135-B
B135-C	OH	8'-0"	8'-0"	3"								OH01	EXISTING OH DOOR - PROVIDE DC	B135-C
B135-D	OH	10'-0"	10'-0"	3"	STEEL		STEEL	D1/A331	E1/A331			OH01	INSULATED OH DOOR - PROVIDE MO, DC	B135-D
B135-E	F	6'-0"	7'-0"	1 3/4"	WD	3	HM	C5/A610	D5/A610	-		26	CR	B135-E
B136	F	3'-0"	7'-0"	1 3/4"	WD	1	HM	C5/A610	D5/A610	-		01		B136
B137	FG	3'-0"	7'-0"	1 3/4"	AL	SEE PLAN	AL	C1/A330	D1/A330 & E2/A331	C2/A610		13	INSULATED, PROVIDE CR, D, 21 MIL SECURITY FILM ON GLAZING	B137
Grand total: 117														

DOOR SCHEDULE GENERAL NOTES

RE: A620 for the Glazing Schedule.

RE: Division 8 Section "Door Hardware" for hardware sets.

Door Leaves: At each door, provide the number of leaves shown on the plans. Where two leaves are shown, provide equal leaves, UNO.

Frame Depth: Coordinate hollow metal frame depth with wall thickness, wrapping stud framed walls. Provide depths as scheduled for masonry walls, UNO.

Abbreviations: Door and Frame Schedule Remarks abbreviations:

ADA	ADA Actuator
DC	Door Contact
CR	Card Reader
DR	Door Release
EL	Electric Latch
ES	Electric Strike
MO	Motor Operation
ED	Exit Device
OP	Operable Partition
OGP	Operable Glass Partition
OH	Overhead
RAC	Retractable Acoustical Wall

HOLLOW METAL FRAME DEPTH SCHEDULE

MASONRY/CONCRETE DEPTH	FRAME DEPTH
6"	5 3/4"
8"	6 3/4"
10"	8 3/4"
12"	10 3/4"

GLAZING SCHEDULE

1	CLEAR SILICONE SEALANT, CONTINUOUS
A01	6mm (1/4") CLEAR ANNEALED FLOAT GLASS
H22	1" LOW-E COATED, CLEAR HEAT-STRENGTHENED INSULATING GLASS
T01	6mm (1/4") CLEAR TEMPERED FLOAT GLASS
T02	12mm (1/2") CLEAR TEMPERED FLOAT GLASS
T22	1" LOW-E COATED, CLEAR TEMPERED INSULATING GLASS
T24	1" LOW-E COATED, INSULATING SPANDREL GLASS

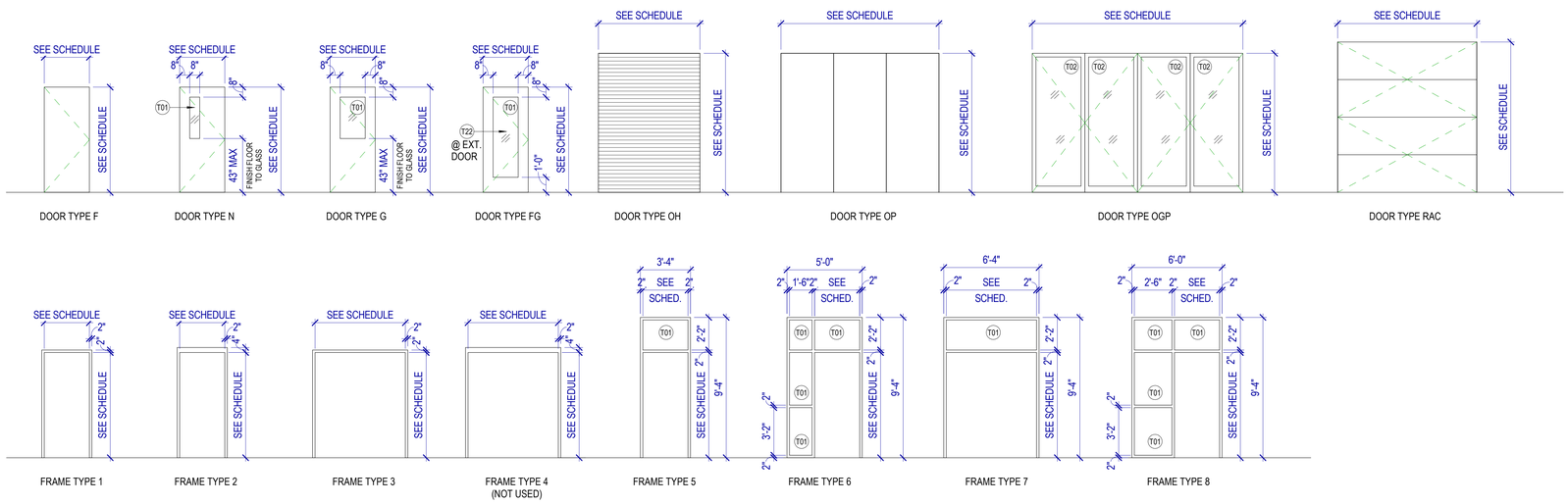

DOOR & FRAME TYPES

MHTN ARCHITECTS

MHTN Architects, Inc.
280 South 400 West
Suite 250
Salt Lake City, Utah 84101
Telephone (801) 595-6700
www.mhtn.com

JORDAN SCHOOL DISTRICT

JORDAN LEARNING CENTER

3706 WEST 9800 SOUTH
SOUTH JORDAN, UT 84009

©2023 MHTN ARCHITECTS, INC.

Confidentiality Notice:
This document is intended for use on the Project identified herein by individuals and companies involved in the design, permitting, bidding and construction of the Project. MHTN Architects, Inc. grants limited rights to distribute and reproduce this document for this express purpose only. Distribution, printing or copying this document for purposes other than those indicated is strictly prohibited. If a digital copy of this document is received in error, please delete it.

SEAL

STATE OF UTAH
CLIFFORD HOWARD CURTIS
No. 7394786-0301
2/8 AUGUST 2024
ARCHITECT

MHTN PROJECT NO. 2024528

Original drawing is 30 x 42. Do not scale contents of this drawing.

REVISIONS
CONTRACTOR TO VERIFY DRAWINGS IN FIELD USE REFLECT LAST REVISION DATE.

NO.	DATE	DESCRIPTION

ISSUE
CONSTRUCTION DOCUMENTS
AUGUST 29, 2024

SHEET NAME
DOOR SCHEDULE

SHEET NUMBER
A600

Autodesk Docs://2024528 JSD Retail Remodel/A24 2024528 JSD Retail Remodel.rvt
8/28/2024 7:53:35 AM

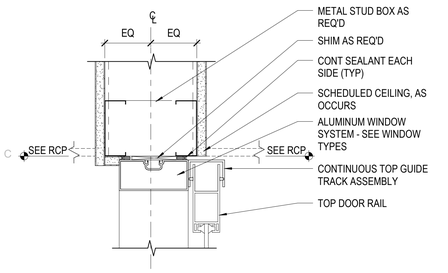

C1 DOOR HEAD DETAIL

SCALE: 3" = 1'-0"

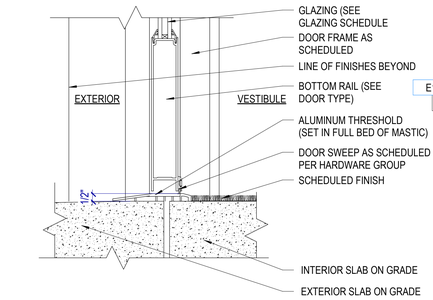

C2 THRESHOLD DETAIL

SCALE: 3" = 1'-0"

(HOLLOW METAL DOOR SIMILAR)

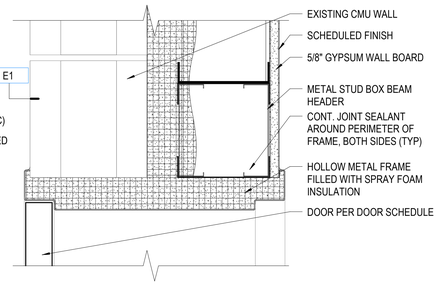

C3 HEAD DETAIL

SCALE: 3" = 1'-0"

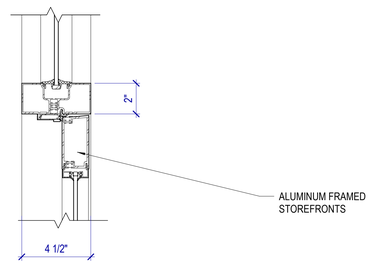

C4 HEAD DETAIL

SCALE: 3" = 1'-0"

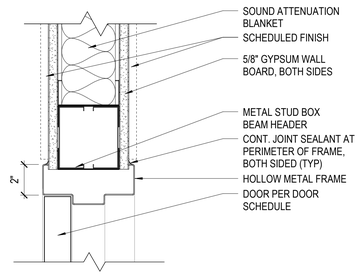

C5 HEAD DETAIL

SCALE: 3" = 1'-0"

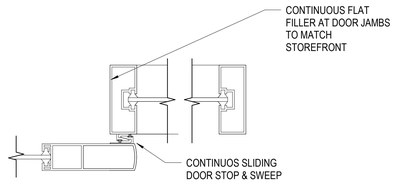

D1 DOOR JAMB DETAIL

SCALE: 3" = 1'-0"

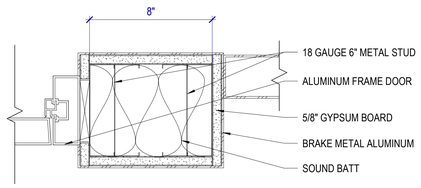

D2 JAMB DETAIL

SCALE: 3" = 1'-0"

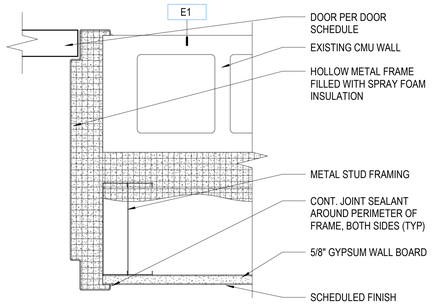

D3 JAMB DETAIL

SCALE: 3" = 1'-0"

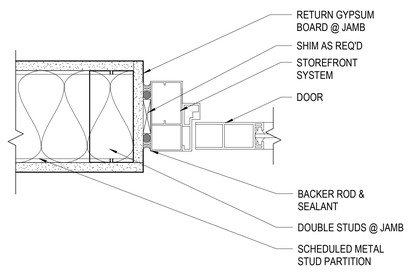

D4 JAMB DETAIL

SCALE: 3" = 1'-0"

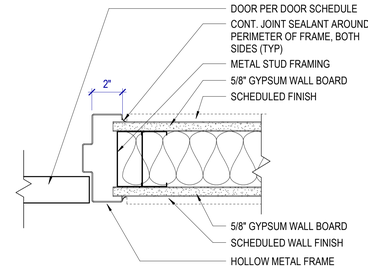

D5 JAMB DETAIL

SCALE: 3" = 1'-0"

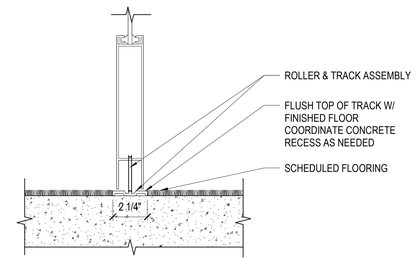

E1 THRESHOLD DETAIL

SCALE: 3" = 1'-0"

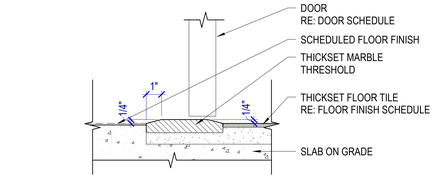

E2 THRESHOLD DETAIL

SCALE: 3" = 1'-0"

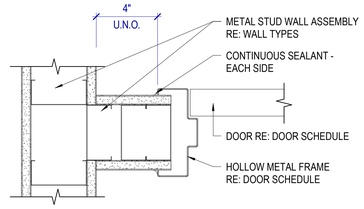

E3 TYPICAL MS DOOR JAMB DETAIL

SCALE: 3" = 1'-0"

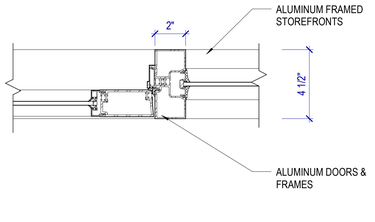

E4 JAMB DETAIL

SCALE: 3" = 1'-0"

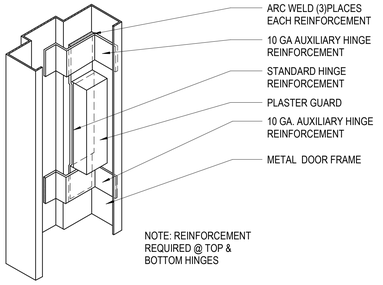

E5 REINFORCED DOOR FRAME

SCALE: 1 1/2" = 1'-0"

MHTN ARCHITECTS
MHTN Architects, Inc.
280 South 400 West
Suite 250
Salt Lake City, Utah 84101
Telephone (801) 595-6700
www.mhtn.com

JORDAN SCHOOL DISTRICT

JORDAN LEARNING CENTER

3706 WEST 9800 SOUTH
SOUTH JORDAN, UT 84009

©2023 MHTN ARCHITECTS, INC.
Confidentiality Notice:
This document is intended for use on the Project identified herein by individuals and companies involved in the design, permitting, bidding and construction of the Project. MHTN Architects, Inc. grants limited rights to distribute and reproduce this document for this express purpose only. Distribution, printing or copying this document for purposes other than those indicated is strictly prohibited. If a digital copy of this document is received in error, please delete it.

SEAL

MHTN PROJECT NO. 2024528

Original drawing is 30 x 42. Do not scale contents of this drawing.

REVISIONS
CONTRACTOR TO VERIFY DRAWINGS IN FIELD USE REFLECT LAST REVISION DATE.

NO.	DATE	DESCRIPTION

ISSUE
CONSTRUCTION DOCUMENTS
AUGUST 29, 2024

SHEET NAME
DOOR DETAILS

SHEET NUMBER
A610

Autodesk Docs://2024528 JSD Retail Remodel/A24 2024528 JSD Retail Remodel.rvt
8/28/2024 7:53:36 AM

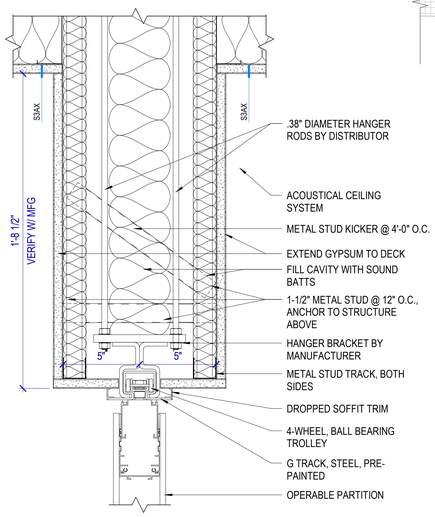

B1 HEAD DETAIL

SCALE: 3" = 1'-0"

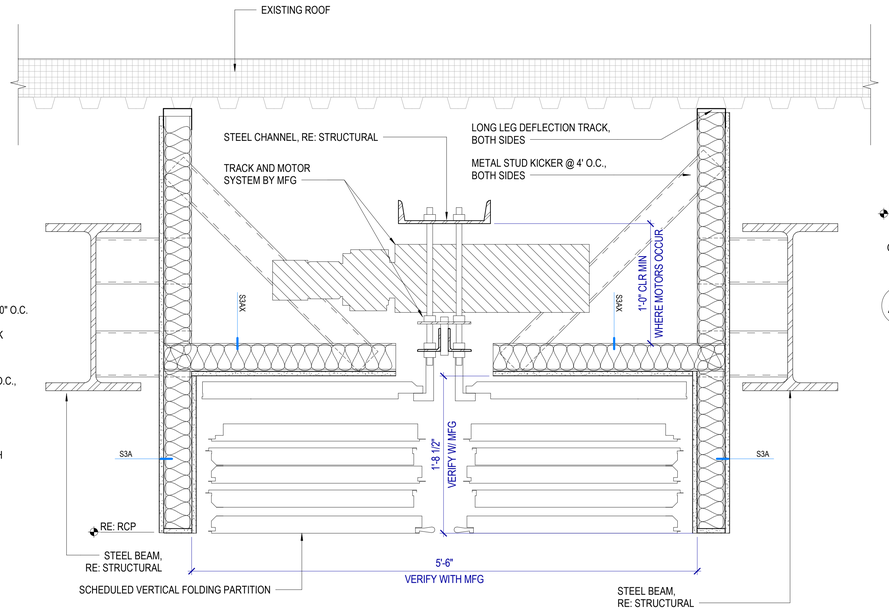

B2 VERTICAL FOLDING PARTITION HEAD

SCALE: 1 1/2" = 1'-0"

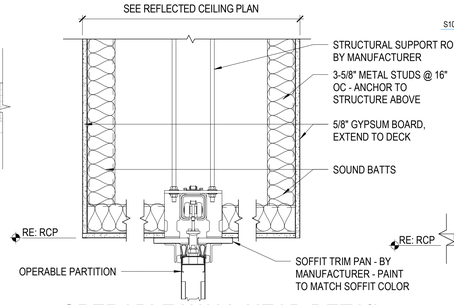

A4 OPERABLE WALL HEAD DETAIL

SCALE: 1 1/2" = 1'-0"

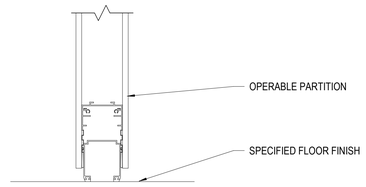

B4 SILL DETAIL

SCALE: 3" = 1'-0"

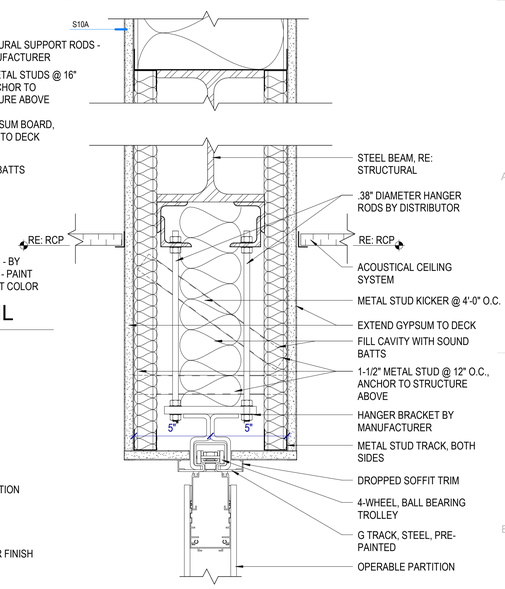

B5 HEAD DETAIL

SCALE: 3" = 1'-0"

C5 PARTITION INTERSECTION

SCALE: 1 1/2" = 1'-0"

MHTN ARCHITECTS
MHTN Architects, Inc.
280 South 400 West
Suite 250
Salt Lake City, Utah 84101
Telephone (801) 595-6700
www.mhtn.com

JORDAN SCHOOL DISTRICT

JORDAN LEARNING CENTER

3706 WEST 9800 SOUTH
SOUTH JORDAN, UT 84009

©2023 MHTN ARCHITECTS, INC.

Confidentiality Notice
This document is intended for use on the Project identified herein by individuals and companies involved in the design, permitting, bidding and construction of the Project. MHTN Architects, Inc. grants limited rights to distribute and reproduce this document for this express purpose only. Distribution, printing or copying this document for purposes other than those indicated is strictly prohibited. If a digital copy of this document is received in error, please delete it.

SEAL

MHTN PROJECT NO. 2024528

Original drawing is 30 x 42. Do not scale contents of this drawing.

REVISIONS
CONTRACTOR TO VERIFY DRAWINGS IN FIELD USE REFLECT LAST REVISION DATE.

NO.	DATE	DESCRIPTION

ISSUE
CONSTRUCTION DOCUMENTS
AUGUST 29, 2024

SHEET NAME
DOOR DETAILS

SHEET NUMBER
A611

Autodesk Docs://2024528 JSD Retail Remodel/A24 2024528 JSD Retail Remodel.rvt
8/28/2024 7:53:37 AM

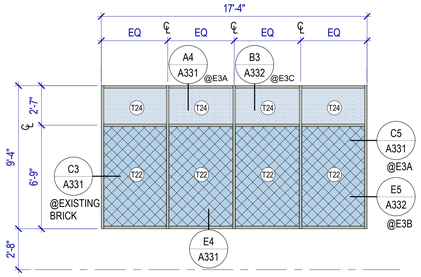

WINDOW TYPE 1

SCALE: 1/4" = 1'-0" STOREFRONT

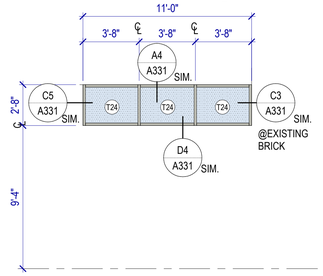

WINDOW TYPE 2

SCALE: 1/4" = 1'-0" STOREFRONT

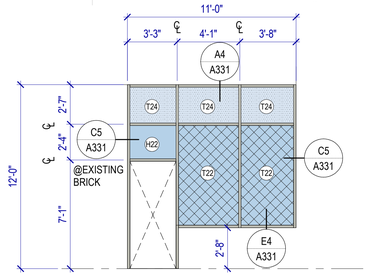

WINDOW TYPE 3

SCALE: 1/4" = 1'-0" STOREFRONT

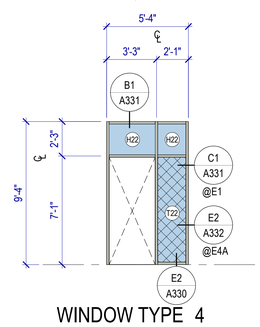

WINDOW TYPE 4

SCALE: 1/4" = 1'-0" STOREFRONT

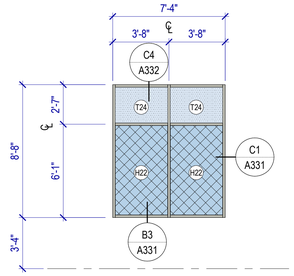

WINDOW TYPE 5

SCALE: 1/4" = 1'-0" STOREFRONT

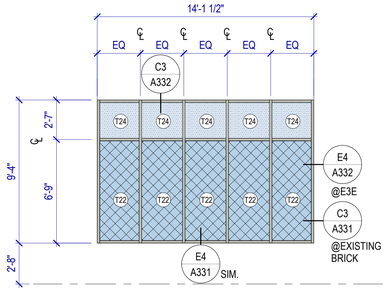

WINDOW TYPE 6

SCALE: 1/4" = 1'-0" STOREFRONT

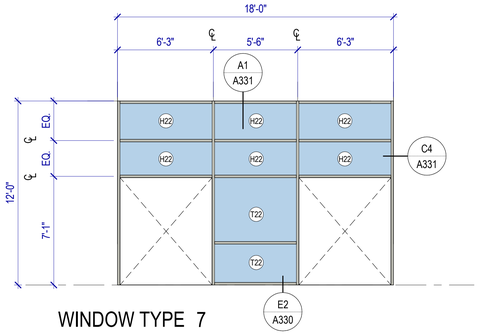

WINDOW TYPE 7

SCALE: 1/4" = 1'-0" STOREFRONT

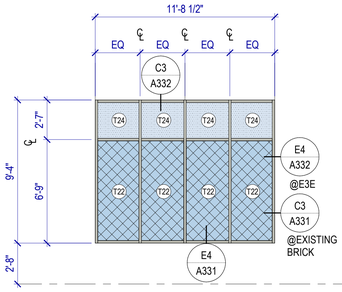

WINDOW TYPE 8

SCALE: 1/4" = 1'-0" STOREFRONT

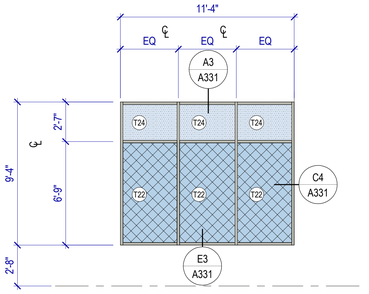

WINDOW TYPE 9

SCALE: 1/4" = 1'-0" STOREFRONT

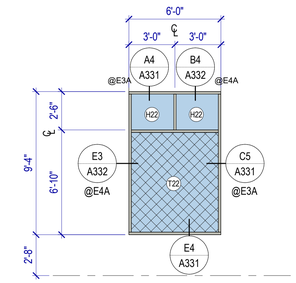

WINDOW TYPE 10

SCALE: 1/4" = 1'-0" STOREFRONT

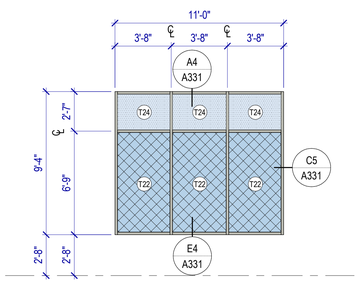

WINDOW TYPE 11

SCALE: 1/4" = 1'-0" STOREFRONT

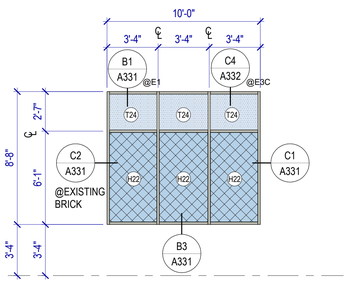

WINDOW TYPE 12

SCALE: 1/4" = 1'-0" STOREFRONT

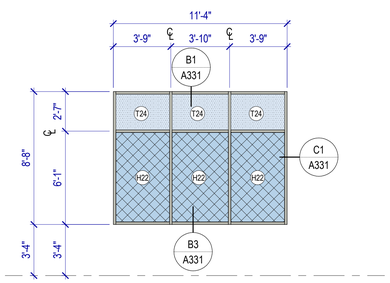

WINDOW TYPE 13

SCALE: 1/4" = 1'-0" STOREFRONT

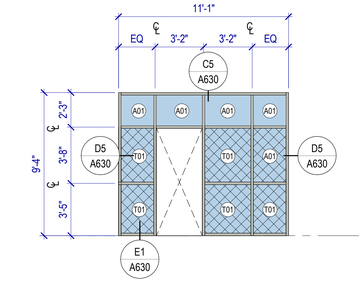

WINDOW TYPE IN1

SCALE: 1/4" = 1'-0" STOREFRONT

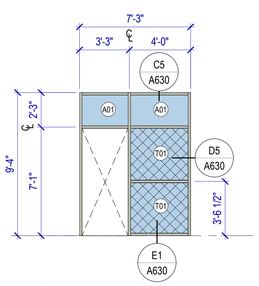

WINDOW TYPE IN2

SCALE: 1/4" = 1'-0" STOREFRONT

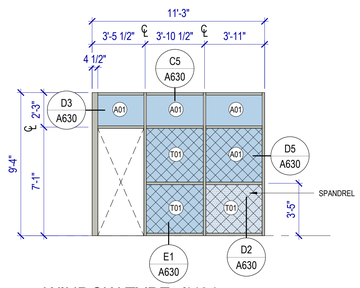

WINDOW TYPE IN3A

SCALE: 1/4" = 1'-0" STOREFRONT

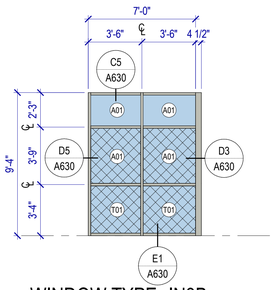

WINDOW TYPE IN3B

SCALE: 1/4" = 1'-0" STOREFRONT

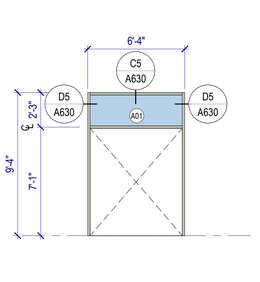

WINDOW TYPE IN4

SCALE: 1/4" = 1'-0" STOREFRONT

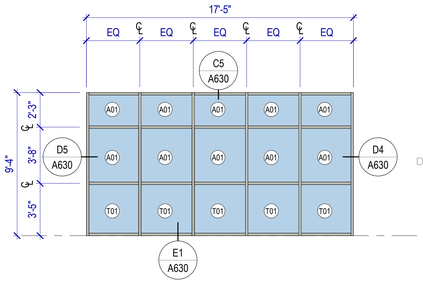

WINDOW TYPE IN5

SCALE: 1/4" = 1'-0" STOREFRONT

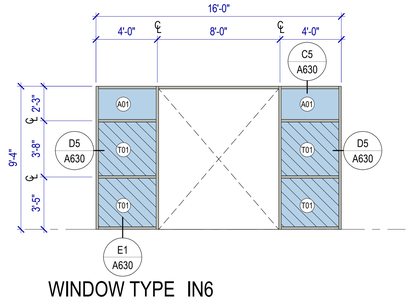

WINDOW TYPE IN6

SCALE: 1/4" = 1'-0" STOREFRONT

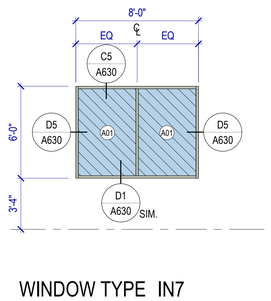

WINDOW TYPE IN7

SCALE: 1/4" = 1'-0" STOREFRONT

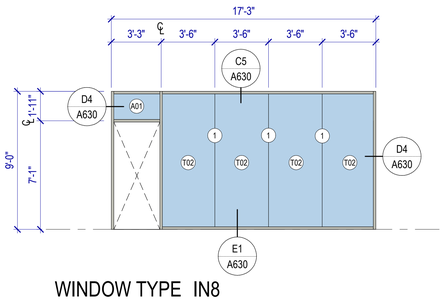

WINDOW TYPE IN8

SCALE: 1/4" = 1'-0" STOREFRONT

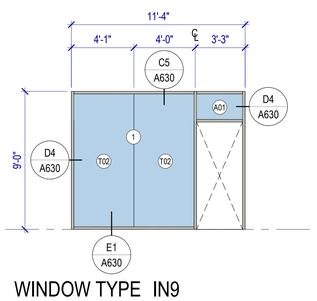

WINDOW TYPE IN9

SCALE: 1/4" = 1'-0" STOREFRONT

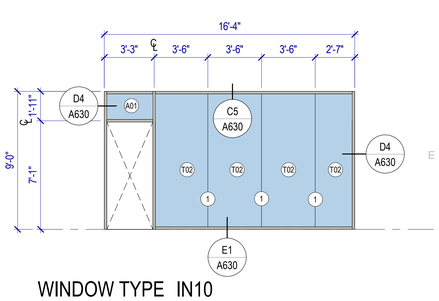

WINDOW TYPE IN10

SCALE: 1/4" = 1'-0" STOREFRONT

WINDOW TYPES GENERAL NOTES

Window Frames: Frames are aluminum storefront, UNO. Finish as specified.

End Dams: Provide end dams at sill flashing.

Coordination: Coordinate all trades to provide complete systems, including, but not limited to framing, glazing, sealants, flashing, brake metal and backing.

GLAZING SCHEDULE

1	CLEAR SILICONE SEALANT, CONTINUOUS
A01	6mm (1/4") CLEAR ANNEALED FLOAT GLASS
H22	1" LOW-E COATED, CLEAR HEAT-STRENGTHENED INSULATING GLASS
T01	6mm (1/4") CLEAR TEMPERED FLOAT GLASS
T02	12mm (1/2") CLEAR TEMPERED FLOAT GLASS
T22	1" LOW-E COATED, CLEAR TEMPERED INSULATING GLASS
T24	1" LOW-E COATED, INSULATING SPANDREL GLASS

GLAZING LEGEND

21 MIL SECURITY FILM

8 MIL SECURITY FILM

MHTN ARCHITECTS

MHTN Architects, Inc.
280 South 400 West
Suite 250
Salt Lake City, Utah 84101
Telephone (801) 595-6700
www.mhtn.com

JORDAN SCHOOL DISTRICT

JORDAN LEARNING CENTER

3706 WEST 9800 SOUTH
SOUTH JORDAN, UT 84009

©2023 MHTN ARCHITECTS, INC.

Confidentiality Notice:
This document is intended for use on the Project identified herein by individuals and companies involved in the design, permitting, bidding and construction of the Project. MHTN Architects, Inc. grants limited rights to distribute and reproduce this document for this express purpose only. Distribution, printing or copying this document for purposes other than those indicated is strictly prohibited. If a digital copy of this document is received in error, please delete it.

SEAL

MHTN PROJECT NO. 2024528

Original drawing is 30 x 42. Do not scale contents of this drawing.

REVISIONS
CONTRACTOR TO VERIFY DRAWINGS IN FIELD USE REFLECT LAST REVISION DATE.

NO.	DATE	DESCRIPTION

ISSUE
CONSTRUCTION DOCUMENTS
AUGUST 29, 2024

SHEET NAME
WINDOW TYPES

SHEET NUMBER
A620

Autodesk Docs://2024528 JSD Retail Remodel/A24 2024528 JSD Retail Remodel.rvt
8/28/2024 7:53:43 AM

D1 INTERIOR WINDOW SILL DETAIL

SCALE: 3" = 1'-0"

D2 CASEWORK SPANDREL

SCALE: 3" = 1'-0"

D3 JAMB DETAIL

SCALE: 3" = 1'-0"

D4 JAMB DETAIL

SCALE: 3" = 1'-0"

D5 JAMB DETAIL

SCALE: 3" = 1'-0"

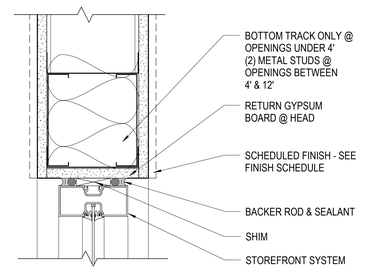

C5 HEAD DETAIL

SCALE: 3" = 1'-0"

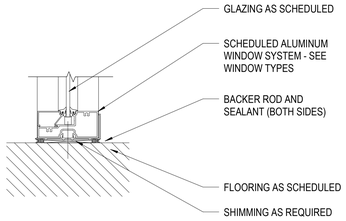

E1 INTERIOR WINDOW SILL DETAIL

SCALE: 3" = 1'-0"

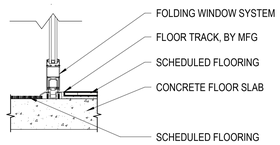

E2 SILL DETAIL

SCALE: 1 1/2" = 1'-0"

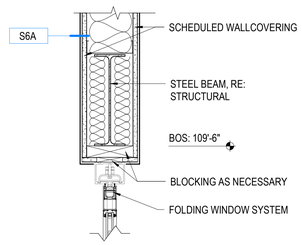

E3 JAMB DETAIL

SCALE: 1 1/2" = 1'-0"

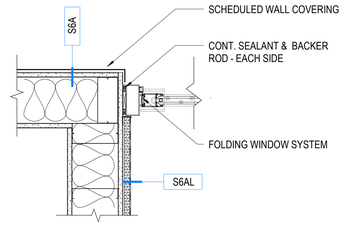

E4 JAMB DETAIL

SCALE: 1 1/2" = 1'-0"

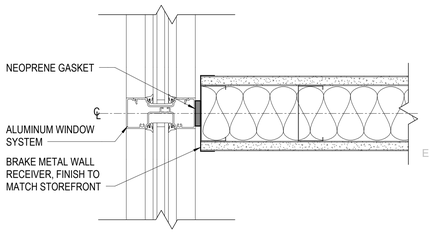

NOTE: CENTER WALL ON MULLION

A5 WALL CENTERED ON MULLION

SCALE: 3" = 1'-0"

MHTN ARCHITECTS
MHTN Architects, Inc.
280 South 400 West
Suite 250
Salt Lake City, Utah 84101
Telephone (801) 595-6700
www.mhtn.com

JORDAN SCHOOL DISTRICT

JORDAN LEARNING CENTER

3706 WEST 9800 SOUTH
SOUTH JORDAN, UT 84009

©2023 MHTN ARCHITECTS, INC.
Confidentiality Notice:
This document is intended for use on the Project identified herein by individuals and companies involved in the design, permitting, bidding and construction of the Project. MHTN Architects, Inc. grants limited rights to distribute and reproduce this document for the purposes described above. Any distribution and/or reproduction of this document for purposes other than those indicated is strictly prohibited. If a digital copy of this document is received in error, please delete it.

SEAL

STATE OF UTAH
CLIFFORD HOWARD CURTIS
No. 7394766-0301
24 AUGUST 2024
LICENSED ARCHITECT

MHTN PROJECT NO. 2024528

Original drawing is 30 x 42. Do not scale contents of this drawing.

REVISIONS
CONTRACTOR TO VERIFY DRAWINGS IN FIELD USE REFLECT LAST REVISION DATE.

NO.	DATE	DESCRIPTION

ISSUE
CONSTRUCTION DOCUMENTS
AUGUST 29, 2024

SHEET NAME
WINDOW DETAILS

SHEET NUMBER
A630

Autodesk Docs://2024528 JSD Retail Remodel/A24 2024528 JSD Retail Remodel.rvt
8/29/2024 7:53:45 AM

FINISH SCHEDULE AREA A

RM #	ROOM NAME	FLOOR FINISH	BASE FINISH	WALL				CEILING FINISH	CABINET FINISH	COUNTER TOP FINISH	REMARKS	RM #
				NORTH WALL FINISH	EAST WALL FINISH	SOUTH WALL FINISH	WEST WALL FINISH					
A100	WAITING	SEE PLAN	RB1	WC4	PT1	PT1	PT4, PL1	SEE RCP				A100
A101	W/C	SEE PLAN	TB2	WT2	WT2	WT2	WT4	SEE RCP				A101
A102	OFFICE	SEE PLAN	RB1	PT1	PT1, PT4	PT1	PT1	SEE RCP	PL1	PL4		A102
A103	RECEPTION	SEE PLAN	RB1		PT4		PT4	SEE RCP	PL1	SS1		A103
A104	RECORDS	SEE PLAN	RB1	PT1	PT1	PT1	PT1	SEE RCP	PL1			A104
A105	CORRIDOR	SEE PLAN	RB1	PT1, PT6	PT1, PT6, WD, WC4	PT1, PT6	PT1, PT6, WD, WC4	SEE RCP				A105
A106	ADMIN OFFICE	SEE PLAN	RB1	PT1	PT1	PT1	PT1	SEE RCP				A106
A107	ADMIN OFFICE	SEE PLAN	RB1	PT1	PT1	PT1	PT1	SEE RCP				A107
A108	CONFERENCE	SEE PLAN	RB1	PT1	PT1	PT1	PT1	SEE RCP				A108
A109	STORAGE	SEE PLAN	RB1	PT1	PT1	PT1	PT1	SEE RCP				A109
A110	MOTOR ROOM	SEE PLAN	RB1	PT1	PT1	PT1	PT1	SEE RCP				A110
A111	SENSORY/BALL ROOM	SEE PLAN	RB1	PT1	PT1	PT1	PT1	SEE RCP				A111
A112	COMMUNICATION	SEE PLAN	RB1	PT1, TCK1	PT1	PT1	PT1	SEE RCP	PL1	PL4		A112
A113	NURSE	SEE PLAN	RB1	PT1	PT1	PT1	PT1	SEE RCP				A113
A114	SANITARY	SEE PLAN	RB1	PT1	PT1	PT1	PT1	SEE RCP	PL1	PL4		A114
A115	NURSE	SEE PLAN	RB1	PT1	PT1	PT1	PT1	SEE RCP				A115
A116	STORAGE	SEE PLAN	RB1	PT1	PT1	PT1	PT1	SEE RCP				A116
A117	TESTING	SEE PLAN	RB1	PT1	WC4	PT1	PT1	SEE RCP				A117
A118	TESTING	SEE PLAN	RB1	PT1	WC4	PT1	PT1	SEE RCP				A118
A119	TESTING	SEE PLAN	RB1	PT1	WC4	PT1	PT1	SEE RCP				A119
A120	W/C	SEE PLAN	TB2	WT4	WT2	WT2	WT2	SEE RCP				A120
A121	STORAGE	SEE PLAN	RB1	PT1	PT1	PT1	PT1	SEE RCP				A121
A122	TODDLER	SEE PLAN	RB1	PT1	PT1	PT1, TCK1	PT1	SEE RCP	PL1	PL4		A122
A123	TESTING	SEE PLAN	RB1	PT1	WC4	PT1	PT1	SEE RCP				A123
A124	TESTING	SEE PLAN	RB1	PT1	WC4	PT1	PT1	SEE RCP				A124
A125	TESTING	SEE PLAN	RB1	PT1	WC4	PT1	PT1	SEE RCP				A125
A126	STORAGE	SEE PLAN	RB1	PT1	PT1	PT1	PT1	SEE RCP				A126
A127	TESTING	SEE PLAN	RB1	PT1	WC4	PT1	PT1	SEE RCP				A127
A128	TESTING	SEE PLAN	RB1	PT1	WC4	PT1	PT1	SEE RCP				A128
A129	OFFICE	SEE PLAN	RB1	PT1	PT1	PT1	PT1	SEE RCP				A129
A130	AUDIOLOGY	SEE PLAN	RB1	PT1	PT1	PT1	PT1	SEE RCP	PL1	PL4		A130

FINISH SCHEDULE AREA A

RM #	ROOM NAME	FLOOR FINISH	BASE FINISH	WALL				CEILING FINISH	CABINET FINISH	COUNTER TOP FINISH	REMARKS	RM #
				NORTH WALL FINISH	EAST WALL FINISH	SOUTH WALL FINISH	WEST WALL FINISH					
A131	TODDLER	SEE PLAN	RB1	PT1, TCK1	PT1	PT1	PT1	SEE RCP	PL1	PL4		A131
A132	TEACHER TEAM	SEE PLAN	RB1	PT1	PT1	PT1	PT1	SEE RCP				A132
A133	WORK ROOM	SEE PLAN	RB1	PT1	PT1	PT1	PT1	SEE RCP	PL1	PL4		A133
A134	STORAGE	SEE PLAN	RB1	PT1	PT1	PT1	PT1	SEE RCP				A134
A135	STORAGE	SEE PLAN	RB1	PT1	PT1	PT1	PT1	SEE RCP				A135
A136	W/C	SEE PLAN	TB2	WT4	WT2	WT2	WT2	SEE RCP				A136
A137	STORAGE	SEE PLAN	RB1	PT1	PT1	PT1	PT1	SEE RCP				A137
A138	TODDLER	SEE PLAN	RB1	PT1	PT1	PT1, TCK1	PT1	SEE RCP	PL1	PL4		A138
A139	COACH TEAM	SEE PLAN	RB1	PT1	PT1	PT1	PT1	SEE RCP	PL1	PL4		A139
A140	CORRIDOR	SEE PLAN	RB1	PT1	PT1	PT1	PT1, WT2	SEE RCP	PL1	SS1		A140
A141	BREAK ROOM	SEE PLAN	RB1	PT1, WT5	PT1, WT5	PT1	PT1	SEE RCP	PL1, PL3	SS1		A141
A142	ELECTRICAL	SEE PLAN	RB1	PT1	PT1	PT1	PT1	SEE RCP				A142
A143	CUSTODIAL OFFICE	SEE PLAN	RB1	PT1	PT1	PT1	PT1	SEE RCP				A143
A144	LAUNDRY / RECEIVING	SEE PLAN	RB1	PT1	PT1	PT1	PT1	SEE RCP	PL1	PL4		A144
A145	W/C	SEE PLAN	TB2	WT4	WT2	WT2	WT2	SEE RCP				A145
A146	CUSTODIAL	SEE PLAN	RB1	PT1	PT1	PT1	PT1	SEE RCP				A146
A147	MDF	SEE PLAN	RB1	PT1	PT1	PT1	PT1	SEE RCP				A147
A148	CHASE	SEE PLAN	RB1	PT1	PT1	PT1	PT1	SEE RCP				A148
A149	WOMENS	SEE PLAN	TB2	WT2	WT2, WT3	WT2	WT2, WT3	SEE RCP				A149
A150	MENS	SEE PLAN	TB2	WT2	WT2, WT3	WT2	WT2, WT3	SEE RCP				A150
A151	STORAGE	SEE PLAN	RB1	PT1	PT1	PT1	PT1	SEE RCP				A151
A152	OFFICE	SEE PLAN	RB1	PT1	PT1	PT1	PT1	SEE RCP				A152
A153	PRINT	SEE PLAN	RB1	PT1	PT1	PT1	PT1	SEE RCP	PL2	SS1		A153
A154	RECEPTION	SEE PLAN	RB1	WP2	PT1	WC5	PT1, PT5	SEE RCP	PL2	QTZ1		A154
A155	CONFERENCE	SEE PLAN	RB1	PT1		PT1	WC5	SEE RCP				A155
A156	OUTDOOR PLAY											A156
A157	OPEN	SEE PLAN	RB1	PT1	PT1	PT1	PT5	SEE RCP				A157
A158	CORRIDOR	SEE PLAN	RB1	PT1	PT1	PT1	PT1	SEE RCP				A158
A159	CORRIDOR	SEE PLAN	RB1	PT1	PT1	PT6		SEE RCP				A159
A160	CORRIDOR	SEE PLAN	RB1	PT6	PT1	PT1		SEE RCP				A160
A161	CORRIDOR	SEE PLAN	RB1	PT1	PT1	PT1	PT1	SEE RCP				A161

FINISH SCHEDULE GENERAL NOTES

RE: A653 for typical floor finish transition details

RE: A651 for Floor Pattern Plans

Finishes
Provide finishes as indicated in the finish schedule. Refer to interior elevations, where drawn, for clarification, dimensions and additional information. The absence of an interior elevation does not override the requirement to provide the finish indicated in the schedule.

Where a finish is partly hidden by an object, extend that finish behind the object.

Where multiple finishes are scheduled, refer to interior elevations and floor pattern plans for transition locations.

Floor: Extend floor finishes into knee spaces at cabinets, under counters and under all other objects, which in a floor plan view may obscure the extent of the floor finish.

Base: Where base is scheduled for a room, provide base at all walls whether shown in elevation, including alcoves and offsets. At gypsum board walls, if no base is scheduled or shown in interior elevations, provide 4" rubber base.

Walls: Extend wall finishes behind cabinets, behind mirrors, and into other areas that may be hidden in elevation views.

Ceilings: Paint areas above suspended ceilings that are visible from below. Color: black.

Doors, Windows and Frames: Unless specified to be pre-finished at the factory, provide paint finish on hollow metal doors and hollow metal door and window frames. Color as indicated, or if not indicated, then as selected by the Architect. Provide specified stain finish at wood doors.

Unfinished and Primed Metal Surfaces: Paint all unfinished and primed metal surfaces that are visible with the specified system(s). Color by Architect.

Standing and Running Trim: Provide specified stain finish at wood trim.

Floor Finish Transitions at Doors: Locate floor finish material transitions that occur at doors under the center of the door, UNO.

Floor Drains: Coordinate location of floor drains with Plumbing drawings.

Seaming Diagrams: Provide diagrams for broadloom carpet and sheet flooring.

Wall Covering Seams: Apply wall covering to minimize seams, to provide equal panels and locate seams no closer than 1'-0" from corners.

FINISH SCHEDULE LEGEND

BASES

RB - RUBBER BASE

TB1 - TILE BASE 1
TB2 - TILE BASE 2

WALL FINISHES

P1 - PAINTED GYPSUM BOARD
P2 - PAINTED

WC - WALL COVERING

CABINET

PLAM1 - PLASTIC LAMINATE 1
PLAM2 - PLASTIC LAMINATE 2

COUNTER TOP

PL1 - PLASTIC LAMINATE 1
SS1 - SOLID SURFACE 1
SSTL - STAINLESS STEEL

MHTN ARCHITECTS

MHTN Architects, Inc.
280 South 400 West
Suite 250
Salt Lake City, Utah 84101
Telephone (801) 595-6700
www.mhtn.com

JORDAN SCHOOL DISTRICT

JORDAN LEARNING CENTER

3706 WEST 9800 SOUTH
SOUTH JORDAN, UT 84009

©2023 MHTN ARCHITECTS, INC.

Confidentiality Notice:
This document is intended for use on the Project identified herein by individuals and companies involved in the design, permitting, bidding and construction of the Project. MHTN Architects, Inc. grants limited rights to distribute and reproduce this document for this express purpose only. Distribution, printing or copying this document for purposes other than those indicated is strictly prohibited. If a digital copy of this document is received in error, please delete it.

SEAL

STATE OF UTAH
CLIFFORD HOWARD CURTIS
No. 7394786-0301
28 AUGUST 2024
LICENSED ARCHITECT

MHTN PROJECT NO. 2024528

Original drawing is 30 x 42. Do not scale contents of this drawing.

REVISIONS
CONTRACTOR TO VERIFY DRAWINGS IN FIELD USE REFLECT LAST REVISION DATE.

NO.	DATE	DESCRIPTION

ISSUE
CONSTRUCTION DOCUMENTS
AUGUST 29, 2024

SHEET NAME
FINISH SCHEDULE AREA A

SHEET NUMBER
A640A

Autodesk Docs://2024528 JSD Retail Remodel/A24 2024528 JSD Retail Remodel.rvt
8/28/2024 7:53:46 AM

FINISH SCHEDULE AREA B

RM #	ROOM NAME	FLOOR FINISH	BASE FINISH	WALL				CEILING FINISH	CABINET FINISH	COUNTER TOP FINISH	REMARKS	RM #
				NORTH WALL FINISH	EAST WALL FINISH	SOUTH WALL FINISH	WEST WALL FINISH					
B100	LOBBY	SEE PLAN	TB1	WC1	WC1, WP1, PT2	WC1	WC1, WP1, PT4, PT5	SEE RCP				B100
B101	TECH SPECIALIST	SEE PLAN	RB1	PT1	PT1	PT1	PT1	SEE RCP	PL1	PL4		B101
B103	VIRTUAL SCHOOLS RECEPTION	SEE PLAN	RB1	PT1	PT1	PT1, WC3	PT1	SEE RCP	PL1	SS1		B103
B104	CORRIDOR	SEE PLAN	RB1	PT1	PT1	PT1	PT1	SEE RCP				B104
B105	CREDIT CENTER	SEE PLAN	RB1	PT1	PT1, PT4	PT1	PT1	SEE RCP	PL1	SS1		B105
B106	CREDIT SPECIALIST	SEE PLAN	RB1	PT1	PT1	PT1	PT1	SEE RCP				B106
B107	CORRIDOR	SEE PLAN	RB1	PT1	PT1	PT1	PT1	SEE RCP				B107
B108	WORKROOM	SEE PLAN	RB1	PT1	PT1	PT1	PT1	SEE RCP	PL1	PL4		B108
B109	OFFICE	SEE PLAN	RB1	PT1	PT1	PT1	PT1	SEE RCP				B109
B110	STORAGE	SEE PLAN	RB1	PT1	PT1	PT1	PT1	SEE RCP				B110
B111	OFFICE	SEE PLAN	RB1	PT1	PT1	PT1	PT1	SEE RCP				B111
B112	OFFICE	SEE PLAN	RB1	PT1	PT1	PT1	PT1	SEE RCP				B112
B113	OFFICE	SEE PLAN	RB1	PT1	PT1	PT1	PT1	SEE RCP				B113
B114	OFFICE	SEE PLAN	RB1	PT1	PT1	PT1	PT1	SEE RCP				B114
B115	STORAGE	SEE PLAN	RB1	PT1	PT1	PT1	PT1	SEE RCP				B115
B116	STORAGE	SEE PLAN	RB1	PT1	PT1	PT1	PT1	SEE RCP				B116
B117	OFFICE	SEE PLAN	RB1	PT1	PT1	PT1	PT1	SEE RCP				B117
B118	CONFERENCE	SEE PLAN	RB1	PT1	PT1	PT1	PT1	SEE RCP				B118
B119	MULTIPURPOSE	SEE PLAN	RB1	WC1, WP3, WC6	WP3, WC6	WC1, WP3, WC6	WP3, WC6	SEE RCP	PL1	SS1		B119
B120	FURNITURE STORAGE	SEE PLAN	RB1	PT1	PT1	PT1	PT1	SEE RCP				B120
B121	FURNITURE STORAGE	SEE PLAN	RB1	PT1	PT1	PT1	PT1	SEE RCP				B121
B122	STUDENT COMMONS	SEE PLAN	WT1	PT1, WT1, WC3	PT1, WT1	PT1, WT1	PT1, WT1	SEE RCP				B122
B123	LEARNING STUDIO	SEE PLAN	RB1	PT1, TCK2	PT1	PT1, TCK2	PT1, TCK1	SEE RCP	PL1	PL4		B123
B124	STORAGE	SEE PLAN	RB1	PT1	PT1	PT1	PT1	SEE RCP				B124
B125	LEARNING STUDIO	SEE PLAN	RB1	PT1, TCK2	PT1	PT1, TCK2	PT1	SEE RCP	PL1	PL4		B125
B126	LEARNING STUDIO	SEE PLAN	RB1	PT1, TCK2	PT1	PT1, TCK2	PT1	SEE RCP	PL1	PL4		B126
B127	SCIENCE / ART / CTE	SEE PLAN	RB1	PT1	PT1	PT1	PT1	SEE RCP	PL1	SSTL		B127
B128	TEACHER TEAM	SEE PLAN	RB1	PT1	PT1	PT1	PT1	SEE RCP				B128
B129	PREP & STORAGE	SEE PLAN	RB1	PT1	PT1	PT1	PT1	SEE RCP	PL1	SSTL		B129
B130	STORAGE	SEE PLAN	RB1	PT1	PT1	PT1	PT1	SEE RCP				B130
B131	W/C	SEE PLAN	TB2	WT2	WT5	WT2	WT4	SEE RCP				B131
B132	W/C	SEE PLAN	TB2	WT2	WT2	WT2	WT4	SEE RCP				B132
B133	CUSTODIAL	SEE PLAN	RB1	PT1	PT1	PT1	PT1	SEE RCP				B133
B134	MECH	SEE PLAN	RB1	PT1	PT1	PT1	PT1	SEE RCP				B134
B135	WAREHOUSE	SEE PLAN	PLY	PT1, PW	PT1, PW	PT1, PW	PT1, PW	SEE RCP				B135
B136	WELLNESS	SEE PLAN	RB1	PT1	PT1	PT1	PT1	SEE RCP	PL1	SS1		B136
B137	CORRIDOR	SEE PLAN	WT1	PT1, WT1	PT1, WT1	PT1, WT1	PT1, WT1	SEE RCP				B137

MHTN ARCHITECTS

MHTN Architects, Inc.
280 South 400 West
Suite 250
Salt Lake City, Utah 84101
Telephone (801) 595-6700
www.mhtn.com

JORDAN SCHOOL DISTRICT

JORDAN LEARNING CENTER

3706 WEST 9800 SOUTH
SOUTH JORDAN, UT 84009

©2023 MHTN ARCHITECTS, INC.

Confidentiality Notice:
This document is intended for use on the Project identified herein by individuals and companies involved in the design, permitting, bidding and construction of the Project. MHTN Architects, Inc. grants limited rights to distribute and reproduce this document for this express purpose only. Distribution, printing or copying this document for purposes other than those indicated is strictly prohibited. If a digital copy of this document is received in error, please delete it.

SEAL

STATE OF UTAH
CLIFFORD HOWARD CURTIS
No. 7394786-0301
28 AUGUST 2024
REGISTERED ARCHITECT

MHTN PROJECT NO. 2024528

Original drawing is 30 x 42. Do not scale contents of this drawing.

REVISIONS
CONTRACTOR TO VERIFY DRAWINGS IN FIELD USE REFLECT LAST REVISION DATE.

NO.	DATE	DESCRIPTION

ISSUE
CONSTRUCTION DOCUMENTS
AUGUST 29, 2024

SHEET NAME
FINISH SCHEDULE AREA B

SHEET NUMBER
A640B

Autodesk Docs://2024528 JSD Retail Remodel/A24 2024528 JSD Retail Remodel.rvt
8/28/2024 7:54:34 AM

FINISH SCHEDULE LEGEND

FLOOR FINISHES

			BASIS-OF-DESIGN		
CALL OUT	DESCRIPTION	COLOR	MANUFACTURER	PRODUCT/STYLE	COMMENTS
PC1	POLISHED CONCRETE	NA		SATIN/HONED POLISH FINISH	200-400 GRIT
CPT1	9" x 36" CARPET TILE	HIGH IMPACT 97111	SHAW CONTRACT	KICKOFF TILE 5T499	FIELD
CPT2	9" x 36" CARPET TILE	POSITIVE IMPACT 97676	SHAW CONTRACT	COLLABORATION TILE 5T497	ORANGE
CPT3	9" x 36" CARPET TILE	TRUE PROGRESS 97496	SHAW CONTRACT	COLLABORATION TILE 5T497	DARK BLUE
CPT4	9" x 36" CARPET TILE	STRATEGIC IMPACT 97396	SHAW CONTRACT	COLLABORATION TILE 5T497	GREEN
CPT5	9" x 36" CARPET TILE	CLEAR IMPACT 97485	SHAW CONTRACT	COLLABORATION TILE 5T497	LIGHT BLUE
CPT6	9" x 36" CARPET TILE		SHAW CONTRACT	COLLABORATION TILE 5T497	
CPT7	24" x 24" CARPET TILE	KIND OF BLUE 584	MOHAWK GROUP	CHROMATIC CADENCE B7596	LOBBY
CPT8	50cm x 50cm WALK-OFF CARPET TILE	FZX52 NAVY	MILLIKEN	OBEX, CUTX / FIZZ	
FT1	24" x 24" TERRAZZO TILE	SACRA CALACATTA WHITE - HONED	TILEBAR	TERRAZZO ITALY	3/16" GROUT COLOR: CUSTOM BUILDING PRODUCTS #
FT2	2" x 2" MOSAIC PORCELAIN TILE	WHITE PF02	DALTILE	PORTFOLI	GROUT COLOR: CUSTOM BUILDING PRODUCTS #
RT1	24" x 24" RUBBER TILE	7052 SLEDDING	NORA	NORAPLAN ENVIRONCARE 2MM	
RT2	24" x 24" RUBBER TILE	7048 PIE CONTEST	NORA	NORAPLAN ENVIRONCARE 2MM	

BASE

RB1	4" RUBBER BASE	140 FAWN	ROPPE	STANDARD TOE	
MB1	4" MILLWORK BASE	BUFFED SATIN LIGHT BRONZE	FRY REGLET	4" MILLWORK REVEAL BASE	LOBBY
TB1	12" TILE BASE	SACRA CALACATTA WHITE - HONED	TILEBAR	TERRAZZO ITALY	FT1 CUT IN HALF, CUT EDGE DOWN
TB2	12" x 24" TILE BASE	WHITE	DALTILE	PORTFOLIO	

WALL FINISHES

			BASIS-OF-DESIGN		
CALL OUT	DESCRIPTION	COLOR	MANUFACTURER	PRODUCT/STYLE	COMMENTS
WT1	12" x 24" PORCELAIN TILE	TWO SUGARS	CROSSVILLE	JAV01	GROUT COLOR: CUSTOM BUILDING PRODUCTS # INSTALLATION
WT2	12" x 24" PORCELAIN TILE	WHITE	DALTILE	PORTFOLIO	GROUT COLOR: CUSTOM BUILDING PRODUCTS # INSTALLATION
WT3	3" x 12" CERAMIC TILE	SKY	CONCEPT SURFACES	MATISSE	GROUT COLOR: CUSTOM BUILDING PRODUCTS # INSTALLATION
WT4	3" x 12" CERAMIC TILE	INK	CONCEPT SURFACES	MATISSE	GROUT COLOR: CUSTOM BUILDING PRODUCTS # INSTALLATION
WT5	4" x 4" CERAMIC TILE	ZL06 CHINA	MARAZZI	ZELLIGE NEO	GROUT COLOR: CUSTOM BUILDING PRODUCTS # INSTALLATION: MONOLITHIC
WC1	WALLCOVERING	RECON OAK QC, W5635R, BOOK VENEER MATCH RUNNING SHEET MATCH ULTRA FINISH 30%	KOROSEAL	ARBOR WOOD WALLCOVERING	
WC2	WALLCOVERING	6185W - 3	CARNEGIE	ABACUS	
WC3	CUSTOM WALL GRAPHIC	SUEDE	DREAM SCAPE	DIGITAL WALLCOVERINGS	VIRTUAL
WC4	CUSTOM WALL GRAPHIC	SUEDE	DREAM SCAPE	DIGITAL WALLCOVERINGS	CDC
WC5	CUSTOM WALL GRAPHIC	SUEDE	DREAM SCAPE	DIGITAL WALLCOVERINGS	JEF
WC6	OPERABLE PARTITION WALLCOVERING FINISH	8194 - 7	CARNEGIE	PINECREST	MULTIPURPOSE ROOM
WP1	WALL PANEL	BLONDE MAPLE, VERTICAL PATTERN ORIENTATION	SOELBERG	INCAVO, 3D WALL PANELS	BUTT JOINT PANELS, ALIGN VERTICAL PATTERN
WP2	WALL PANEL	AORAKI WALNUT W.LTH.TMB.100.WLNT. CLEAR FINISH	MATERIALS INC	TAMBORA	
WP3	WALL PANEL	BLOND ECHO 79396-18	WILSONART	PREMIUM LAMINATE 4'x8'	
WP4	ACRYLIC WALL PANEL	CUSTOM PRINTED DIGITAL IMAGE	LUMICOR	6MM LUMICLEAR , STANDARD FINISH	
PW	4' x 8' PLYWOOD PANEL, 3/4"				

CEILING

			BASIS-OF-DESIGN		
CALL OUT	DESCRIPTION	COLOR	MANUFACTURER	PRODUCT/STYLE	COMMENTS
ACP1	24" x 48" ACOUSTICAL CEILING PANEL	WHITE	ARMSTRONG	MESA 684, 3/4" EDGE: SQUARE LAY-IN 15/17	WHITE
ACP2	24" x 48" ACOUSTICAL WOOD VENEER CEILING PANEL	WHITE MAPLE,	9WOOD	3200 ACOUSTIC TILE, TEGULAR EDGE	
GB1	PAINTED GYPSUM BOARD CEILING	PAINTED PT1			
GB2	PAINTED GYPSUM BOARD CEILING	PAINTED PT2			
GB3	PAINTED GYPSUM BOARD CEILING	PAINTED PT3			
GB4	PAINTED GYPSUM BOARD CEILING	PAINTED PT4			
GB5	PAINTED GYPSUM BOARD CEILING	PAINTED PT5			
GB6	EPOXY PAINTED GYPSUM BOARD CEILING	PAINTED PT8			
ACC1	ACOUSTIC CEILING CLOUD	86 MIDNIGHT BLUE	FRASCH!	CUSTOM CLOUD	HALF CIRCLE
ACC2	ACOUSTIC CEILING CLOUD	30 BLUE	FRASCH!	CUSTOM CLOUD	SMALL TRIANGLE
ACC3	ACOUSTIC CEILING CLOUD	21 INDIGO BLUE	FRASCH!	CUSTOM CLOUD	LARGE TRIANGLE
ACC4	ACOUSTIC CEILING CLOUD	30 BLUE	FRASCH!	CUSTOM CLOUD	LARGE TRIANGLE
ACC5	ACOUSTIC CEILING CLOUD	30 BLUE	FRASCH!	CLOUD ROUND	
ACC6	ACOUSTIC CEILING CLOUD	18 ARTIC ICE	FRASCH!	CLOUD ROUND	
ACC7	ACOUSTIC CEILING CLOUD	53 SMOKY BEIGE	FRASCH!	BAFL KIT, STRAIGHT	
ACC8	ACOUSTIC CEILING CLOUD	44 IVORY	FRASCH!	BAFL KIT, STRAIGHT	
ACB1	ACOUSTIC CEILING BAFFLE	44 IVORY	FRASCH!	SKINNY BAFL, 72"	
OTSP1	OPEN TO STRUCTURE PAINTED	PAINTED PT1			DRYFALL
OTSP2	OPEN TO STRUCTURE PAINTED	PAINTED PT7			DRYFALL

MISC FINISHES

			BASIS-OF-DESIGN		
CALL OUT	DESCRIPTION	COLOR	MANUFACTURER	PRODUCT/STYLE	COMMENTS
PT1	PAINT	SNOWBOUND SW 7004	SHERWIN-WILLIAMS	LATEX, NO-VOC, SEMI GLOSS	FIELD / WHITE
PT2	PAINT	ROBUST ORANGE SW 6628	SHERWIN-WILLIAMS	LATEX, NO-VOC, SEMI GLOSS	
PT3	PAINT	SPORTY BLUE SW 6522	SHERWIN-WILLIAMS	LATEX, NO-VOC, SEMI GLOSS	
PT4	PAINT	KALE SW 6460	SHERWIN-WILLIAMS	LATEX, NO-VOC, SEMI GLOSS	
PT5	PAINT	DENIM SW 6523	SHERWIN-WILLIAMS	LATEX, NO-VOC, SEMI GLOSS	
PT6	PAINT	PARISIAN PATINA SW 9041	SHERWIN-WILLIAMS	LATEX, NO-VOC, SEMI GLOSS	
PT7	PAINT	TRICORN BLACK SW 6258	SHERWIN-WILLIAMS	LATEX, NO-VOC, SEMI GLOSS	
PT8	EPOXY PAINT	SNOWBOUND SW 7004	SHERWIN-WILLIAMS	EPOXY, LOW-VOC, SEMI GLOSS	
PL1	PLASTIC LAMINATE	BLOND ECHO 79396-18	WILSONART	PREMIUM LAMINATE	
PL2	PLASTIC LAMINATE	UPTOWN WALNUT 7971K-12 SOFTGRAIN FINISH	WILSONART	PREMIUM LAMINATE	
PL3	PLASTIC LAMINATE	SAPPHIRE BLUE	PANOLAM	FLAWLESS	BREAK ROOM
PL4	PLASTIC LAMINATE COUNTERTOP	HANDSPUN CHESTNUT 5036-38	WILSONART	FINE VELVET FINISH	
RS1	ROLLER SHADES	0952 BEIGE	MECHOSHADE	3% ECOVEIL SCREENS	MANUAL
TCK1	TACKABLE WALL COVERING	82 QUARRY	KOROSEAL	TACWALL	
TCK2	TACKABLE WALL COVERING	07 AZTEC	KOROSEAL	TACWALL	
SS1	SOLID SURFACE COUNTERTOP & WINDOWSILL	CHILLED EARTH 9228SS	WILSONART	SOLID SURFACE	
QT1	QUARTZ COUNTERTOP	INVERNESS COBALT	CAMBRIA	QUARTZ	
CG1	ALUMINUM CORNER GUARD				
WD	SOLID WOOD - MAPLE	STAINED TO MATCH PL1			

MHTN ARCHITECTS

MHTN Architects, Inc.
280 South 400 West
Suite 250
Salt Lake City, Utah 84101
Telephone (801) 595-6700
www.mhtn.com

JORDAN SCHOOL DISTRICT

JORDAN LEARNING CENTER

3706 WEST 9800 SOUTH
SOUTH JORDAN, UT 84009

©2023 MHTN ARCHITECTS, INC.

Confidentiality Notice
This document is intended for use on the Project identified herein by individuals and companies involved in the design, permitting, bidding and construction of the Project. MHTN Architects, Inc. grants limited rights to distribute and reproduce this document for such purposes only. Any other distribution and/or copying of this document for purposes other than those indicated is strictly prohibited. If a digital copy of this document is received in error, please delete it.

SEAL

STATE OF UTAH
CLIFFORD HOWARD CURTIS
No. 7394786-0301
24 AUGUST 2024
LICENSED ARCHITECT

MHTN PROJECT NO. 2024528

Original drawing is 30 x 42. Do not scale contents of this drawing.

REVISIONS
CONTRACTOR TO VERIFY DRAWINGS IN FIELD USE REFLECT LAST REVISION DATE.

NO.△	DATE	DESCRIPTION

ISSUE
CONSTRUCTION DOCUMENTS
AUGUST 29, 2024

SHEET NAME
FINISH LEGEND

SHEET NUMBER
A641

Autodesk Docs://2024528 JSD Retail Remodel/A24 2024528 JSD Retail Remodel.rvt
8/29/2024 7:54:36 AM

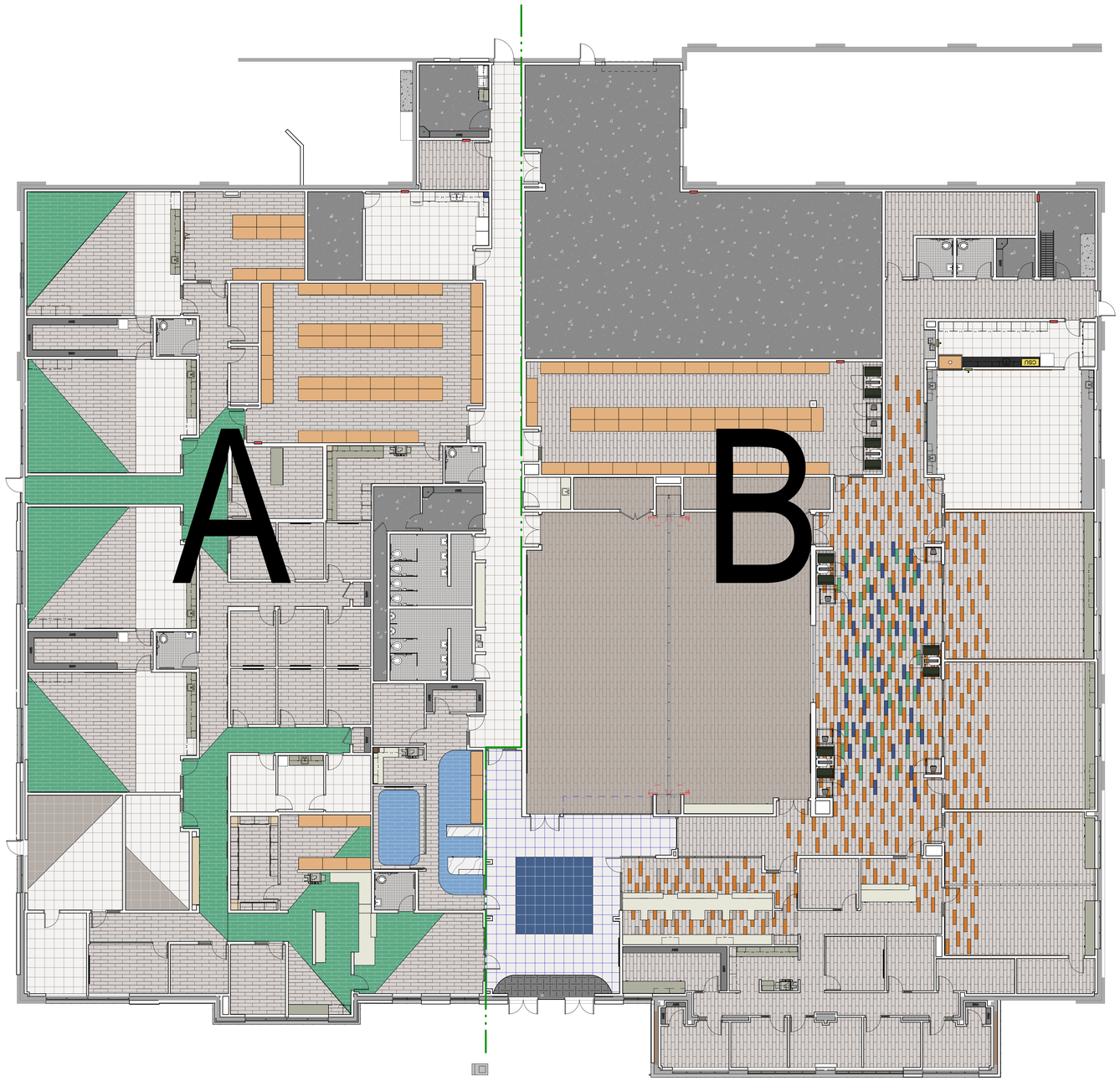

PATTERN PLAN GENERAL NOTES

RE: A640 for the Finish Schedule

RE: A653 for typical floor finish transition details

RE: Structural drawings for recessed slabs.

Floor Finish Transitions at Doors: Locate floor finish material transitions that occur at doors under the center of the door, UNO.

Floor Drains: Coordinate location of floor drains with Plumbing drawings.

LEGEND - FLOOR PATTERN

- CARPET TILE - CPT1
- CARPET TILE - CPT2
- CARPET TILE - CPT3
- CARPET TILE - CPT4
- CARPET TILE - CPT5
- CARPET TILE - CPT6
- CARPET TILE - CPT7
- WALK-OFF CARPET TILE - CPT8
- RUBBER TILE - RT1
- RUBBER TILE - RT2
- PORCELAIN TILE - FT1
- MOSAIC TILE - FT2
- SEALED CONCRETE
- POLISHED CONCRETE

FIRST FLOOR FINISH PLAN

SCALE: 3/32" = 1'-0"

0 8' - 0" 16' - 0" 32' - 0"

N

MHTN ARCHITECTS

MHTN Architects, Inc.
280 South 400 West
Suite 250
Salt Lake City, Utah 84101
Telephone (801) 595-6700
www.mhtn.com

JORDAN SCHOOL DISTRICT

JORDAN LEARNING CENTER

3706 WEST 9800 SOUTH
SOUTH JORDAN, UT 84009

©2023 MHTN ARCHITECTS, INC.

Confidentiality Notice:
This document is intended for use on the Project identified herein by individuals and companies involved in the design, permitting, bidding and construction of the Project. MHTN Architects, Inc. grants limited rights to distribute and reproduce this document for this express purpose only. Distribution, printing or copying this document for purposes other than those indicated is strictly prohibited. If a digital copy of this document is received in error, please delete it.

SEAL

STATE OF UTAH
CLIFFORD HOWARD CURTIS
No. 7394786-0301
28 AUGUST 2024
LICENSED ARCHITECT

MHTN PROJECT NO. 2024528

VIEW AND PRINT THIS DRAWING IN COLOR

Original drawing is 30 x 42. Do not scale contents of this drawing.

REVISIONS
CONTRACTOR TO VERIFY DRAWINGS IN FIELD USE REFLECT LAST REVISION DATE.

NO.	DATE	DESCRIPTION

ISSUE
CONSTRUCTION DOCUMENTS
AUGUST 29, 2024

SHEET NAME
FIRST FLOOR PATTERN PLAN

SHEET NUMBER
A651

Autodesk Docs://2024528 JSD Retail Remodel/A24 2024528 JSD Retail Remodel.rvt
8/28/2024 7:53:50 AM

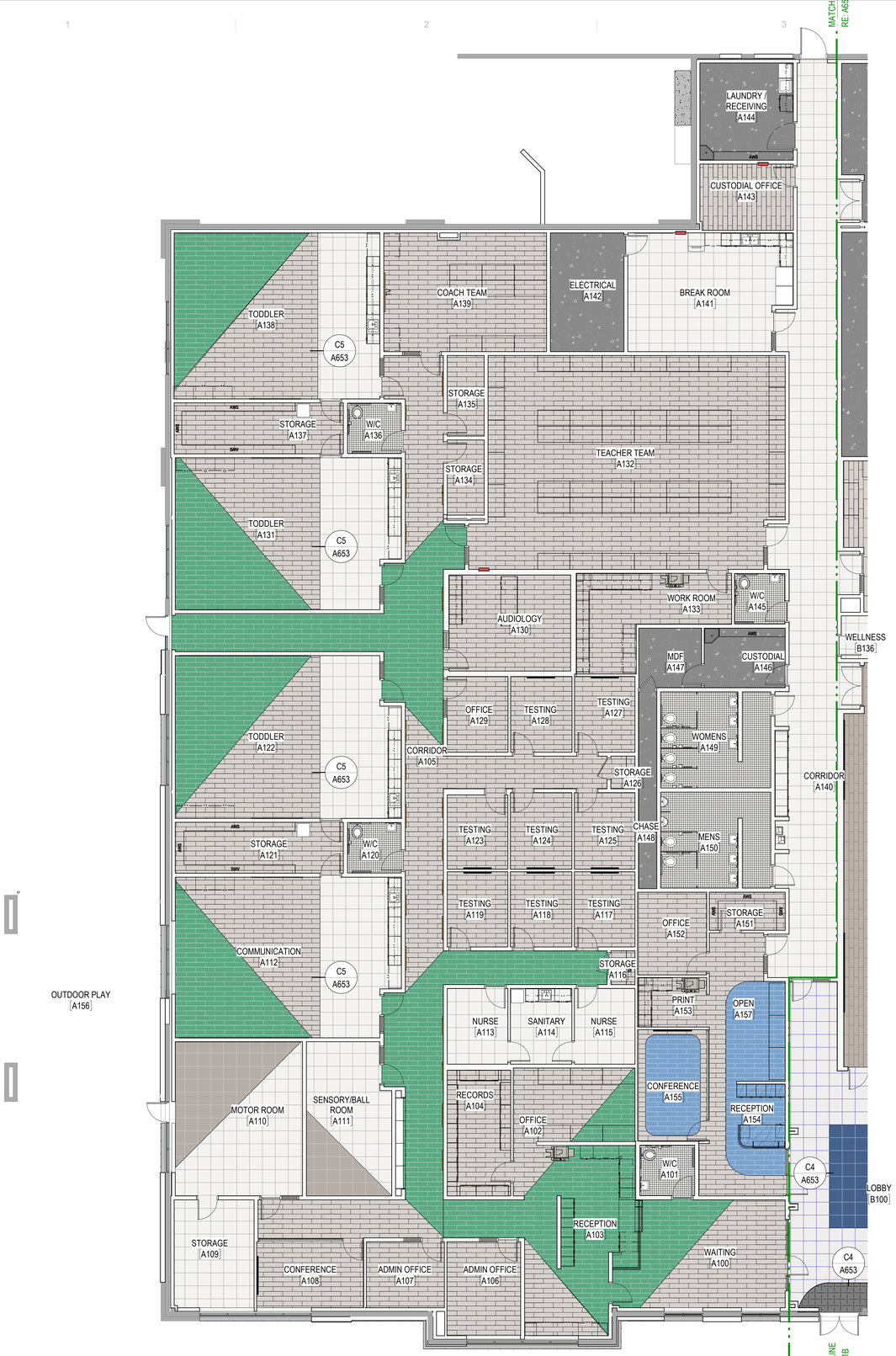

FIRST FLOOR FINISH PLAN - AREA A

SCALE: 1/8" = 1'-0"

0 4' - 0" 8' - 0" 16' - 0"

PATTERN PLAN GENERAL NOTES

RE: A640 for the Finish Schedule

RE: A653 for typical floor finish transition details

RE: Structural drawings for recessed slabs.

Floor Finish Transitions at Doors: Locate floor finish material transitions that occur at doors under the center of the door, UNO.

Floor Drains: Coordinate location of floor drains with Plumbing drawings.

LEGEND - FLOOR PATTERN

- CARPET TILE - CPT1
- CARPET TILE - CPT2
- CARPET TILE - CPT3
- CARPET TILE - CPT4
- CARPET TILE - CPT5
- CARPET TILE - CPT6
- CARPET TILE - CPT7
- WALK-OFF CARPET TILE - CPT8
- RUBBER TILE - RT1
- RUBBER TILE - RT2
- PORCELAIN TILE - FT1
- MOSAIC TILE - FT2
- SEALED CONCRETE
- POLISHED CONCRETE

MHTN ARCHITECTS

MHTN Architects, Inc.
280 South 400 West
Suite 250
Salt Lake City, Utah 84101
Telephone (801) 595-6700
www.mhtn.com

JORDAN SCHOOL DISTRICT

JORDAN LEARNING CENTER
3706 WEST 9800 SOUTH
SOUTH JORDAN, UT 84009

©2023 MHTN ARCHITECTS, INC.

Confidentiality Notice.
This document is intended for use on the Project identified herein by individuals and companies involved in the design, permitting, bidding and construction of the Project. MHTN Architects, Inc. grants limited rights to distribute and reproduce this document for this express purpose only. Distribution, printing or copying this document for purposes other than those indicated is strictly prohibited. If a digital copy of this document is received in error, please delete it.

SEAL

STATE OF UTAH
CLIFFORD HOWARD CURTIS
No. 7394786-0301
2/8 AUGUST 2024
LICENSED ARCHITECT

MHTN PROJECT NO. 2024528

Original drawing is 30 x 42. Do not scale contents of this drawing.

REVISIONS
CONTRACTOR TO VERIFY DRAWINGS IN FIELD USE REFLECT LAST REVISION DATE:

NO.	DATE	DESCRIPTION

ISSUE
CONSTRUCTION DOCUMENTS
AUGUST 29, 2024

SHEET NAME
FIRST FLOOR PATTERN PLAN - AREA A

SHEET NUMBER
A651A

Autodesk Docs://2024528 JSD Retail Remodel/A24 2024528 JSD Retail Remodel.rvt
8/28/2024 7:53:54 AM

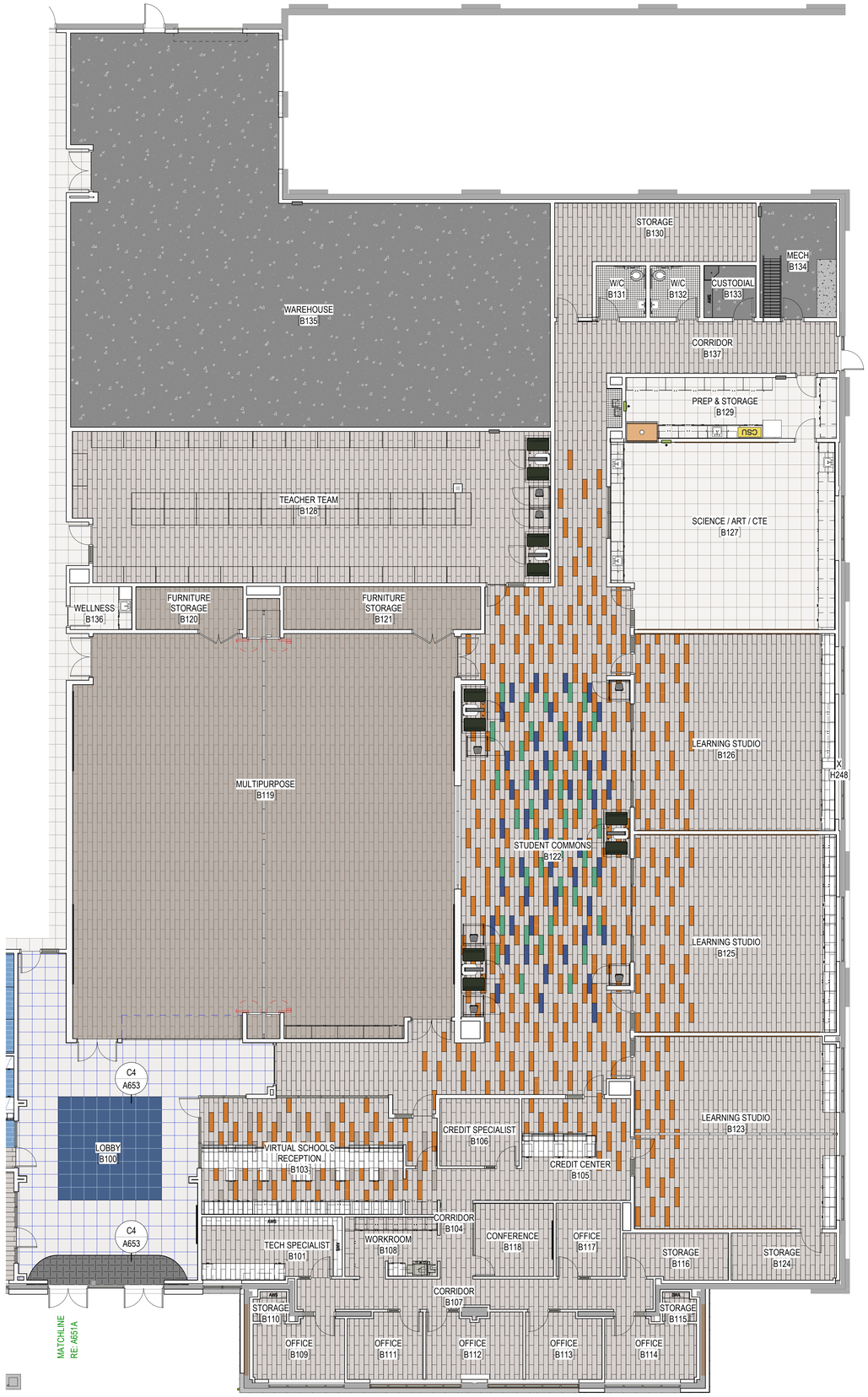

FIRST FLOOR FINISH PLAN - AREA B

SCALE: 1/8" = 1'-0"

0 4' - 0" 8' - 0" 16' - 0"

N

PATTERN PLAN GENERAL NOTES

RE: A640 for the Finish Schedule

RE: A653 for typical floor finish transition details

RE: Structural drawings for recessed slabs.

Floor Finish Transitions at Doors: Locate floor finish material transitions that occur at doors under the center of the door, UNO.

Floor Drains: Coordinate location of floor drains with Plumbing drawings.

LEGEND - FLOOR PATTERN

- CARPET TILE - CPT1
- CARPET TILE - CPT2
- CARPET TILE - CPT3
- CARPET TILE - CPT4
- CARPET TILE - CPT5
- CARPET TILE - CPT6
- CARPET TILE - CPT7
- WALK-OFF CARPET TILE - CPT8
- RUBBER TILE - RT1
- RUBBER TILE - RT2
- PORCELAIN TILE - FT1
- MOSAIC TILE - FT2
- SEALED CONCRETE
- POLISHED CONCRETE

MHTN ARCHITECTS

MHTN Architects, Inc.
280 South 400 West
Suite 250
Salt Lake City, Utah 84101
Telephone (801) 595-6700
www.mhtn.com

JORDAN SCHOOL DISTRICT

JORDAN LEARNING CENTER

3706 WEST 9800 SOUTH
SOUTH JORDAN, UT 84009

©2023 MHTN ARCHITECTS, INC.

Confidentiality Notice:
This document is intended for use on the Project identified herein by individuals and companies involved in the design, permitting, bidding and construction of the Project. MHTN Architects, Inc. grants limited rights to distribute and reproduce this document for this express purpose only. Distribution, printing or copying this document for purposes other than those indicated is strictly prohibited. If a digital copy of this document is received in error, please delete it.

SEAL

STATE OF UTAH
CLIFFORD HOWARD CURTIS
No. 7394786-0301
24 AUGUST 2024
REVISED ARCHITECT

MHTN PROJECT NO. 2024528

Original drawing is 30 x 42. Do not scale contents of this drawing.

REVISIONS
CONTRACTOR TO VERIFY DRAWINGS IN FIELD USE REFLECT LAST REVISION DATE

NO.	DATE	DESCRIPTION

ISSUE
CONSTRUCTION DOCUMENTS
AUGUST 29, 2024

SHEET NAME
FIRST FLOOR PATTERN PLAN - AREA B

SHEET NUMBER
A651B

Autodesk Docs://2024528 JSD Retail Remodel/A24 2024528 JSD Retail Remodel.rvt
8/28/2024 7:53:38 AM

LEGEND - REFLECTED CEILING PLANS

- WALL PATTERN TYPE 1 - WAINSCOT TILE
- WALL PATTERN TYPE 2 - RIBBED WALL PANEL
- WALL PATTERN TYPE 3 - WALLCOVERING
- WALL PATTERN TYPE 4 - CUSTOM WALL GRAPHIC
- WALL PATTERN TYPE 5 - CUSTOM WALL GRAPHIC
- WALL PATTERN TYPE 6 - PLASTIC LAMINATE
- WALL PATTERN TYPE 7 - CUSTOM WALL GRAPHIC
- WALL PATTERN TYPE 8 - FULL-HEIGHT TILE
- WALL PATTERN TYPE 9 - FULL-HEIGHT TILE
- WALL PATTERN TYPE 10 - FULL-HEIGHT TILE
- WALL PATTERN TYPE 11 - WAINSCOT TILE
- WALL PATTERN TYPE 12 - WALLCOVERING
- WALL PATTERN TYPE 13 - PLYWOOD WAINSCOT

FIRST FLOOR WALL PATTERN PLAN

SCALE: 1" = 10'-0"

0 8' - 0" 16' - 0" 32' - 0"

N

MHTN ARCHITECTS
MHTN Architects, Inc.
280 South 400 West
Suite 250
Salt Lake City, Utah 84101
Telephone (801) 595-6700
www.mhtn.com

JORDAN SCHOOL DISTRICT

JORDAN LEARNING CENTER

3706 WEST 9800 SOUTH
SOUTH JORDAN, UT 84009

©2023 MHTN ARCHITECTS, INC.
Confidentiality Notice:
This document is intended for use on the Project identified herein by individuals and companies involved in the design, permitting, bidding and construction of the Project. MHTN Architects, Inc. grants limited rights to include and reproduce this document for this purpose only. Distribution, printing or copying this document for purposes other than those indicated is strictly prohibited. If a digital copy of this document is received in error, please delete it.

SEAL

STATE OF UTAH
CLIFFORD HOWARD CURTIS
No. 7394786-0301
21 AUGUST 2024
LICENSED ARCHITECT

MHTN PROJECT NO. 2024528

VIEW AND PRINT THIS DRAWING IN COLOR

Original drawing is 30 x 42. Do not scale contents of this drawing.

REVISIONS
CONTRACTOR TO VERIFY DRAWINGS IN FIELD USE REFLECT LAST REVISION DATE.

NO.	DATE	DESCRIPTION

ISSUE
CONSTRUCTION DOCUMENTS
AUGUST 29, 2024

SHEET NAME
FIRST FLOOR WALL PATTERN PLAN

SHEET NUMBER
A652

Autodesk Docs://2024528 JSD Retail Remodel/A24 2024528 JSD Retail Remodel.rvt
8/28/2024 8:22:12 AM

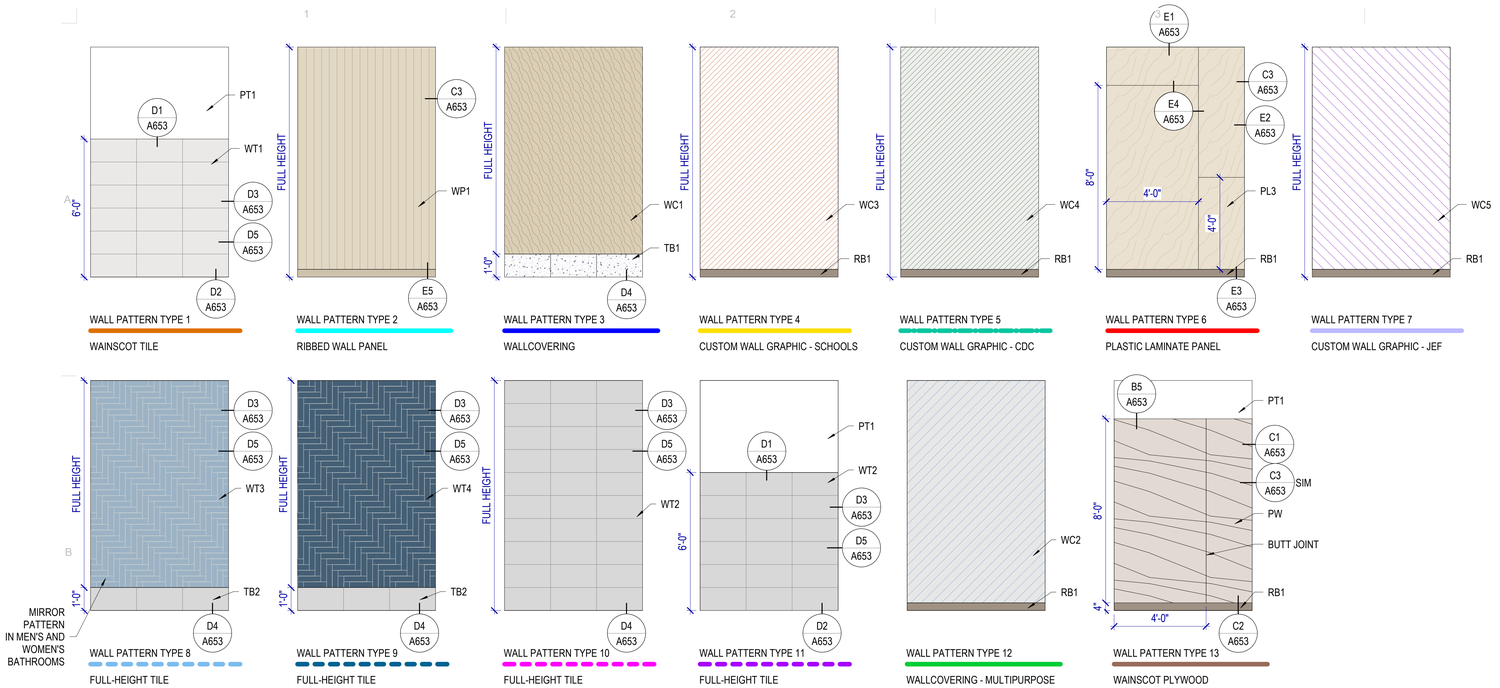

B1 WALL PATTERN PLAN ELEVATIONS

SCALE: 3/8" = 1'-0"

LEGEND - REFLECTED CEILING PLANS

- WALL PATTERN TYPE 1 - WAINSCOT TILE
- WALL PATTERN TYPE 2 - RIBBED WALL PANEL
- WALL PATTERN TYPE 3 - WALLCOVERING
- WALL PATTERN TYPE 4 - CUSTOM WALL GRAPHIC
- WALL PATTERN TYPE 5 - CUSTOM WALL GRAPHIC
- WALL PATTERN TYPE 6 - PLASTIC LAMINATE
- WALL PATTERN TYPE 7 - CUSTOM WALL GRAPHIC
- WALL PATTERN TYPE 8 - FULL-HEIGHT TILE
- WALL PATTERN TYPE 9 - FULL-HEIGHT TILE
- WALL PATTERN TYPE 10 - FULL-HEIGHT TILE
- WALL PATTERN TYPE 11 - WAINSCOT TILE
- WALL PATTERN TYPE 12 - WALLCOVERING
- WALL PATTERN TYPE 13 - PLYWOOD WAINSCOT

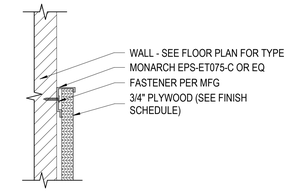

B5 PLYWOOD FINISH DETAIL

SCALE: 3" = 1'-0"

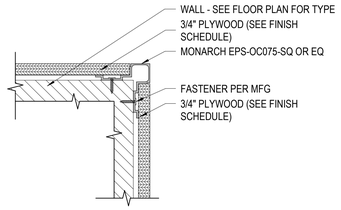

C1 PLYWOOD CORNER DETAIL

SCALE: 3" = 1'-0"

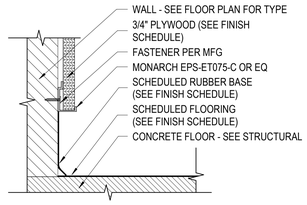

C2 PLYWOOD BASE DETAIL

SCALE: 3" = 1'-0"

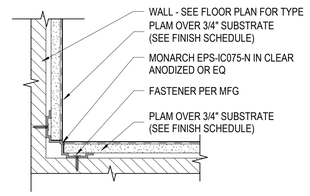

C3 PLAM PANEL - INSIDE CORNER

SCALE: 3" = 1'-0"

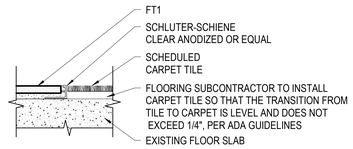

C4 TILE TO CARPET

SCALE: 3" = 1'-0"

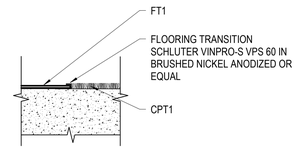

C5 RESILIENT TO CARPET

SCALE: 3" = 1'-0"

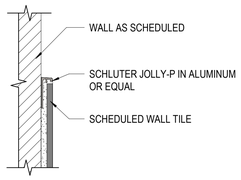

D1 WALL TILE END CAP (VERT & HOR)

SCALE: 3" = 1'-0"

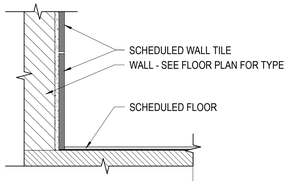

D2 WALL TILE @ FLOOR

SCALE: 3" = 1'-0"

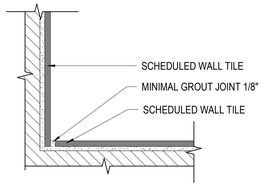

D3 TILE AT INSIDE CORNER

SCALE: 3" = 1'-0"

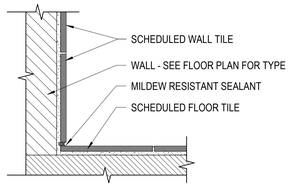

D4 WALL TILE TO FLOOR TILE

SCALE: 3" = 1'-0"

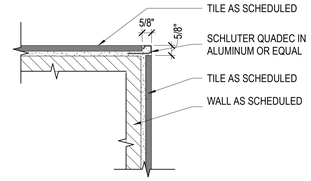

D5 TILE AT OUTSIDE CORNER

SCALE: 3" = 1'-0"

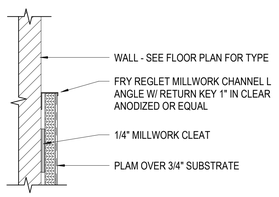

E1 LAMINATE PANEL END CAP

SCALE: 3" = 1'-0"

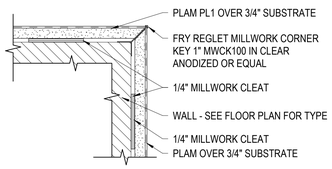

E2 LAMINATE OUTSIDE CORNER

SCALE: 3" = 1'-0"

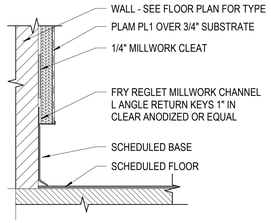

E3 LAMINATE @ BASE

SCALE: 3" = 1'-0"

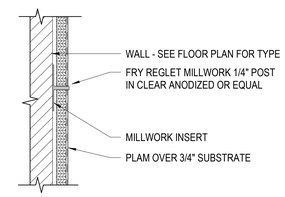

E4 LAMINATE PANEL REVEAL

SCALE: 3" = 1'-0"

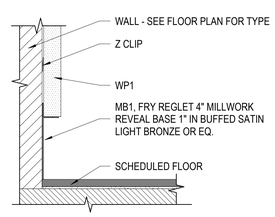

E5 MDF PANEL @ BASE

SCALE: 3" = 1'-0"

MHTN ARCHITECTS
MHTN Architects, Inc.
280 South 400 West
Suite 250
Salt Lake City, Utah 84101
Telephone (801) 595-6700
www.mhtn.com

JORDAN SCHOOL DISTRICT

JORDAN LEARNING CENTER

3706 WEST 9800 SOUTH
SOUTH JORDAN, UT 84009

©2023 MHTN ARCHITECTS, INC.

Confidentiality Notice:
This document is intended for use on the Project identified herein by individuals and companies involved in the design, permitting, bidding and construction of the Project. MHTN Architects, Inc. grants limited rights to distribute and reproduce this document for this express purpose only. Distribution, printing or copying this document for purposes other than those indicated is strictly prohibited. If a digital copy of this document is received in error, please delete it.

SEAL

STATE OF UTAH
CLIFFORD HOWARD CURTIS
No. 7394786-0301
2/4 AUGUST 2024
REGISTERED ARCHITECT

MHTN PROJECT NO. 2024528

Original drawing is 30 x 42. Do not scale contents of this drawing.

REVISIONS
CONTRACTOR TO VERIFY DRAWINGS IN FIELD USE REFLECT LAST REVISION DATE.

NO.	DATE	DESCRIPTION

ISSUE
CONSTRUCTION DOCUMENTS
AUGUST 29, 2024

SHEET NAME
WALL PATTERN DETAILS

SHEET NUMBER
A653

Autodesk Docs://2024528 JSD Retail Remodel/A24 2024528 JSD Retail Remodel.rvt
8/28/2024 8:22:14 AM

FIRST FLOOR REFLECTED CEILING PLAN

SCALE: 3/32" = 1'-0"

0 8' - 0" 16' - 0" 32' - 0"

N

REFLECTED CEILING PLAN GENERAL NOTES

RE: A710 for typical suspended ceiling details, including seismic bracing.

Ceiling Height: 10'-0" UNO. Where floor height varies in a room, ceiling height is shown at the entry to the room, UNO.

Ceiling Grid/Panel Alignment: The design intent of the Reflected Ceiling Plans is center ceiling grids or acoustical panels between walls in both directions, or to center grids in one direction, panels in the other. If the grid does not comply with the design intent, then coordinate with Architect to adjust the ceiling layout prior to installation.

Seismic Design Category: D: Heavy-duty suspension system required / Refer to Specifications.

Seismic Bracing: Rigid bracing required at ceilings over 1,000 SF and at all ceilings with fire sprinklers and other penetrations.

Seismic Control Joints: Provide seismic control joints in suspended acoustical ceilings greater than 2,500 SF.

Control Joints: Provide control joints in gypsum board ceilings at 30'-0" max spacing. Coordinate locations with Architect to align joints with other elements in the ceilings or on the walls.

Exposed Elements: Paint exposed structure, pipe, conduit and HVAC duct at open ceilings and at open areas around ceiling clouds. Color: As selected by Architect.

Walls to Deck: Extend all walls to deck, including all components of the wall assembly, UNO.

Fire Sprinklers: Center sprinkler heads in acoustical panels; run in straight lines in orthogonal, rectangular spaces.

Electrical, Mechanical and other Devices: Center in acoustical panels. Coordinate feature lighting layout with Architect prior to rough-in.

Keynotes: Not all keynotes apply to this sheet.

MHTN ARCHITECTS

MHTN Architects, Inc.
280 South 400 West
Suite 250
Salt Lake City, Utah 84101
Telephone (801) 595-6700
www.mhtn.com

JORDAN SCHOOL DISTRICT

JORDAN LEARNING CENTER

3706 WEST 9800 SOUTH
SOUTH JORDAN, UT 84009

©2023 MHTN ARCHITECTS, INC.

Confidentiality Notice.
This document is intended for use on the Project identified herein by individuals and companies involved in the design, permitting, bidding and construction of the Project. MHTN Architects, Inc. grants limited rights to distribute and reproduce this document for this express purpose only. Distribution, printing or copying this document for purposes other than those indicated is strictly prohibited. If a digital copy of this document is received in error, please delete it.

SEAL

STATE OF UTAH
CLIFFORD HOWARD CURTIS
No. 7394786-0301
2/8 AUGUST 2024
LICENSED ARCHITECT

MHTN PROJECT NO. 2024528

Original drawing is 30 x 42. Do not scale contents of this drawing.

REVISIONS
CONTRACTOR TO VERIFY DRAWINGS IN FIELD USE REFLECT LAST REVISION DATE.

NO.	DATE	DESCRIPTION

ISSUE
CONSTRUCTION DOCUMENTS
AUGUST 29, 2024

SHEET NAME
REFLECTED CEILING PLAN

SHEET NUMBER
A701

Autodesk Docs://2024528 JSD Retail Remodel/A24 2024528 JSD Retail Remodel.rvt
8/28/2024 7:54:02 AM

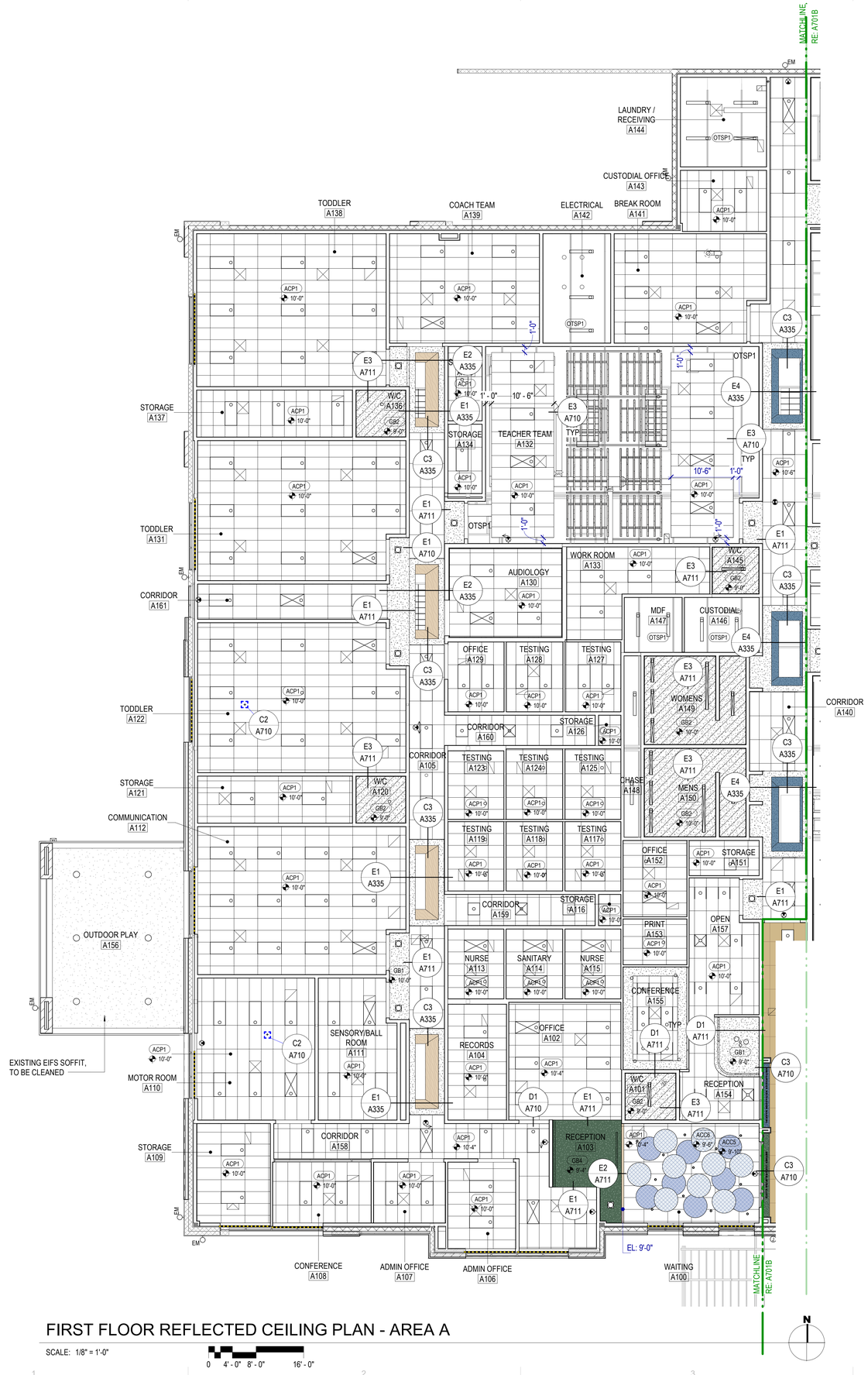

FIRST FLOOR REFLECTED CEILING PLAN - AREA A

SCALE: 1/8" = 1'-0"

0 4' - 0" 8' - 0" 16' - 0"

REFLECTED CEILING PLAN GENERAL NOTES

RE: A710 for typical suspended ceiling details, including seismic bracing.

Ceiling Height: 10'-0" UNO. Where floor height varies in a room, ceiling height is shown at the entry to the room, UNO.

Ceiling Grid/Panel Alignment: The design intent of the Reflected Ceiling Plans is center ceiling grids or acoustical panels between walls in both directions, or to center grids in one direction, panels in the other. If the grid does not comply with the design intent, then coordinate with Architect to adjust the ceiling layout prior to installation.

Seismic Design Category: D: Heavy-duty suspension system required / Refer to Specifications.

Seismic Bracing: Rigid bracing required at ceilings over 1,000 SF and at all ceilings with fire sprinklers and other penetrations.

Seismic Control Joints: Provide seismic control joints in suspended acoustical ceilings greater than 2,500 SF.

Control Joints: Provide control joints in gypsum board ceilings at 30'-0" max spacing. Coordinate locations with Architect to align joints with other elements in the ceilings or on the walls.

Exposed Elements: Paint exposed structure, pipe, conduit and HVAC duct at open ceilings and at open areas around ceiling clouds. Color: As selected by Architect.

Walls to Deck: Extend all walls to deck, including all components of the wall assembly, UNO.

Fire Sprinklers: Center sprinkler heads in acoustical panels; run in straight lines in orthogonal, rectangular spaces.

Electrical, Mechanical and other Devices: Center in acoustical panels. Coordinate feature lighting layout with Architect prior to rough-in.

Keynotes: Not all keynotes apply to this sheet.

LEGEND - REFLECTED CEILING PLANS

- ACP1 - 24" X 48" ACOUSTICAL CEILING PANEL SEE DETAIL C4 / A710
- ACP2 - 24" X 48" WOOD VENEER ACOUSTICAL CEILING PANEL A1 / A701B & C4 / A710
- GB1 - PAINTED GYPSUM BOARD SEE RCP FOR SUSPENSION DETAILS
- GB2 - PAINTED GYPSUM BOARD SEE RCP FOR SUSPENSION DETAILS
- GB3 - PAINTED GYPSUM BOARD SEE RCP FOR SUSPENSION DETAILS
- GB4 - PAINTED GYPSUM BOARD SEE RCP FOR SUSPENSION DETAILS
- GB5 - PAINTED GYPSUM BOARD SEE RCP FOR SUSPENSION DETAILS
- GB6 - EPOXY PAINTED GYPSUM BOARD SEE RCP FOR SUSPENSION DETAILS
- PL1 - PLASTIC LAMINATE OVER 3/4" SUBSTRATE
- 7'-0" / 7 BAFFLES / 7'-0" — ACC7&8 - ACOUSTIC CEILING BAFFLE, SEE DETAIL B4 / A710, UNO
- ACC2, ACC1, ACC3, ACC4 — ACC1, ACC2, ACC3 & ACC4 ACOUSTIC CEILING BAFFLE, SEE DETAIL C4 / A711 — 12'-0" AFF TYPICAL
- 9'-6" AFF TYPICAL — ACC6, ACC5 — ACC5 & ACC6 ACOUSTIC CEILING BAFFLE ATTACHED TO CEILING GRID ABOVE — 9'-10" AFF TYPICAL
- OTSP1 OPEN TO STRUCTURE - PAINTED
- OTSP2 OPEN TO STRUCTURE - PAINTED
- MECHANICAL DIFFUSERS SEE MECHANICAL
- LIGHT FIXTURES SEE ELECTRICAL
- MANUAL ROLLER SHADE

MHTN ARCHITECTS
MHTN Architects, Inc.
280 South 400 West
Suite 250
Salt Lake City, Utah 84101
Telephone (801) 595-6700
www.mhtn.com

JORDAN SCHOOL DISTRICT

JORDAN LEARNING CENTER

3706 WEST 9800 SOUTH
SOUTH JORDAN, UT 84009

©2023 MHTN ARCHITECTS, INC.
Confidentiality Notice:
This document is intended for use on the Project identified herein by individuals and companies involved in the design, permitting, bidding and construction of the Project. MHTN Architects, Inc. grants limited rights to distribute and reproduce this document for this express purpose only. Distribution, printing or copying this document for purposes other than those indicated is strictly prohibited. If a digital copy of this document is received in error, please delete it.

SEAL

STATE OF UTAH
CLIFFORD HOWARD CURTIS
No. 7394786-0301
24 AUGUST 2024
REGISTERED ARCHITECT

MHTN PROJECT NO. 2024528

Original drawing is 30 x 42. Do not scale contents of this drawing.

REVISIONS
CONTRACTOR TO VERIFY DRAWINGS IN FIELD USE REFLECT LAST REVISION DATE.

NO.	DATE	DESCRIPTION

ISSUE
CONSTRUCTION DOCUMENTS
AUGUST 29, 2024

SHEET NAME
FIRST FLOOR REFLECTED CEILING PLAN - AREA A

SHEET NUMBER
A701A

Autodesk Docs://2024528 JSD Retail Remodel/A24 2024528 JSD Retail Remodel.rvt
8/28/2024 7:54:08 AM

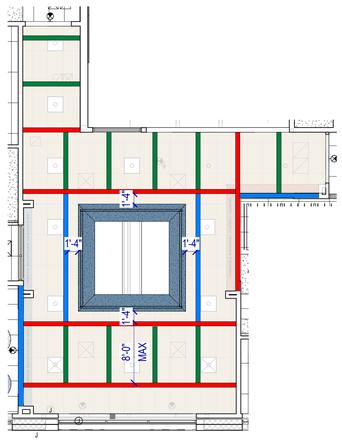

NOTE: WOOD CEILING SUSPENSION SHALL BE DIVIDED BETWEEN THE ROOF STRUCTURE AND STUD HEADERS OVERHEAD. STUD HEADERS SHALL BE LOCATED 1'-4" MINIMUM ABOVE THE SUSPENDED CEILING

LEGEND

- H3 - SEE DETAIL D3/A711
- H4 - SEE DETAIL D3/A711
- STUD 600S162-54 @ 6'-0" O.C. MAX

A1 CEILING DETAIL

SCALE: 1/8" = 1'-0"

FIRST FLOOR REFLECTED CEILING PLAN - AREA B

SCALE: 1/8" = 1'-0"

0 4' - 0" 8' - 0" 16' - 0"

REFLECTED CEILING PLAN GENERAL NOTES

RE: A710 for typical suspended ceiling details, including seismic bracing.

Ceiling Height: 10'-0" UNO. Where floor height varies in a room, ceiling height is shown at the entry to the room, UNO.

Ceiling Grid/Panel Alignment: The design intent of the Reflected Ceiling Plans is center ceiling grids or acoustical panels between walls in both directions, or to center grids in one direction, panels in the other. If the grid does not comply with the design intent, then coordinate with Architect to adjust the ceiling layout prior to installation.

Seismic Design Category: D: Heavy-duty suspension system required / Refer to Specifications.

Seismic Bracing: Rigid bracing required at ceilings over 1,000 SF and at all ceilings with fire sprinklers and other penetrations.

Seismic Control Joints: Provide seismic control joints in suspended acoustical ceilings greater than 2,500 SF.

Control Joints: Provide control joints in gypsum board ceilings at 30'-0" max spacing. Coordinate locations with Architect to align joints with other elements in the ceilings or on the walls.

Exposed Elements: Paint exposed structure, pipe, conduit and HVAC duct at open ceilings and at open areas around ceiling clouds. Color: As selected by Architect.

Walls to Deck: Extend all walls to deck, including all components of the wall assembly, UNO.

Fire Sprinklers: Center sprinkler heads in acoustical panels; run in straight lines in orthogonal, rectangular spaces.

Electrical, Mechanical and other Devices: Center in acoustical panels. Coordinate feature lighting layout with Architect prior to rough-in.

Keynotes: Not all keynotes apply to this sheet.

LEGEND - REFLECTED CEILING PLANS

- ACP1 - 24" X 48" ACOUSTICAL CEILING PANEL SEE DETAIL C4 / A710
- ACP2 - 24" X 48" WOOD VENEER ACOUSTICAL CEILING PANEL A1 / A701B & C4 / A710
- GB1 - PAINTED GYPSUM BOARD SEE RCP FOR SUSPENSION DETAILS
- GB2 - PAINTED GYPSUM BOARD SEE RCP FOR SUSPENSION DETAILS
- GB3 - PAINTED GYPSUM BOARD SEE RCP FOR SUSPENSION DETAILS
- GB4 - PAINTED GYPSUM BOARD SEE RCP FOR SUSPENSION DETAILS
- GB5 - PAINTED GYPSUM BOARD SEE RCP FOR SUSPENSION DETAILS
- GB6 - EPOXY PAINTED GYPSUM BOARD SEE RCP FOR SUSPENSION DETAILS
- PL1 - PLASTIC LAMINATE OVER 3/4" SUBSTRATE
- 7'-0" / 7 BAFFLES / 7'-0" — ACC7&8 - ACOUSTIC CEILING BAFFLE, SEE DETAIL B4 / A710, UNO
- ACC2, ACC1, ACC3, ACC4 — ACC1, ACC2, ACC3 & ACC4 ACOUSTIC CEILING BAFFLE, SEE DETAIL C4 / A711 — 12'-0" AFF TYPICAL
- 9'-6" AFF TYPICAL — ACC5 & ACC6 ACOUSTIC CEILING BAFFLE ATTACHED TO CEILING GRID ABOVE — ACC6, ACC5 — 9'-10" AFF TYPICAL
- OTSP1 OPEN TO STRUCTURE - PAINTED
- OTSP2 OPEN TO STRUCTURE - PAINTED
- MECHANICAL DIFFUSERS SEE MECHANICAL
- LIGHT FIXTURES SEE ELECTRICAL
- MANUAL ROLLER SHADE

MHTN ARCHITECTS
MHTN Architects, Inc.
280 South 400 West
Suite 250
Salt Lake City, Utah 84101
Telephone (801) 595-6700
www.mhtn.com

JORDAN SCHOOL DISTRICT

JORDAN LEARNING CENTER

3706 WEST 9800 SOUTH
SOUTH JORDAN, UT 84009

©2023 MHTN ARCHITECTS, INC.

Confidentiality Notice:
This document is intended for use on the Project identified herein by individuals and companies involved in the design, permitting, bidding and construction of the Project. MHTN Architects, Inc. grants limited rights to distribute and reproduce this document for this express purpose only. Distribution, printing or copying this document for purposes other than those indicated is strictly prohibited. If a digital copy of this document is received in error, please delete it.

SEAL

STATE OF UTAH
CLIFFORD HOWARD CURTIS
No. 7394786-0301
2/4 AUGUST 2024
LICENSED ARCHITECT

MHTN PROJECT NO. 2024528

Original drawing is 30 x 42. Do not scale contents of this drawing.

REVISIONS
CONTRACTOR TO VERIFY DRAWINGS IN FIELD. USE REFLECT LAST REVISION DATE.

NO.	DATE	DESCRIPTION

ISSUE
CONSTRUCTION DOCUMENTS
AUGUST 29, 2024

SHEET NAME
FIRST FLOOR REFLECTED CEILING PLAN - AREA B

SHEET NUMBER
A701B

Autodesk Docs://2024528 JSD Retail Remodel/A2X 2024528 JSD Retail Remodel.rvt
8/28/2024 7:54:17 AM

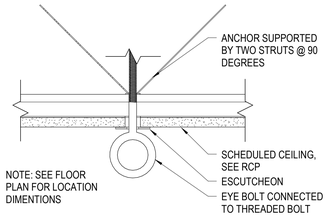

C2 EYE BOLT ANCHOR

SCALE: 3" = 1'-0"

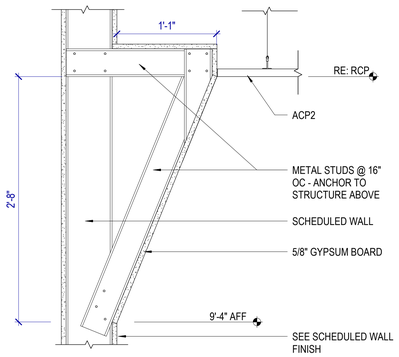

C3 CEILING DETAIL

SCALE: 1 1/2" = 1'-0"

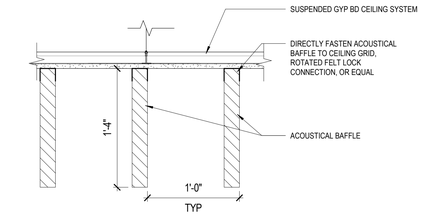

A4 BAFFLE DETAIL

SCALE: 1 1/2" = 1'-0"

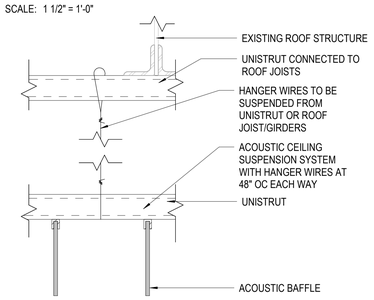

B4 BAFFLE CEILING DETAIL

SCALE: 3" = 1'-0"

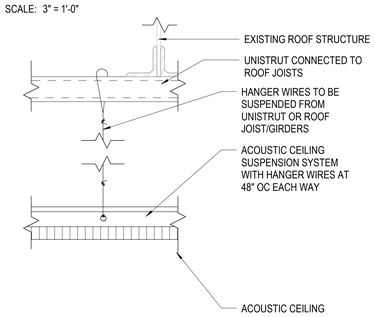

C4 TYP ACOUSTIC CEILING DETAIL

SCALE: 3" = 1'-0"

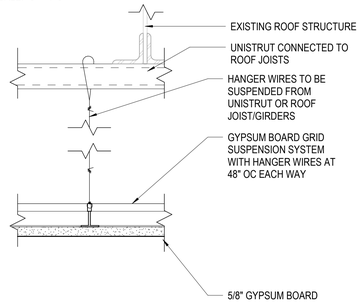

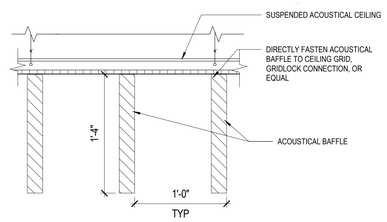

A5 BAFFLE DETAIL

SCALE: 1 1/2" = 1'-0"

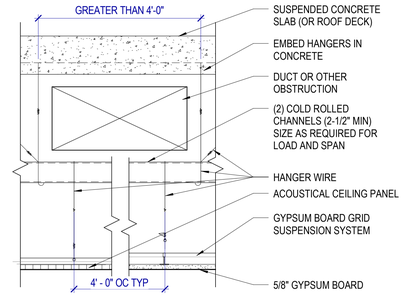

B5 CEILING GRID TRANSFER DETAIL

SCALE: 1 1/2" = 1'-0"

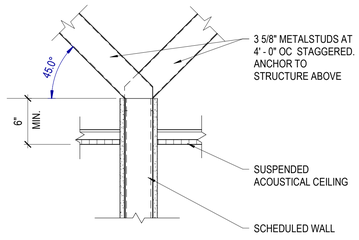

C5 CEILING DETAIL

SCALE: 1 1/2" = 1'-0"

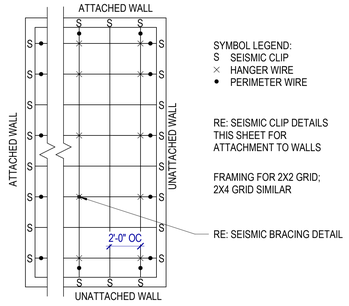

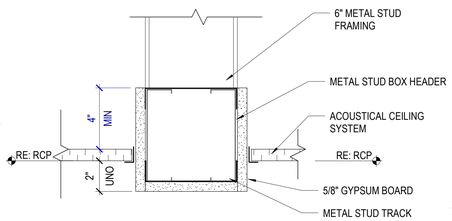

D1 CEILING DETAIL

SCALE: 3" = 1'-0"

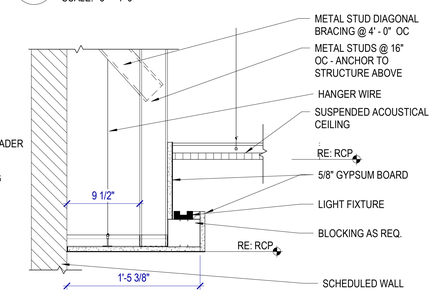

D2 CEILING DETAIL

SCALE: 1 1/2" = 1'-0"

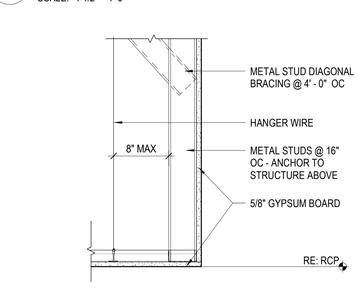

D3 CEILING DETAIL

SCALE: 1 1/2" = 1'-0"

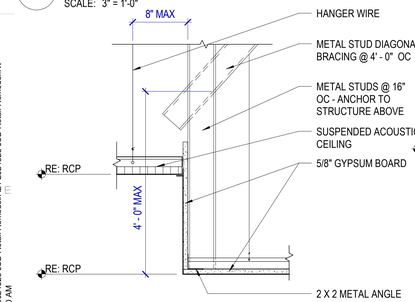

E1 CEILING DETAIL

SCALE: 1 1/2" = 1'-0"

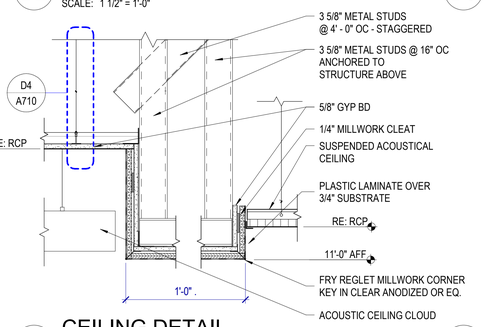

E2 CEILING DETAIL

SCALE: 1 1/2" = 1'-0"

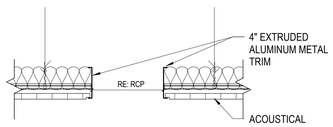

E3 CEILING DETAIL

SCALE: 1 1/2" = 1'-0"

D4 SUSPENDED GYP BD CEILING DETAIL

SCALE: 3" = 1'-0"

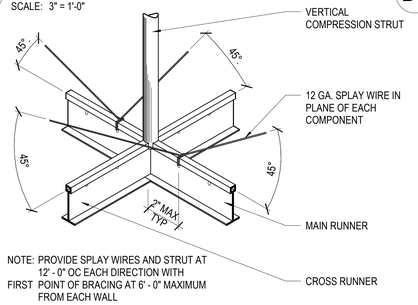

NOTE: PROVIDE SPLAY WIRES AND STRUT AT FIRST 12' - 0" OC EACH DIRECTION WITH POINT OF BRACING AT 6' - 0" MAXIMUM FROM EACH WALL

D5 TYP SUSPENDED CEILING DETAIL

SCALE: 1/4" = 1'-0"

VERTICAL COMPRESSION STRUT SCHEDULE

EMT CONDUIT	MAXIMUM SPAN
1/2"	5'-10" MAX
3/4"	7'-8" MAX
1"	9'-9" MAX
METAL STUDS	
1- 5/8" X 20 GA	12'-0"
2- 1/2" X 20 GA	13'-6"
(2)" 1- 5/8" X 20 GA	15'-0"
(2)" 2- 1/3" X 20 GA	15'-0"
*BACK-TO-BACK	

E4 SEISMIC BRACING DETAIL

SCALE: 1 1/2" = 1'-0"

MHTN ARCHITECTS
MHTN Architects, Inc.
280 South 400 West
Suite 250
Salt Lake City, Utah 84101
Telephone (801) 595-6700
www.mhtn.com

JORDAN SCHOOL DISTRICT

JORDAN LEARNING CENTER

3706 WEST 9800 SOUTH
SOUTH JORDAN, UT 84009

©2023 MHTN ARCHITECTS, INC.
Confidentiality Notice:
This document is intended for use on the Project identified herein by individuals and companies involved in the design, permitting, bidding and construction of the Project. MHTN Architects, Inc. grants limited rights to distribute and reproduce this document for this express purpose only. Distribution, printing or copying this document for purposes other than those indicated is strictly prohibited. If a digital copy of this document is received in error, please delete it.

SEAL

MHTN PROJECT NO. 2024528

Original drawing is 30 x 42. Do not scale contents of this drawing.

REVISIONS
CONTRACTOR TO VERIFY DRAWINGS IN FIELD USE REFLECT LAST REVISION DATE.

NO.	DATE	DESCRIPTION

ISSUE
CONSTRUCTION DOCUMENTS
AUGUST 29, 2024

SHEET NAME
CEILING DETAILS

SHEET NUMBER
A710

Autodesk Docs://2024528 JSD Retail Remodel/A24 2024528 JSD Retail Remodel.rvt
8/28/2024 7:54:20 AM

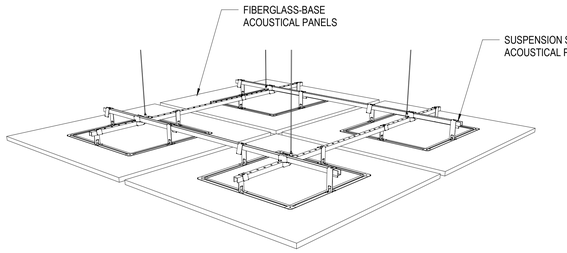

C1 CEILING DETAIL

SCALE: 6" = 1'-0"

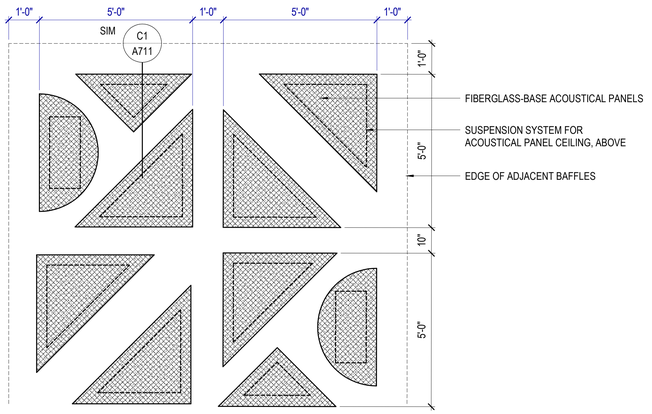

C4 CEILING DETAIL

SCALE: 1/2" = 1'-0"

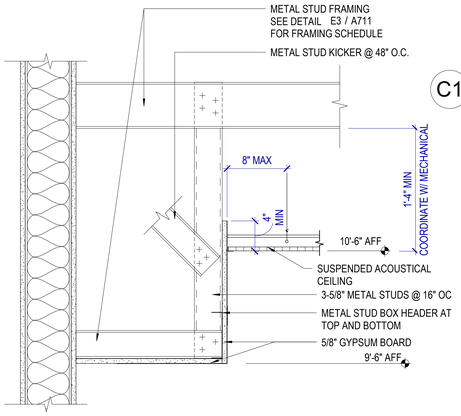

D1 CEILING DETAIL

SCALE: 1 1/2" = 1'-0"

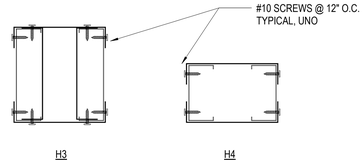

HEADERS FOR STUDS SUPPORTING GYPSUM BOARD AND WOOD CEILINGS		
TYPE	TRACK TYPE	CONNECT TO STUDS
H3	362S162-54	(4) #10 SCREWS TO VERTICAL STUDS STIFF CLIP AL800 W/ (4) #12 SCREWS
H4	400S162-54	(4) #10 SCREWS TO VERTICAL STUDS STIFF CLIP AL600 W/ (4) #12 SCREWS

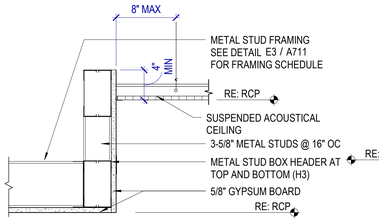

E1 CEILING DETAIL

SCALE: 1 1/2" = 1'-0"

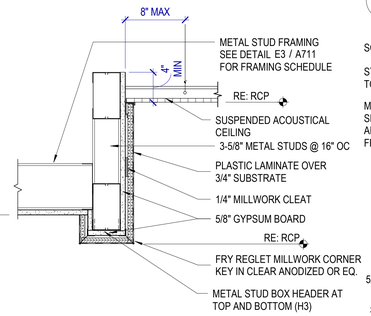

E2 CEILING DETAIL

SCALE: 1 1/2" = 1'-0"

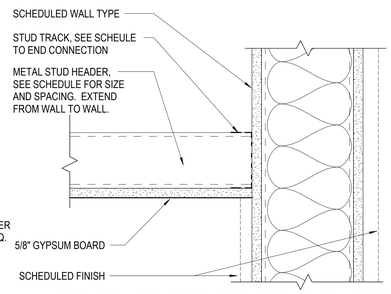

D3 STUD HEADER SCHEDULE

SCALE: 3" = 1'-0"

STUDS SUPPORTING GYPSUM BOARD CEILINGS SCHEDULE			
SPAN	MAX SPACING	STUD SIZE	END CONNECTION
LESS THAN 10'-0"	24" O.C.	362S162-54	(3) #10 SCREWS TO WALL STUD
10'-0" to 15'-0"	16" O.C.	400S162-54	(3) #10 SCREWS TO WALL STUD
15"-1" to 20'-0"	16" O.C.	(2) 600S162-54 BACK TO BACK	(3) #10 SCREWS TO WALL STUD

E3 STUD HEADER SCHEDULE - GYPSUM BOARD

SCALE: 3" = 1'-0"

MHTN ARCHITECTS
MHTN Architects, Inc.
280 South 400 West
Suite 250
Salt Lake City, Utah 84101
Telephone (801) 595-6700
www.mhtn.com

JORDAN SCHOOL DISTRICT

JORDAN LEARNING CENTER

3706 WEST 9800 SOUTH
SOUTH JORDAN, UT 84009

©2023 MHTN ARCHITECTS, INC.
Confidentiality Notice
This document is intended for use on the Project identified herein by individuals and companies involved in the design, permitting, bidding and construction of the Project. MHTN Architects, Inc. grants limited rights to distribute and reproduce this document for this express purpose only. Distribution, printing or copying this document for purposes other than those indicated is strictly prohibited. If a digital copy of this document is received in error, please delete it.

SEAL

STATE OF UTAH
CLIFFORD HOWARD CURTIS
No. 7394786-0301
2/4 AUGUST 2024
REGISTERED ARCHITECT

MHTN PROJECT NO. 2024528

Original drawing is 30 x 42. Do not scale contents of this drawing.

REVISIONS
CONTRACTOR TO VERIFY DRAWINGS IN FIELD USE REFLECT LAST REVISION DATE.

NO.△	DATE	DESCRIPTION

ISSUE
CONSTRUCTION DOCUMENTS
AUGUST 29, 2024

SHEET NAME
CEILING DETAILS

SHEET NUMBER
A711

Autodesk Docs://2024528 JSD Retail Remodel/A2A 2024528 JSD Retail Remodel.rvt
8/29/2024 7:54:22 AM

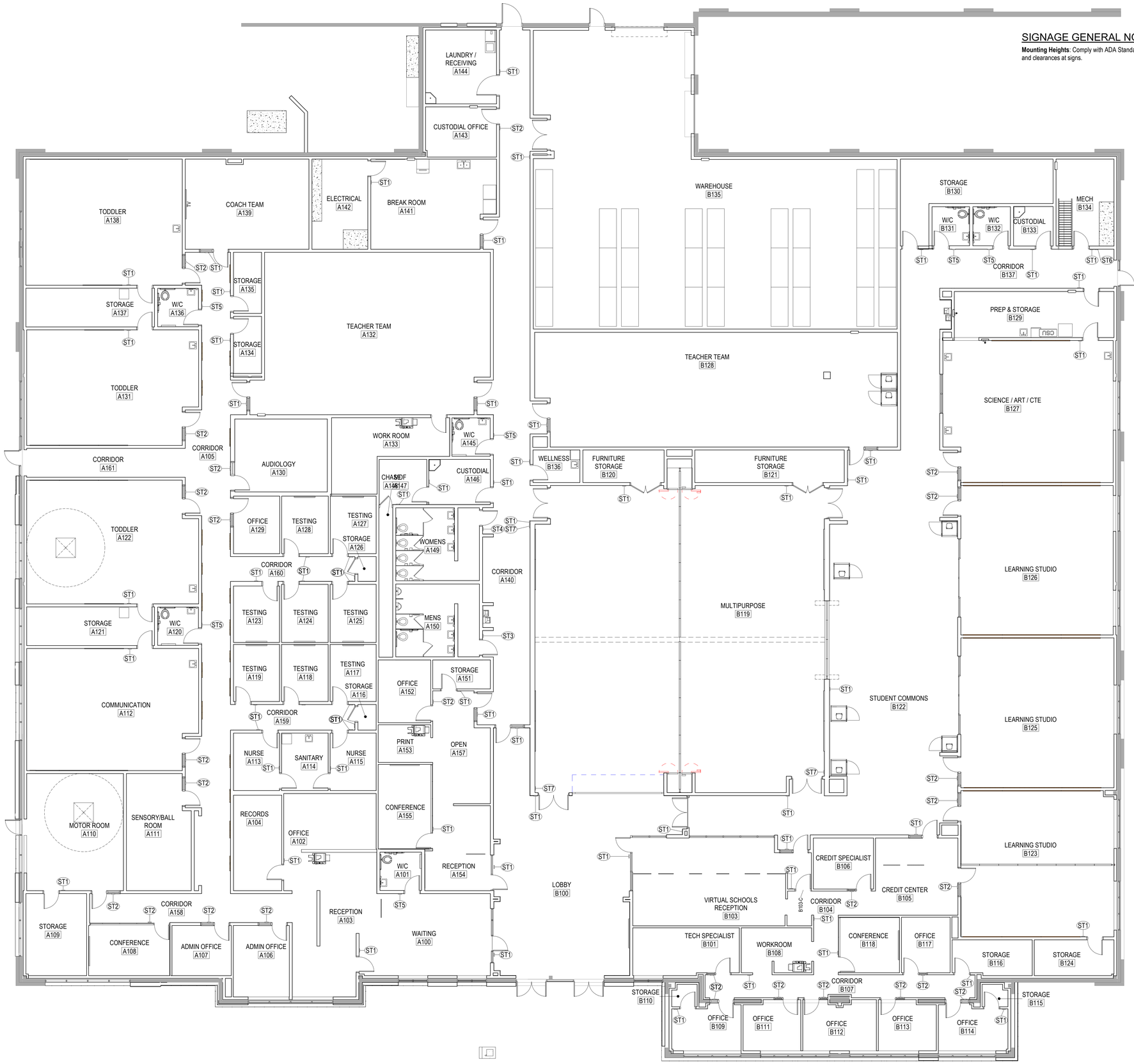

SIGNAGE GENERAL NOTES

Mounting Heights: Comply with ADA Standards and ANSI A117.1 for mounting heights and clearances at signs.

FIRST FLOOR PLAN - SIGNAGE

SCALE: 1/8" = 1'-0"

0 4' - 0" 8' - 0" 16' - 0"

MHTN ARCHITECTS

MHTN Architects, Inc.
280 South 400 West
Suite 250
Salt Lake City, Utah 84101
Telephone (801) 595-6700
www.mhtn.com

JORDAN SCHOOL DISTRICT

JORDAN LEARNING CENTER

3706 WEST 9800 SOUTH
SOUTH JORDAN, UT 84009

©2023 MHTN ARCHITECTS, INC.

Confidentiality Notice
This document is intended for use on the Project identified herein by individuals and companies involved in the design, permitting, bidding and construction of the Project. MHTN Architects, Inc. grants limited rights to distribute and reproduce this document for this express purpose only. Distribution, printing or copying this document for purposes other than those indicated is strictly prohibited. If a digital copy of this document is received in error, please delete it.

SEAL

STATE OF UTAH
CLIFFORD HOWARD CURTIS
No. 7394786-0301
2/4 AUGUST 2024
REGISTERED ARCHITECT

MHTN PROJECT NO. 2024528

Original drawing is 30 x 42. Do not scale contents of this drawing.

REVISIONS
CONTRACTOR TO VERIFY DRAWINGS IN FIELD USE REFLECT LAST REVISION DATE.

NO.△	DATE	DESCRIPTION

ISSUE
CONSTRUCTION DOCUMENTS
AUGUST 29, 2024

SHEET NAME
SIGNAGE PLAN

SHEET NUMBER
A800

Autodesk Docs://2024528 JSD Retail Remodel/A24 2024528 JSD Retail Remodel.rvt
8/29/2024 7:54:28 AM

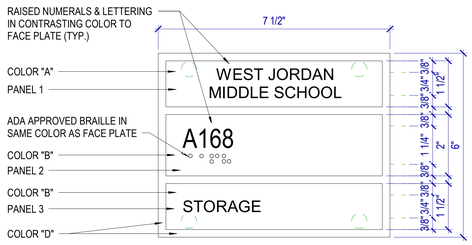

SIGN TYPE 1

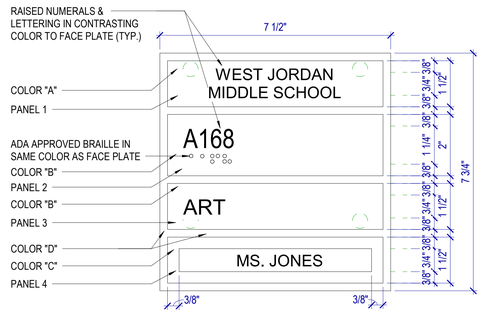

SIGN TYPE 2

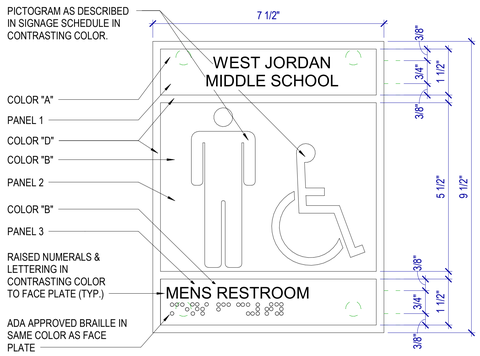

SIGN TYPE 3

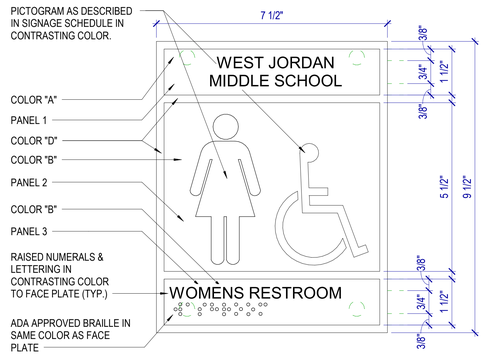

SIGN TYPE 4

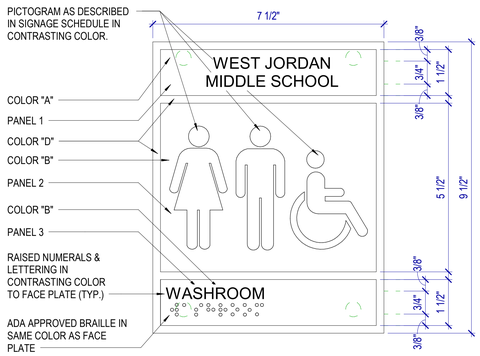

SIGN TYPE 5

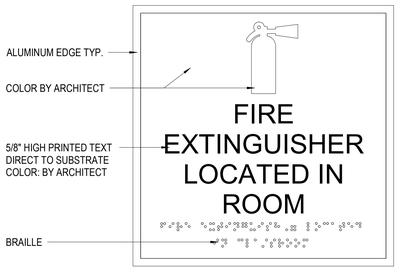

SIGNAGE TYPE 6

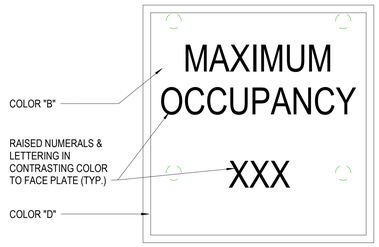

SIGN TYPE 7

SIGNAGE SCHEDULE

PLAN ROOM #	PLAN ROOM NAME	SIGN TYPE	MOUNTING TYPE	SIGN ROOM #	SIGN ROOM NAME	COMMENTS
		2				
		2				
		2				
		2				
		5				
		5				
		1				
		7				
		1				
		1				
		1				
A100	WAITING	1				
A101	W/C	5				
A102	OFFICE	1				
A105	CORRIDOR	1				
A105	CORRIDOR	1				
A105	CORRIDOR	1				
A105	CORRIDOR	1				
A106	ADMIN OFFICE	2				
A107	ADMIN OFFICE	2				
A108	CONFERENCE	2				
A110	MOTOR ROOM	1				
A111	SENSORY/BALL ROOM	2				
A112	COMMUNICATION	2				
A112	COMMUNICATION	1				
A113	NURSE	1				
A115	NURSE	1				
A120	W/C	5				
A122	TODDLER	2				
A122	TODDLER	1				
A129	OFFICE	2				
A130	AUDIOLOGY	2				
A131	TODDLER	2				
A131	TODDLER	1				
A136	W/C	5				
A138	TODDLER	2				
A138	TODDLER	1				
A140	CORRIDOR	1				
A140	CORRIDOR	1				
A140	CORRIDOR	1				
A140	CORRIDOR	1				
A140	CORRIDOR	1				
A140	CORRIDOR	1				
A140	CORRIDOR	1				
A140	CORRIDOR	1				
A141	BREAK ROOM	1				
A143	CUSTODIAL OFFICE	2				
A145	W/C	5				
A146	CUSTODIAL	1				
A147	MDF	1				
A149	WOMENS	4				
A150	MENS	3				
A152	OFFICE	2				
A155	CONFERENCE	1				
A157	OPEN	1				
A158	CORRIDOR	2				
A159	CORRIDOR	1				
A159	CORRIDOR	1				
A159	CORRIDOR	1				
A159	CORRIDOR	1				
A159	CORRIDOR	1				
A159	CORRIDOR	1				
A159	CORRIDOR	1				
A160	CORRIDOR	1				
A160	CORRIDOR	1				
A160	CORRIDOR	1				
A160	CORRIDOR	1				
A160	CORRIDOR	1				
A160	CORRIDOR	1				
A160	CORRIDOR	1				
B100	LOBBY	1				
B100	LOBBY	1				
B100	LOBBY	1				
B100	LOBBY	1				
B101	TECH SPECIALIST	2				
B103	VIRTUAL SCHOOLS RECEPTION	1				
B103	VIRTUAL SCHOOLS RECEPTION	1				
B104	CORRIDOR	1				
B105	CREDIT CENTER	2				
B106	CREDIT SPECIALIST	2				
B107	CORRIDOR	1				
B107	CORRIDOR	1				
B109	OFFICE	2				
B109	OFFICE	1				
B111	OFFICE	2				
B112	OFFICE	2				
B113	OFFICE	2				
B114	OFFICE	2				
B114	OFFICE	1				
B117	OFFICE	2				
B118	CONFERENCE	1				
B119	MULTIPURPOSE	1				
B119	MULTIPURPOSE	1				
B119	MULTIPURPOSE	7				
B119	MULTIPURPOSE	7				
B119	MULTIPURPOSE	1				
B119	MULTIPURPOSE	1				
B122	STUDENT COMMONS	1				
B122	STUDENT COMMONS	1				
B122	STUDENT COMMONS	1				
B123	LEARNING STUDIO	1				
B127	SCIENCE / ART / CTE	1				
B137	CORRIDOR	1				
B137	CORRIDOR	1				
B137	CORRIDOR	1				
B137	CORRIDOR	1				
B137	CORRIDOR	6				

MHTN ARCHITECTS
MHTN Architects, Inc.
280 South 400 West
Suite 250
Salt Lake City, Utah 84101
Telephone (801) 595-6700
www.mhtn.com

JORDAN SCHOOL DISTRICT

JORDAN LEARNING CENTER

3706 WEST 9800 SOUTH
SOUTH JORDAN, UT 84009

©2023 MHTN ARCHITECTS, INC.

Confidentiality Notice
This document is intended for use on the Project identified herein by individuals and companies involved in the design, permitting, bidding and construction of the Project. MHTN Architects, Inc. grants limited rights to distribute and reproduce this document for this express purpose only. Distribution, printing or copying this document for purposes other than those indicated is strictly prohibited. If a digital copy of this document is received in error, please delete it.

SEAL

MHTN PROJECT NO. 2024528

Original drawing is 30 x 42. Do not scale contents of this drawing.

REVISIONS
CONTRACTOR TO VERIFY DRAWINGS IN FIELD USE REFLECT LAST REVISION DATE.

NO.	DATE	DESCRIPTION

ISSUE
CONSTRUCTION DOCUMENTS
AUGUST 29, 2024

SHEET NAME
SIGNAGE SCHEDULE

SHEET NUMBER
A801

Autodesk Docs://2024528 JSD Retail Remodel/A24 2024528 JSD Retail Remodel.rvt
8/28/2024 7:54:32 AM

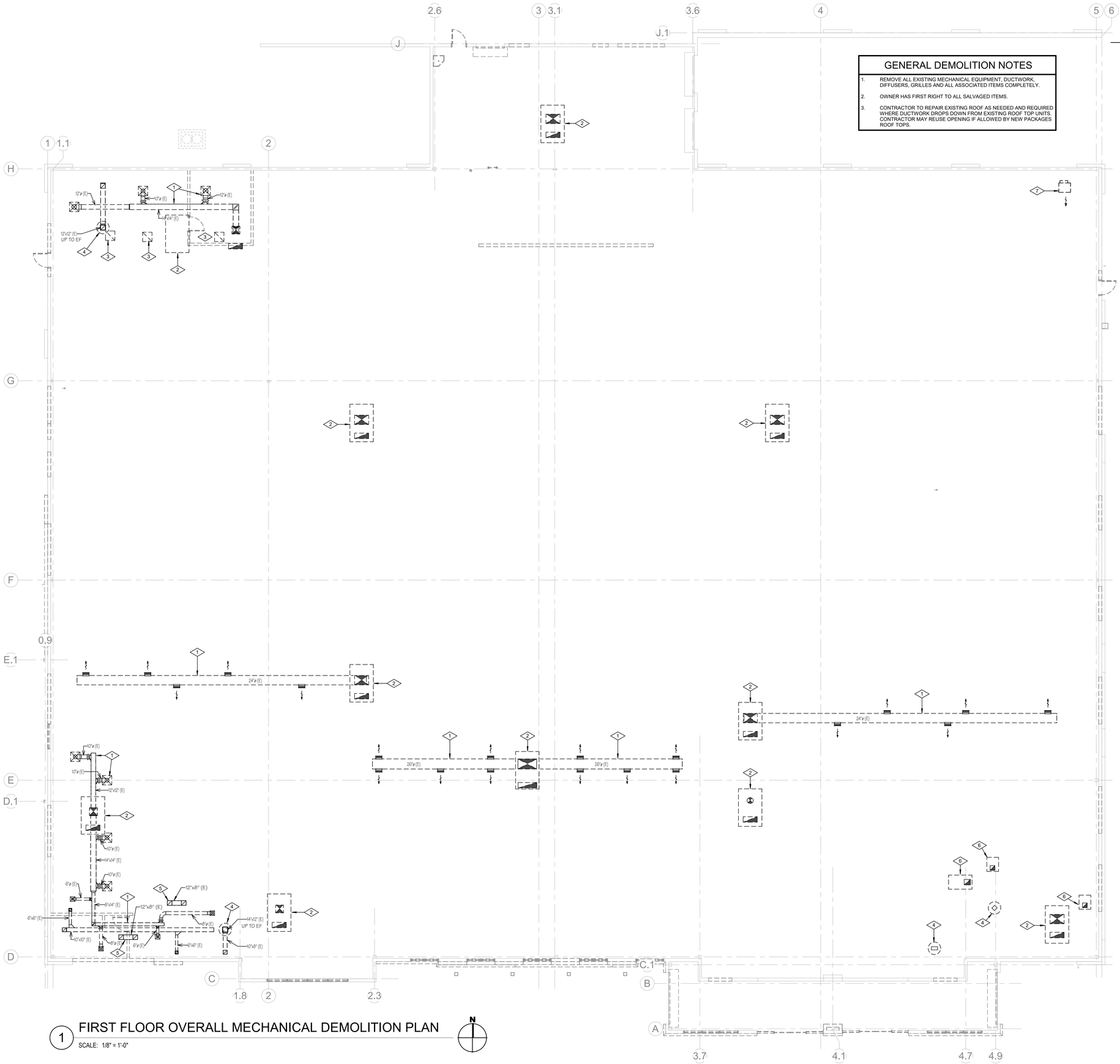

GENERAL DEMOLITION NOTES

1. REMOVE ALL EXISTING MECHANICAL EQUIPMENT, DUCTWORK, DIFFUSERS, GRILLES AND ALL ASSOCIATED ITEMS COMPLETELY.
2. OWNER HAS FIRST RIGHT TO ALL SALVAGED ITEMS.
3. CONTRACTOR TO REPAIR EXISTING ROOF AS NEEDED AND REQUIRED WHERE DUCTWORK DROPS DOWN FROM EXISTING ROOF TOP UNITS. CONTRACTOR MAY REUSE OPENING IF ALLOWED BY NEW PACKAGES ROOF TOPS.

REFERENCE NOTES

1. REMOVE EXISTING SUPPLY AIR DUCTWORK AND ASSOCIATED SUPPLY DIFFUSERS FROM PACKAGE ROOF TOP UNIT COMPLETELY.
2. REMOVE EXISTING PACKAGE ROOF TOP UNIT, CURB, AND ASSOCIATED ITEMS COMPLETELY. COORDINATE WITH NEW WORK PLAN. PATCH AND REPAIR ROOF DECK AS NEEDED.
3. REMOVE EXISTING RETURN GRILLE AND ALL ASSOCIATED ITEMS COMPLETELY.
4. REMOVE EXISTING EXHAUST FAN AND ASSOCIATED DUCTWORK AND GRILLES COMPLETELY. CAP AND SEAL EXISTING CURB WEATHER TIGHT.
5. REMOVE EXISTING TRANSFER AIR GRILLE AND ALL ASSOCIATED ITEMS COMPLETELY.
6. REMOVE EXISTING MECHANICAL EQUIPMENT AND ANY ASSOCIATED ITEMS COMPLETELY. CAP AND SEAL EXISTING CURBS WEATHER TIGHT.
7. REMOVE EXISTING UNIT HEATER AND ASSOCIATED ITEMS COMPLETELY.

1 FIRST FLOOR OVERALL MECHANICAL DEMOLITION PLAN

SCALE: 1/8" = 1'-0"

MHTN ARCHITECTS
MHTN Architects, Inc.
280 South 400 West
Suite 250
Salt Lake City, Utah 84101
Telephone (801) 595-6700
www.mhtn.com

OLSEN & PETERSON
consulting engineers, inc.
14 East 2700 South, Salt Lake City, UT 84115
Phone: (801) 486-4646 Fax: (801) 467-2551

JORDAN SCHOOL DISTRICT

JORDAN LEARNING CENTER

3706 WEST 9800 SOUTH
SOUTH JORDAN, UT 84009

©2023 MHTN ARCHITECTS, INC.

Confidentiality Notice
This document is intended for use on the Project identified herein by individuals and companies involved in the design, permitting, bidding and construction of the Project. MHTN Architects, Inc. grants limited rights to distribute and reproduce this document for purposes related to the Project. Distributing or reproducing this document for purposes other than those indicated is strictly prohibited. If a digital copy of this document is received in error, please delete it.

SEAL

LICENSED PROFESSIONAL ENGINEER
#334524-2202
JAMES AUSTIN BERRETT
8/27/2024
UTAH

MHTN PROJECT NO. 2024528

Original drawing is 30 x 42. Do not scale contents of this drawing.

REVISIONS
CONTRACTOR TO VERIFY DRAWINGS IN FIELD USE REFLECT LAST REVISION DATE.

NO.	DATE	DESCRIPTION

ISSUE
CONSTRUCTION DOCUMENTS
AUGUST 29, 2024

SHEET NAME
FIRST FLOOR MECHANICAL DEMOLITION PLAN

SHEET NUMBER
MD101

Autodesk Docs://2024528 -ISD Retail Remodel/MECH24 -ISD Retail Remodel.rvt
8/27/2024 9:20:56 PM

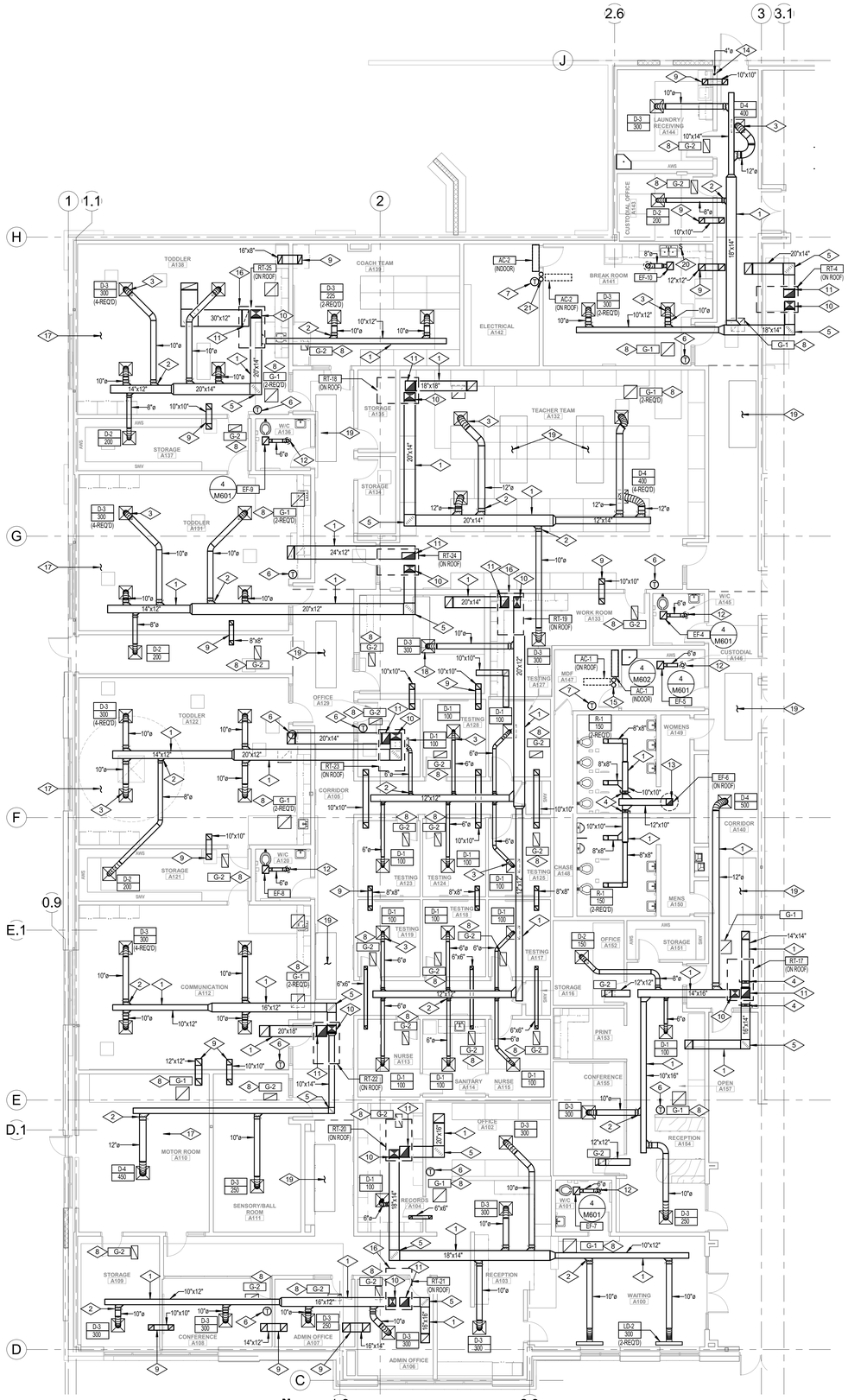

1 FIRST FLOOR MECHANICAL PLAN - AREA A

SCALE: 1/8" = 1'-0"

REFERENCE NOTES

1. DUCTWORK TO RUN AS HIGH AS POSSIBLE ABOVE CEILING. COORDINATE ROUTING WITH ALL TRADES (TYPICAL).
2. HIGH EFFICIENCY TAKE-OFF FITTING WITH VOLUME CONTROL BALANCING DAMPER (TYPICAL).
3. FLEXIBLE DUCTWORK. MAXIMUM LENGTH 5'-0" (TYPICAL).
4. MANUAL VOLUME CONTROL BALANCING DAMPER (TYPICAL).
5. TURNING VANES (TYPICAL).
6. WALL MOUNTED HEATING/COOLING THERMOSTAT (TYPICAL).
7. WALL MOUNTED, HARD WIRED COOLING/HEATING THERMOSTAT TO CONTROL OPERATION OF AIR CONDITIONING UNIT "AC-1".
8. PROVIDE DUCT BOARD SOUND BOOT AT RETURN AIR GRILLE (TYPICAL). SEE DETAIL 13/M601.
9. TRANSFER AIR DUCT ABOVE CEILING (TYPICAL). SEE DETAIL 9/M601.
10. SUPPLY AIR DUCT DOWN THRU ROOF FROM ROOFTOP UNIT. COORDINATE EXACT LOCATION WITH STRUCTURE AND UNIT PROVIDED.
11. RETURN AIR DUCT UP THRU ROOF FROM ROOFTOP UNIT. COORDINATE EXACT LOCATION WITH STRUCTURE AND UNIT PROVIDED.
12. 6" DIA. EXHAUST AIR DUCT UP THRU ROOF. TERMINATE DUCT 24" ABOVE ROOF IN NON-BACKDRAFT TYPE VENT CAP. SEE DETAIL 7/M602.
13. EXHAUST AIR DUCT RISE THRU ROOF. MAINTAIN A MINIMUM OF 15 -0 FROM ALL OUTSIDE AIR INTAKES.
14. 4" DIA. ALUMINUM VENT DROP FROM ABOVE CEILING TO SERVE CLOTHES DRYER. PROVIDE PRE-FABRICATED DRYER BOX SIMILAR TO "DRYERBOX DB-480" IN WALL AT CONNECTION POINT.
15. REFRIGERANT PIPING RISE THRU ROOF TO OUTDOOR AIR CONDITIONING UNIT "AC-1".
16. NEW PACKAGE ROOF TOP TO BE LOCATED WHERE EXISTING ROOFTOP WAS LOCATED. MAKE ALL REQUIRED ADJUSTMENTS FOR NEW ROOFTOP DUCT PENETRATIONS. COORDINATE WITH ARCHITECTURAL & STRUCTURAL DRAWINGS.
17. COORDINATE DUCTWORK ROUTING WITH STRUCTURAL FRAMING FOR SWING IN THIS AREA.
18. COORDINATE LOCATION OF SUPPLY DIFFUSER WITH LOCATION OF AUDIO BOOTH. DON T LOCATE DIRECTLY ABOVE BOOTH.
19. SKYLIGHT LOCATED IN THIS AREA. NO ROUTING OF DUCTWRK IS ALLOWED.
20. 0-2 HR TIMER SWITCH BY ATC CONTRACTOR.
21. REFRIGERANT PIPING RISE THRU ROOF TO OUTDOOR AIR CONDITIONING UNIT "AC-2".

MHTN ARCHITECTS
MHTN Architects, Inc.
280 South 400 West
Suite 250
Salt Lake City, Utah 84101
Telephone (801) 595-6700
www.mhtn.com

OLSEN & PETERSON consulting engineers, inc.
14 East 2700 South, Salt Lake City, UT 84115
Phone: (801) 486-4646 Fax: (801) 467-2551

JORDAN SCHOOL DISTRICT

JORDAN LEARNING CENTER

3706 WEST 9800 SOUTH
SOUTH JORDAN, UT 84009

©2023 MHTN ARCHITECTS, INC.
Confidentiality Notice:
This document is intended for use on the Project identified herein by individuals or entities that are authorized in the design, permitting, bidding and construction of the Project. MHTN Architects, Inc. grants limited rights to distribute and reproduce this document for this express purpose only. Distribution, printing or copying this document for purposes other than those indicated is strictly prohibited. If a digital copy of this document is received in error, please delete it.

SEAL:

PROFESSIONAL ENGINEER LICENSED #334524-2202 JAMES AUSTIN BERRETT 8/21/2024 UTAH

MHTN PROJECT NO. 2024528

Original drawing is 30 x 42. Do not scale contents of this drawing.

REVISIONS
CONTRACTOR TO VERIFY DRAWINGS IN FIELD USE REFLECT LAST REVISION DATE.

NO.	DATE	DESCRIPTION

ISSUE
CONSTRUCTION DOCUMENTS
AUGUST 29, 2024

SHEET NAME
FIRST FLOOR MECHANICAL PLAN AREA A

SHEET NUMBER
M101A

Autodesk Docs://2024528 JSD Retail Remodel/MEC24 JSD Retail Remodel.rvt
8/27/2024 5:21:02 PM

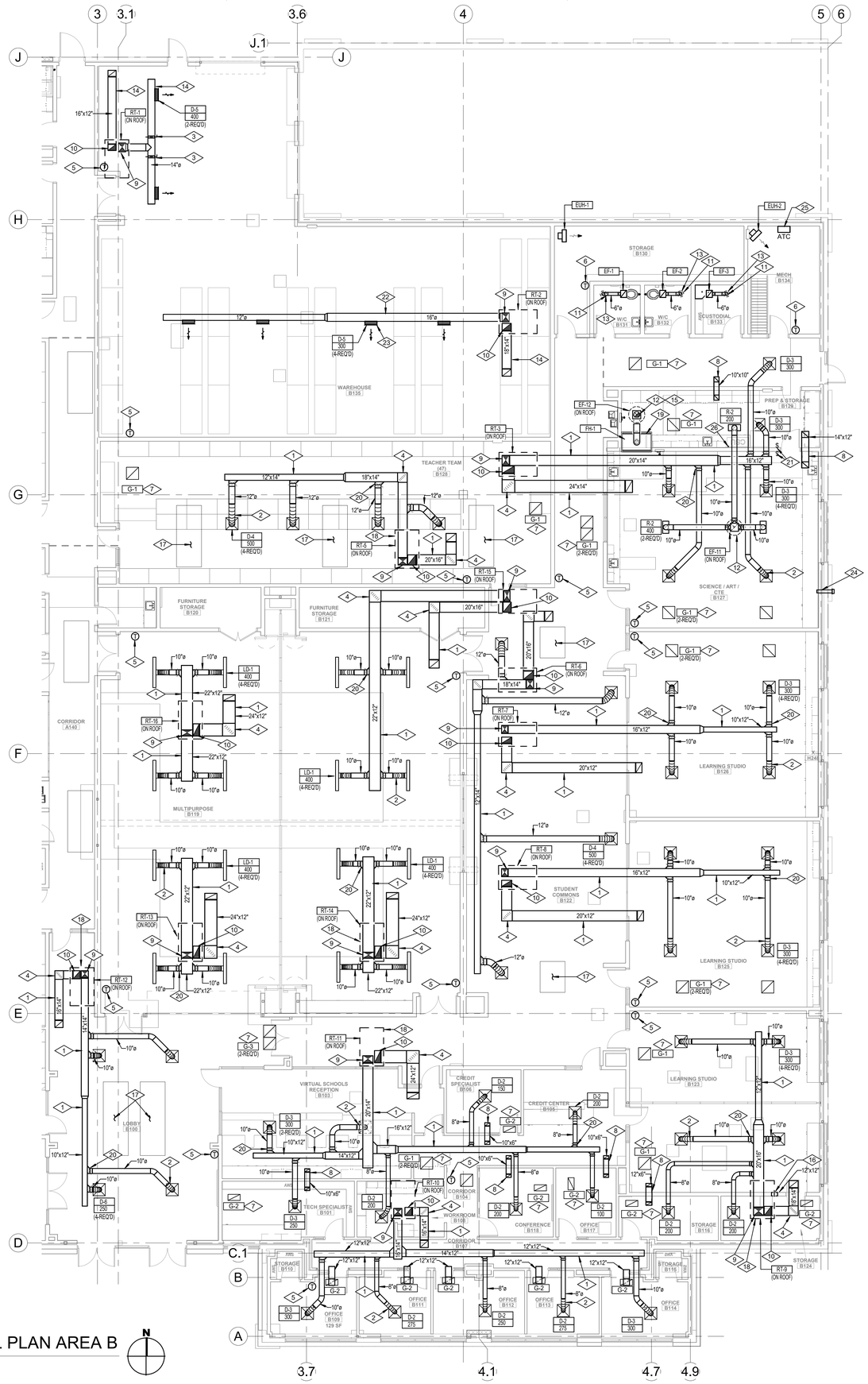

REFERENCE NOTES

#	
1	DUCTWORK TO RUN AS HIGH AS POSSIBLE ABOVE CEILING. COORDINATE ROUTING WITH ALL TRADES (TYPICAL).
2	FLEXIBLE DUCTWORK. MAXIMUM LENGTH 5'-0" (TYPICAL).
3	MANUAL VOLUME CONTROL BALANCING DAMPER (TYPICAL).
4	TURNING VANES (TYPICAL).
5	WALL MOUNTED HEATING/COOLING THERMOSTAT (TYPICAL).
6	WALL MOUNTED TEMPERATURE SENSOR. (TYPICAL).
7	PROVIDE DUCT BOARD SOUND BOOT AT RETURN AIR GRILLE (TYPICAL). SEE DETAIL 13/M601.
8	TRANSFER AIR DUCT ABOVE CEILING (TYPICAL). SEE DETAIL 9/M601.
9	SUPPLY AIR DUCT DOWN THRU ROOF FROM ROOFTOP UNIT. COORDINATE EXACT LOCATION WITH STRUCTURE AND UNIT PROVIDED.
10	RETURN AIR DUCT UP THRU ROOF FROM ROOFTOP UNIT. COORDINATE EXACT LOCATION WITH STRUCTURE AND UNIT PROVIDED.
11	6" DIA. EXHAUST AIR DUCT UP THRU ROOF. TERMINATE DUCT 24" ABOVE ROOF IN NON-BACKDRAFT TYPE VENT CAP. SEE DETAIL 7/M602.
12	EXHAUST AIR DUCT RISE THRU ROOF. MAINTAIN A MINIMUM OF 15'-0" FROM ALL OUTSIDE AIR INTAKES.
13	DUCT THRU ROOF. COORDINATE WITH STRUCTURE.
14	DUCTWORK TO RUN EXPOSED CENTERED BETWEEN JOISTS.
15	FUME HOOD EXHAUST DUCT THRU ROOF. WELDED STAINLESS STEEL IS REQUIRED.
16	PROVIDE OPENING IN WALL ABOVE CEILING.
17	SKYLIGHT LOCATED IN THIS AREA. NO ROUTING OF DUCTOWRK IS ALLOWED.
18	NEW PACKAGE ROOF TOP TO BE LOCATED WHERE EXISTING ROOFTOP WAS LOCATED. MOVE ALL REQUIRED ADJUSTMENTS FOR NEW ROOFTOP DUCT PENETRATIONS. COORDINATE WITH ARCHITECTURAL & STRUCTURAL DRAWINGS.
19	CONNECT EXHAUST DUCT TO FUME HOOD.
20	HIGH EFFICIENCY TAKE-OFF FITTING WITH VOLUME CONTROL BALANCING DAMPER (TYPICAL).
21	0-2 HR TIMER SWITCH WITH PILOT LIGHT TO CONTROL EXHAUST FAN 'EF-11' SWITCH TO BE PROVIDED BY ATC CONTRACTOR.
22	DUCTWORK TO RUN EXPOSED THRU EXISTING JOIST WEBBING. COORDINATE WITH NEW & EXISTING CONDITIONS.
23	INSTALL SUPPLY DIFFUSER BETWEEN JOIST.
24	INSTALL 4" DRY VENT JUST ABOVE CABINET ELEVATION. COORDINATE WITH OWNER PRIOR TO INSTALLING.
25	ATC PANEL. DIV. 26 CONTRACTOR TO PROVIDE 120/1/60 SERVICE.
26	VENT CHEMICAL STORGE CABINET WITH 2" PVC PIPE. PVC PIPE TO VENT UP THRU THE ROOF.

1 FIRST FLOOR MECHANICAL PLAN AREA B

SCALE: 1/8" = 1'-0"

MHTN ARCHITECTS
MHTN Architects, Inc.
280 South 400 West
Suite 250
Salt Lake City, Utah 84101
Telephone (801) 595-6700
www.mhtn.com

OLSEN & PETERSON
consulting engineers, inc.
14 East 2700 South, Salt Lake City, UT 84115
Phone: (801) 486-4646 Fax: (801) 467-2551

JORDAN SCHOOL DISTRICT

JORDAN LEARNING CENTER

3706 WEST 9800 SOUTH
SOUTH JORDAN, UT 84009

©2023 MHTN ARCHITECTS, INC.

Confidentiality Notice:
This document is intended for use on the Project identified herein by individuals and companies involved in the design, permitting, bidding and construction of the Project. MHTN Architects, Inc. grants limited rights to distribute and reproduce this document for this express purpose only. Distribution, printing or copying this document for purposes other than those indicated is strictly prohibited. If a digital copy of this document is received in error, please delete it.

SEAL

LICENSED PROFESSIONAL ENGINEER
#334534-2202
JAMES AUSTIN BERRETT
8/21/2024
UTAH

MHTN PROJECT NO. 2024528

Original drawing is 30 x 42. Do not scale contents of this drawing.

REVISIONS
CONTRACTOR TO VERIFY DRAWINGS IN FIELD USE REFLECT LAST REVISION DATE.

NO. △	DATE	DESCRIPTION

ISSUE
CONSTRUCTION DOCUMENTS
AUGUST 29, 2024

SHEET NAME
FIRST FLOOR MECHANICAL PLAN AREA B

SHEET NUMBER
M101B

Autodesk Docs://2024528 JSD Retail Remodel/MECH24 JSD Retail Remodel.rvt
8/27/2024 5:21:07 PM

GAS FIRE / DX ROOF TOP UNIT SCHEDULE

SYMBOL	LOCATION	CFM	E.S.P	MIN. O.A. CFM	DX - COOLING CAPACITY			GAS - HEATING CAPACITY			POWER	MCA	MOCP	RT-SIZE	UNIT WTS. LBS	MAKE & MODEL	NOTES
					GROSS DX MBH	GROSS DX SENSIBLE MBH	DX EFFICIENCY	GAS MBH INPUT	GAS MBH OUTPUT	GAS EFFICIENCY							
RT-1	WAREHOUSE	800	0.5"	150	28.55	19.23	17.40 SEER	40.0 / 53.6	32.0 / 43.2	81	480-3-60	9	15	74.4" L x 46.6 W x 33.4" H	700	48GCDJ04	1-7
RT-2	WAREHOUSE	1200	.65"	150	31.81	23.24	17.40 SEER	40.0 / 53.6	32.0 / 43.2	81	480-3-60	9	15	74.4" L x 46.6 W x 33.4" H	900	48GCDJ04	1-7
RT-3	SCIENCE/ART/CTE	1800	.75"	600	54.51	48.41	17.40 SEER	96.0 / 120.0	76.0 / 96.0	80	480-3-60	12	15	74.4" L x 46.6 W x 41.4" H	900	48GCFJ06	1-7
RT-4	CUSTODIAL OFFICE	1500	.75"	250	44.7	34.24	17.40 SEER	65.6 / 88.0	52.0 / 70.4	80	480-3-60	12	15	74.4" L x 46.6 W x 33.4" H	900	48GCEJ05	1-7
RT-5	TEACHER TEAM B128	2000	.75"	500	64.43	50.71	17.40 SEER	72.00 / 100.00	52.0 / 82.0	80	480-3-60	17	20	88.1" L x 59.5" W x 41.3" H	900	48GCEM07	1-7
RT-6	STUDENT COMMONS	2000	.75"	700	45.5	42.0	17.40 SEER	72.00 / 100.00	52.0 / 82.0	80	480-3-60	17	20	88.1" L x 59.5" W x 41.3" H	900	48GCEM07	1-7
RT-7	LEARNING STUDIO B126	1200	.75"	400	32.0	28.0	17.40 SEER	65.6 / 88.0	52.0 / 70.4	80	480-3-60	9	15	74.4" L x 46.6 W x 33.4" H	900	48GCEJ04	1-7
RT-8	LEARNING STUDIO B125	1200	.75"	400	32.0	28.0	17.40 SEER	65.6 / 88.0	52.0 / 70.4	80	480-3-60	9	15	74.4" L x 46.6 W x 33.4" H	900	48GCEJ04	1-7
RT-9	LEARNING STUDIO B123	1600	.75"	400	45.5	37.5	17.40 SEER	65.6 / 88.0	52.0 / 70.4	80	480-3-60	12	15	74.4" L x 46.6 W x 33.4" H	900	48GCEJ05	1-7
RT-10	ADMIN OFFICES	1400	.65"	200	44.0	32.8	17.40 SEER	40.0 / 53.6	32.0 / 43.2	81	480-3-60	12	15	74.4" L x 46.6 W x 33.4" H	900	48GCDJ05	1-7
RT-11	VIRTUAL SCHOOL	1700	.65"	350	53.0	47.0	17.40 SEER	65.6 / 88.0	52.0 / 70.4	80	480-3-60	12	15	74.4" L x 46.6 W x 41.4" H	900	48GCEJ06	1-7
RT-12	LOBBY	1000	.65"	150	30.4	21.4	17.40 SEER	40.0 / 53.6	32.0 / 43.2	81	480-3-60	9	15	74.4" L x 46.6 W x 33.4" H	900	48GCDJ04	1-7
RT-13	MULTI-PURPOSE	1600	.65"	700	45.2	43.40	17.40 SEER	96.0 / 120.0	76.8 / 96.0	80	480-3-60	12	15	74.4" L x 46.6 W x 33.4" H	900	48GCTJ05	1-7
RT-14	MULTI-PURPOSE	1600	.65"	700	45.2	43.40	17.40 SEER	96.0 / 120.0	76.8 / 96.0	80	480-3-60	12	15	74.4" L x 46.6 W x 33.4" H	900	48GCTJ05	1-7
RT-15	MULTI-PURPOSE	1600	.75"	700	45.2	43.40	17.40 SEER	96.0 / 120.0	76.8 / 96.0	80	480-3-60	12	15	74.4" L x 46.6 W x 33.4" H	900	48GCTJ05	1-7
RT-16	MULTI-PURPOSE	1600	.65"	700	45.2	43.40	17.40 SEER	96.0 / 120.0	76.8 / 96.0	80	480-3-60	12	15	74.4" L x 46.6 W x 33.4" H	900	48GCTJ05	1-7
RT-17	RECEPTION	1300	.75"	600	32.49	31.78	17.40 SEER	65.6 / 88.0	52.0 / 70.4	80	480-3-60	9	15	74.4" L x 46.6 W x 33.4" H	900	48GCEJ04	1-7
RT-18	TEACHER TEAM A132	1700	.75"	600	53.77	47.8	17.40 SEER	65.6 / 88.0	52.0 / 70.4	80	480-3-60	12	15	74.4" L x 46.6 W x 41.4" H	900	48GCEJ06	1-7
RT-19	TESTING/OFFICES	1500	.85"	500	52.45	43.70	17.40 SEER	65.6 / 88.0	52.0 / 70.4	80	480-3-60	12	15	74.4" L x 46.6 W x 33.4" H	900	48GCEJ06	1-7
RT-20	RECEPTION	1600	.75"	300	45.61	35.59	17.40 SEER	40.0 / 53.6	32.0 / 43.2	81	480-3-60	12	15	74.4" L x 46.6 W x 33.4" H	900	48GCDJ05	1-7
RT-21	ADMIN OFFICES	1150	0.5"	200	42.00	30.09	17.40 SEER	40.0 / 53.6	32.0 / 43.2	81	480-3-60	12	15	74.4" L x 46.6 W x 33.4" H	900	48GCDJ05	1-7
RT-22	COMMUNICATION A112	1900	.75"	500	55.38	46.66	17.40 SEER	65.6 / 88.0	52.0 / 70.4	80	480-3-60	12	15	74.4" L x 46.6 W x 33.4" H	900	48GCEJ06	1-7
RT-23	TODDLER A122	1400	.75"	400	33.36	28.89	17.40 SEER	65.6 / 88.0	52.0 / 70.4	80	480-3-60	9	15	74.4" L x 46.6 W x 33.4" H	900	48GCEJ04	1-7
RT-24	TODDLER A131	1400	.75"	400	33.36	28.89	17.40 SEER	65.6 / 88.0	52.0 / 70.4	80	480-3-60	9	15	74.4" L x 46.6 W x 33.4" H	900	48GCEJ04	1-7
RT-25	TODDLER A138	1900	.75"	400	33.36	28.89	17.40 SEER	65.6 / 88.0	52.0 / 70.4	80	480-3-60	9	15	74.4" L x 46.6 W x 33.4" H	900	48GCEJ04	1-7

NOTES:
1. DX COOLING CAPACITY TO BE BASED ON 98.0 DEG. AMBIENT, 80 DEG. EAT (DB) ABD 63 DEG (WB).
2. 2- STAGE COOLING.
3. NATURAL GAS
4. PROJECT ALTITUDE 4500.
5. PROVIDE 2" PLEATED FILTERS, 24" FACTORY CURB, FACTORY DISCONNECT, AND HAIL GUARDS. BACNET OR LON CARD, THRU THE BASE NON-FUSED DISCONNECT, HINGED PANELS.
6. PROVIDE FACTORY UN-POWERED 15 AMP @ 120/1/60 CONVENIENCE OUTLET.
7. PROVIDE 100% ECONOMIZER.

DIFFUSER SCHEDULE

SYMBOL	TYPE	SIZE	LOCATION	AIR PATTERN	MAKE & MODEL	NOTES (5)
D-1	SUPPLY	6"ø	CEILING	4-WAY	PRICE - SPD	2
D-2	SUPPLY	8"ø	CEILING	4-WAY	PRICE - SPD	2
D-3	SUPPLY	10"ø	CEILING	4-WAY	PRICE - SPD	2
D-4	SUPPLY	12"ø	CEILING	4-WAY	PRICE - SPD	2
D-5	SUPPLY	24"x6"	DUCT MTD.	ADJUST.	PRICE - HCD	3
D-6	SUPPLY	10"ø	CEILING	4-WAY	PRICE - SPD	1

NOTE:
1. CUSTOM COLOR, COORDINATE WITH ARCHITECT.
2. GRILLE SHALL HAVE BRIGHT WHITE FINISH AND FLANGE FOR LAY-IN CEILING.
3. PROVIDE WITH SHEET METAL BOOT.

GRILLES SCHEDULE

SYMBOL	TYPE	SIZE	LOCATION	MAKE & MODEL	NOTES
G-1	RETURN	24"x24"	CEILING	PRICE - 530	1,2
G-2	RETURN	12"x12"	CEILING	PRICE - 530	1,2
G-3	RETURN	24"x24"	CEILING	PRICE - 10	1,3

NOTE:
1. COLOR AND FINISH TO MATCH CEILING GRID. COORDINATE WITH ARCHITECT. SUPPLIER OF REGISTERS AND GRILLES SHALL COORDINATE WITH REFLECTED CEILING PLANS TO DETERMINE PROPER FRAMES.
2. GRILLE SHALL HAVE BRIGHT WHITE FINISH AND FLANGE FOR LAY-IN CEILING.
3. GRILLE SHALL HAVE A CUSTOM COLOR FINISH. SELECTION BY ARCHITECT.

REGISTER SCHEDULE

SYMBOL	TYPE	SIZE	LOCATION	MAKE & MODEL	NOTES
R-1	EXHAUST	8"x8"	CEILING - GYP.	PRICE - 630	1-2
R-2	EXHAUST	12"x24"	CEILING	PRICE - 10	1

NOTE:
1. COLOR AND FINISH TO MATCH CEILING GRID, COORDINATE WITH ARCHITECT. SUPPLIER OF REGISTERS AND GRILLES SHALL COORDINATE WITH REFLECTED CEILING PLANS TO DETERMINE PROPER FRAMES.
2. REGISTERS TO BE C/W OPPOSED BLADE VOLUME CONTROL DAMPER.

LINEAR DIFFUSER SCHEDULE

SYMBOL	TYPE	NUMBER OF SLOTS	SIZE	AIR PATTERN	MAKE & MODEL	NOTES
LD-1	--	1 @ 3"	10"ø	ADJUST	PRICE- AS / PLENUM	1-5
LD-2	T-BAR	1 @ 2.5"	10"ø	ADJUST	PRICE- AS / PLENUM	1-4, 6

NOTE:
1. COLOR & FINISH TO BE BLACK. ARCHITECT TO SELECT .
2. INTERIOR DEFLECTOR OF DIFFUSER SHALL BE FLAT BLACK.
3. MAXIMUM NC OF 22 AT DESIGN CFM.
4. ALL LINEAR DIFFUSERS MUST BE SUPPORTED FROM OVERHEAD CONSTRUCTION INDEPENDENT OF CEILING WITH AT LEAST 2-WIRES.
5. PROVIDE WITH SHEET METAL PLENUM PAINT BLACK.
6. BRIGHT WHITE FINISH WITH T-BAR INSTALLATION

EXHAUST FAN SCHEDULE

SYMBOL	TYPE	CFM	E.S.P	MOTOR	DRIVE	UNIT WTS. LBS	MAKE & MODEL	NOTES
EF-1	CEILING MTD.	75	.25"	1/8 HP 115/1/60	DIRECT	23	TWIN CITY T100	2,4
EF-2	CEILING MTD.	75	.25"	1/8 HP 115/1/60	DIRECT	23	TWIN CITY T100	2,4
EF-3	CEILING MTD.	75	.25"	1/8 HP 115/1/60	DIRECT	23	TWIN CITY T100	2,4
EF-4	CEILING MTD.	75	.25"	1/8 HP 115/1/60	DIRECT	23	TWIN CITY T100	2,4
EF-5	CEILING MTD.	75	.25"	1/8 HP 115/1/60	DIRECT	23	TWIN CITY T100	2,4
EF-6	ROOF MTD.	600	.35"	1/8 HP 115/1/60	DIRECT	73	TWIN CITY VCU098	1
EF-7	CEILING MTD.	75	.25"	1/8 HP 115/1/60	DIRECT	23	TWIN CITY T100	2,4
EF-8	CEILING MTD.	75	.25"	1/8 HP 115/1/60	DIRECT	23	TWIN CITY T100	2,4
EF-9	CEILING MTD.	75	.25"	1/8 HP 115/1/60	DIRECT	23	TWIN CITY T100	2,4
EF-10	CEILING MTD.	75	.25"	1/8 HP 115/1/60	DIRECT	23	TWIN CITY T100	2,4
EF-11	ROOF MTD.	1000	.35"	1/4 HP 115/1/60	DIRECT	116	TWIN CITY VCU140	1,3
EF-12	ROOF MTD.	800	.4"	1/6 HP 115/1/60	DIRECT	73	TWIN CITY VCU110	1,5

NOTES:
1. EXHAUST FANS TO BE ROOF-MOUNTED CENTRIFUGAL TYPE, COMPLETE WITH SPUN ALUMINUM HOOD, BIRDSCREEN, DISCONNECT SWITCH UNDER HOOD, 16" PREFAB CURB AND BACKDRAFT DAMPER.
2. CEILING MOUNTED EXHAUST FANS TO BE COMPLETE WITH SIGHT TIGHT BAR-TYPE CEILING GRILLE, BACKDRAFT DAMPERS, SPEED CONTROLLER AND FLEXIBLE CONNECTION ON DISCHARGE DUCT.
3. FAN TO OPERATE ON WALL SWITCH WITH 0-2 HOUR TIMER AND PILOT LIGHT. SEE SPECIFICATIONS.
4. TURN ON WITH LIGHTS W/ 10 MIN DELAY. SEE SPECIFICATIONS.
5. EXHAUST FAN TO TIE INTO FUME HOOD 'FH-1'. SEE SPECIFICATIONS.

ELECTRIC UNIT HEATER

SYMBOL	LOCATION	MOUNTING	CFM	HEATING M.B.H	H.P.	POWER	MAKE & MODEL	NOTES
EUH-1	STORAGE	WALL MTD. BRACKET	380	17,100	1/40 H.P.	208/1/60	MODINE - HER - 50	1-3
EUH-2	MECHANICAL	WALL MTD. BRACKET	380	17,100	1/40 H.P.	208/1/60	MODINE - HER - 50	1-3

NOTE:
1. PROVIDE LINE VOLTAGE UNIT MOUNTED THERMOSTAT.
2. WALL MOUNTING BRACKET.
3. SUMMER/WINTER SWITCH AND OVERHEAT CONTROL MOUNTER ON UNIT.

MECHANICAL EQUIPMENT SCHEDULE

AC-1

INDOOR UNIT: HEATING/COOLING, WALL MOUNTED, HORIZONTAL DISCHARGE, 320-370-425CFM, 8,000-18,000 BTUH TOTAL COOLING CAPACITY AT 95°F O.A. TEMP, 80°F D.B. & 67°F W.B., 13,000 BTUH TOTAL HEATING CAPACITY AT 17°F O.A. TEMP, 70°F D.B. & 60°F W.B., MCA=1.0, 208/230/1/60 MOTOR TO BE UL LISTED. UNIT TO BE COMPLETE WITH CLEANABLE FILTER, CONDENSATE PUMP, CHECK & EXPANSION VALVE KIT, PRE-CHARGED LINE SET, DRIP PAN AND DRAIN CONNECTION. PROVIDE WALL MOUNTED THERMOSTAT WITH NIGHT SET BACK. THERMOSTAT SHALL BE HARD WIRED TO UNIT.
UNIT DIM: 35 3/8" LENGTH X 11 5/8" HEIGHT X 9 13/16" DEPTH.
WEIGHT: 29 LBS.
SEER : 15.3
MANUFACTURER: MITSUBISHI
MODEL: PKA-A18HA4

OUTDOOR UNIT: AIR COOLED, HORIZONTAL DISCHARGE, INVERTER COMPRESSOR. UNIT TO BE MOUNTED ON ROOF. 8,000-18,000 BTUH TOTAL COOLING CAPACITY AT 95°F O.A. TEMP, 80°F D.B. & 67°F W.B., 13,000 BTUH TOTAL HEATING CAPACITY AT 17°F O.A. TEMP, 70°F D.B. & 60°F W.B., MCA=13, 208/230/1/60. UNIT TO BE COMPLETE WITH CRANKCASE HEATER, AMBIENT CONTROL KIT TO 0°F, AND ALL CONTROLS FOR AUTOMATIC OPERATION. CONTRACTOR TO PROVIDE A ROOF CURB 12" ABOVE FINISHED ROOF LEVEL.
UNIT DIM: 31 1/2" LENGTH X 23 5/8" X HEIGHT X 11 3/16" WIDTH.
WEIGHT: 91 LBS.
MANUFACTURER: MITSUBISHI
MODEL: PUZ-A18NHA4

AC-2

INDOOR UNIT: HEATING/COOLING, WALL MOUNTED, HORIZONTAL DISCHARGE, 320-370-425CFM, 8,000-18,000 BTUH TOTAL COOLING CAPACITY AT 95°F O.A. TEMP, 80°F D.B. & 67°F W.B., 13,000 BTUH TOTAL HEATING CAPACITY AT 17°F O.A. TEMP, 70°F D.B. & 60°F W.B., MCA=1.0, 208/230/1/60 MOTOR TO BE UL LISTED. UNIT TO BE COMPLETE WITH CLEANABLE FILTER, CONDENSATE PUMP, CHECK & EXPANSION VALVE KIT, PRE-CHARGED LINE SET, DRIP PAN AND DRAIN CONNECTION. PROVIDE WALL MOUNTED THERMOSTAT WITH NIGHT SET BACK. THERMOSTAT SHALL BE HARD WIRED TO UNIT.
UNIT DIM: 35 3/8" LENGTH X 11 5/8" HEIGHT X 9 13/16" DEPTH.
WEIGHT: 29 LBS.
SEER : 15.3
MANUFACTURER: MITSUBISHI
MODEL: PKA-A18HA4

OUTDOOR UNIT: AIR COOLED, HORIZONTAL DISCHARGE, INVERTER COMPRESSOR, UNIT TO BE MOUNTED ON ROOF. 8,000-18,000 BTUH TOTAL COOLING CAPACITY AT 95°F O.A. TEMP, 80°F D.B. & 67°F W.B., 13,000 BTUH TOTAL HEATING CAPACITY AT 17°F O.A. TEMP, 70°F D.B. & 60°F W.B., MCA=13, 208/230/1/60. UNIT TO BE COMPLETE WITH CRANKCASE HEATER, AMBIENT CONTROL KIT TO 0°F, AND ALL CONTROLS FOR AUTOMATIC OPERATION. CONTRACTOR TO PROVIDE A ROOF CURB 12" ABOVE FINISHED ROOF LEVEL.
UNIT DIM: 31 1/2" LENGTH X 23 5/8" X HEIGHT X 11 3/16" WIDTH.
WEIGHT: 91 LBS.
MANUFACTURER: MITSUBISHI
MODEL: PUZ-A18NHA4

FH-1

PASS THROUGH LABORATORY FUME HOOD: FIBERGLASS ENCLOSURE WITH CLEAR WINDOWS AND LIFT SASH. LED SERVICE LIGHTING AND SWITCH, ONE PRE-PLUMBED SERVICE FIXTURES (1 COLD WATER) AND VALVES AT LOWER RIGHT ON OUTSIDE OF ENCLOSURE, 1 DUPLEX GFCI ELECTRICAL RECEPTACLE ON LOWER RIGHT SIDE.

PROVIDE:
- CORROSION RESISTANT WORK SURFACE
- LEFT SIDE CUP-SINK WITH P-TRAP.
- WHITE STORAGE CABINET BASE WITH DUAL HINGED DOORS
- 4-SIDED CEILING ENCLOSURE KIT, WHITE PANELS
- SASH STOPS
-

MANUFACTURER: LABCONCO
MODEL: PROTECTOR PASS THROUGH 5'-0"
ELECTRICAL: 10 AMP @ 115/1/60
DIMENSIONS: OVERALL EXTERIOR: 5 FOOT NOMINAL WIDTH: 60" W X 59" H X 33.4" D
OVERALL INTERIOR: 5 FOOT NOMINAL WIDTH: 50.1" W X 48" H X 23.9" D

MHTN ARCHITECTS
MHTN Architects, Inc.
280 South 400 West
Suite 250
Salt Lake City, Utah 84101
Telephone (801) 595-6700
www.mhtn.com

OLSEN & PETERSON consulting engineers, inc.
14 East 2700 South, Salt Lake City, UT 84115
Phone: (801) 486-4646 Fax: (801) 467-2551

JORDAN SCHOOL DISTRICT

JORDAN LEARNING CENTER
3706 WEST 9800 SOUTH
SOUTH JORDAN, UT 84009

©2023 MHTN ARCHITECTS, INC.
Confidentiality Notice:
This document is intended for use on the Project identified herein by individuals and companies involved in the design, permitting, bidding and construction of the Project. MHTN Architects, Inc. grants limited rights to distribute and reproduce this document for this express purpose only. Distribution, printing or copying this document for purposes other than those indicated is strictly prohibited. If a digital copy of this document is received in error, please delete it.

SEAL

LICENSED PROFESSIONAL ENGINEER
#334524-2202
JAMES AUSTIN BERRETT
8/27/2024
UTAH

MHTN PROJECT NO. 2024528

Original drawing is 30 x 42. Do not scale contents of this drawing.

REVISIONS
CONTRACTOR TO VERIFY DRAWINGS IN FIELD USE REFLECT LAST REVISION DATE.

NO	DATE	DESCRIPTION

ISSUE
CONSTRUCTION DOCUMENTS
AUGUST 29, 2024

SHEET NAME
MECHANICAL SCHEDULES

SHEET NUMBER
M501

Autodesk Docs://2024528 JSD Retail Remodel/MEC/24 JSD Retail Remodel.rvt
8/27/2024 5:21:12 PM

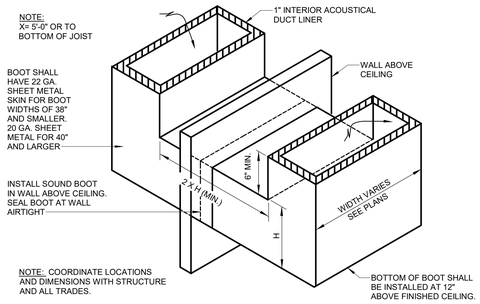

RETURN AIR SOUND BOOT DETAIL — 9 / M601

SCALE: NTS

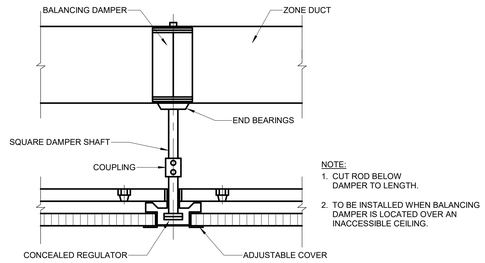

CONCEALED DAMPER OPERATOR DETAIL — 5 / M601

SCALE: NTS

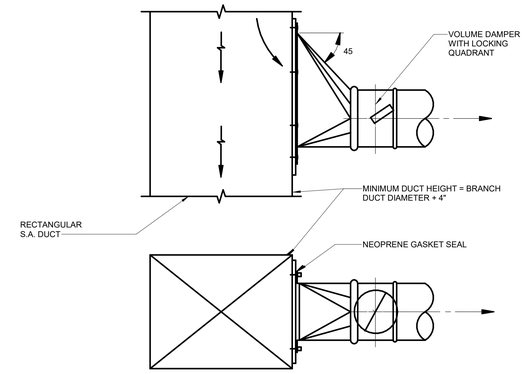

45 DEG. HIGH EFFICIENCY TAKE-OFF — 1 / M601

SCALE: NTS

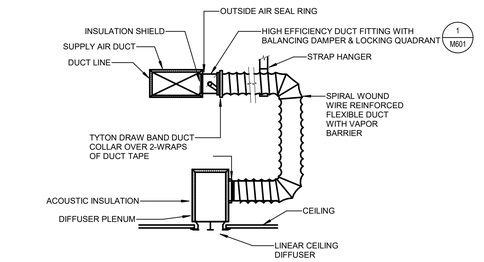

LINEAR CEILING DIFFUSER INSTALLATION DETAIL — 10 / M601

SCALE: NTS

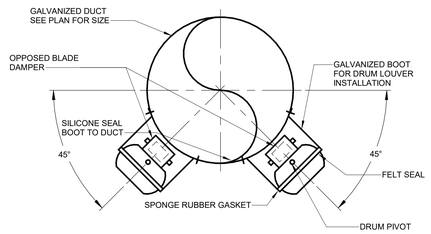

DRUM DIFFUSER INSTALLATION DATAIL — 6 / M601

SCALE: NTS

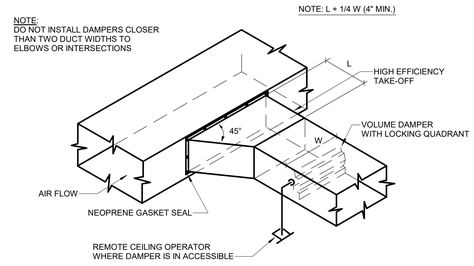

BRANCH DUCT TAKE-OFF DETAIL — 2 / M601

SCALE: NTS

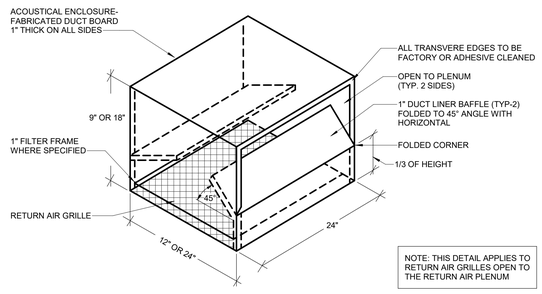

RETURN AIR BOOT DETAIL — 13 / M601

SCALE: NTS

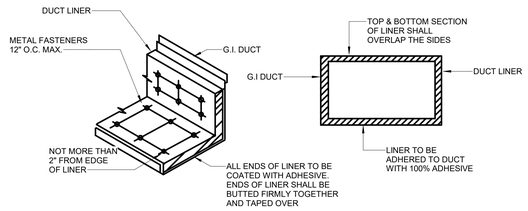

DUCT LINER DETAIL — 7 / M601

SCALE: NTS

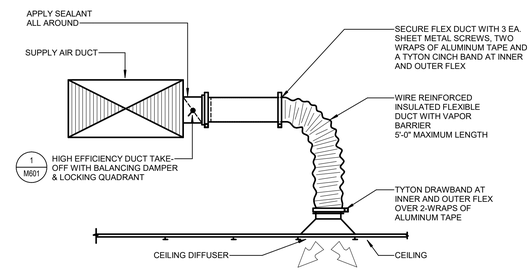

CEILING DIFFUSER DETAIL — 3 / M601

SCALE: NTS

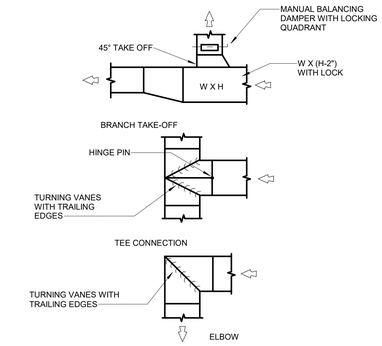

LOW PRESSURE DUCT DETAIL — 12 / M601

SCALE: NTS

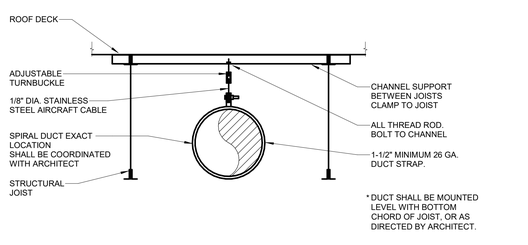

EXPOSED SPIRAL DUCT HANGER DETAIL — 8 / M601

SCALE: NTS

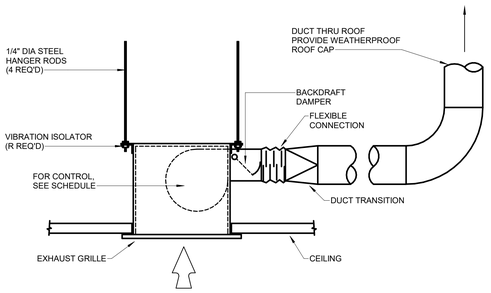

CEILING EXHAUST FAN DETAIL — 4 / M601

SCALE: NTS

MHTN ARCHITECTS
MHTN Architects, Inc.
280 South 400 West
Suite 250
Salt Lake City, Utah 84101
Telephone (801) 595-6700
www.mhtn.com

OLSEN & PETERSON
consulting engineers, inc.
14 East 2700 South, Salt Lake City, UT 84115
Phone: (801) 486-4646 Fax: (801) 467-2551

JORDAN SCHOOL DISTRICT

JORDAN LEARNING CENTER
3706 WEST 9800 SOUTH
SOUTH JORDAN, UT 84009

©2023 MHTN ARCHITECTS, INC.
Confidentiality Notice
This document is intended for use on the Project identified herein by individuals and companies involved in the design, permitting, bidding and construction of the Project. MHTN Architects, Inc. grants limited rights to distribute and reproduce this document for purposes of the Project only. Any other distribution or reproduction of this document for purposes other than those indicated is strictly prohibited. If a digital copy of this document is received in error, please delete it.

SEAL

MHTN PROJECT NO. 2024528

Original drawing is 30 x 42. Do not scale contents of this drawing.

REVISIONS
CONTRACTOR TO VERIFY DRAWINGS IN FIELD USE REFLECT LAST REVISION DATE.

NO.	DATE	DESCRIPTION

ISSUE
CONSTRUCTION DOCUMENTS
AUGUST 29, 2024

SHEET NAME
MECHANICAL DETAILS

SHEET NUMBER
M601

Autodesk Docs://2024528 -JSD Retail Remodel/MECH24 -JSD Retail Remodel.rvt
8/27/2024 5:21:14 PM

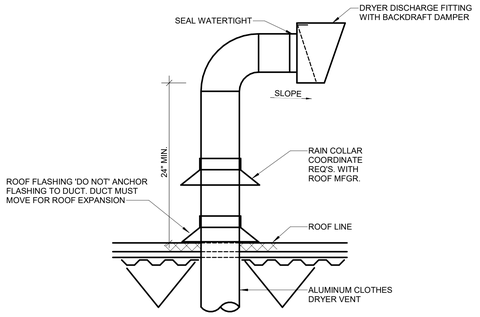

TYPICAL DRYER DUCT TERMINATION AT ROOF DETAIL

6 / M602

SCALE: NTS

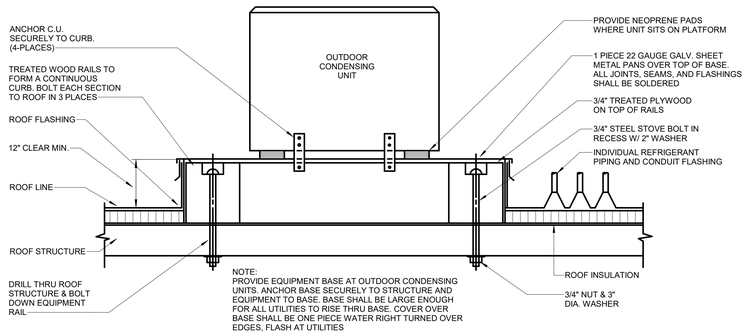

AC OUTDOOR UNIT DETAIL

8 / M602

SCALE: NTS

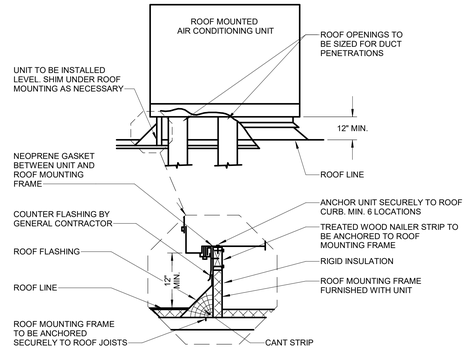

ROOF MOUNTED AIR CONDITIONING UNIT DETAIL

1 / M602

SCALE: NTS

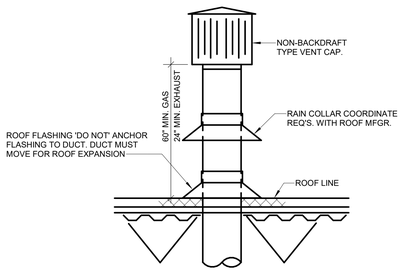

TYPICAL DUCT PENETRATION AT ROOF DETAIL

7 / M602

SCALE: NTS

STRAIGHT LATERAL

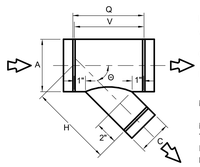

DIMENSIONS:

$V = \frac{C}{SIN\ \Theta} + 2$

$Q = \frac{C}{2 \times SIN\ \Theta} + \frac{A}{2 \times TAN\ \Theta} + 1$

$H = \frac{A}{2 \times SIN\ \Theta} + \frac{C}{2 \times TAN\ \Theta} + 2$

MAXIMUM C = A

NOTE: IF THERE ARE TWO LATERAL TAPS (C & D) BOTH TAPS WILL BE IN LINE ON ONE SIDE AND SEPARATED BY 2 INCHES (PARALLEL TO THE A CENTERLINE)

$V = \frac{C + D}{SIN\ \Theta} + 2$

MAXIMUM C OR D = A

EXPANDING STRAIGHT LATERAL

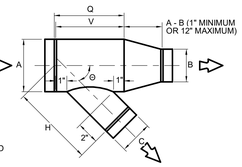

TEES & LATERALS

SQUARE TO ROUND

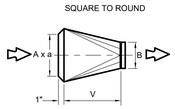

DIMENSIONS:
V = 12, 24, 36, OR 48
A = MAJOR AXIS OF RECTANGULAR SIDE
a = MINOR AXIS OF RECTANGULAR SIDE

ECCENTRIC EXPANDER

DIMENSIONS:
V = SPECIFY BODY LENGTH (4" MINIMUM)

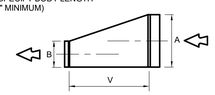

OFFSET

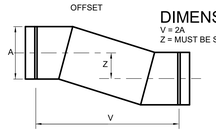

DIMENSIONS:
V = 2A
Z = MUST BE SPECIFIED

CONCENTRIC EXPANDER

DIMENSIONS:
V = SPECIFY BODY LENGTH (1" MINIMUM)

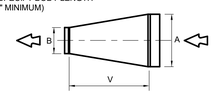

OFFSETS, REDUCERS AND EXPANDERS

MITERED 90° ELBOW

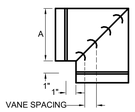

A (INCHES)	NUMBER OF VANES
3 - 9 1/2	2
10 - 12 1/2	3
13 - 19	4
20 - 60	5
OVER 60	12" MAX. SPACING

NOTE: MITERED ELBOW FITTING TO BE USED WHERE INDICATED ON CONTRACT DRAWINGS.

GORED ELBOW

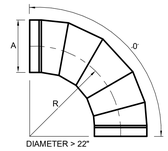

Θ ANGLE	NUMBER OF GORES
0 - 35°	2
36 - 71°	3
72 - 90°	5

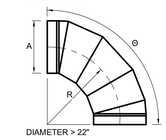

FOR ELBOWS WHERE 0EXCEEDS 90° ADD ONE GORE FOR EACH ADDITIONAL 18° OR FRACTION THEREOF.

DIMENSIONS:
R = 1.5A

ELBOW

NOTE: DUCT TAPS WILL NOT BE ALLOWED.

SPIRAL DUCT FITTING DETAILS

5 / M602

SCALE: NTS

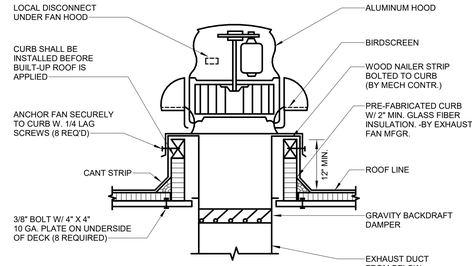

ROOF MOUNTED EXHAUST FAN DETAIL

2 / M602

SCALE: NTS

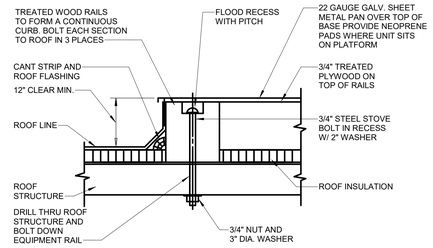

NOTE:
PROVIDE EQUIPMENT BASE AT MAKE-UP AIR UNITS IF REQUIRED. ANCHOR BASE SECURELY TO STRUCTURE AND EQUIPMENT TO BASE. BASE SHALL BE LARGE ENOUGH FOR ALL UTILITIES TO RISE THRU BASE. COVER OVER BASE SHALL BE ONE PIECE WATER TIGHT TURNED OVER EDGES, FLASH AT UTILITIES.

ROOFTOP EQUIPMENT BASE DETAIL

3 / M602

SCALE: NTS

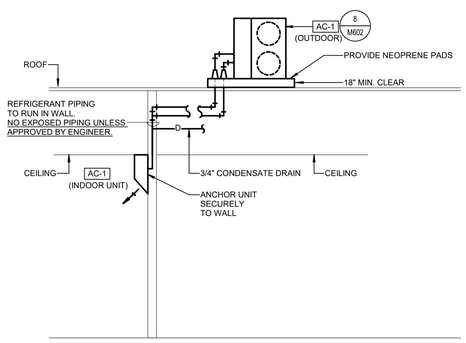

ROOM AC UNIT DETAIL

4 / M602

SCALE: NTS

MHTN ARCHITECTS
MHTN Architects, Inc.
280 South 400 West
Suite 250
Salt Lake City, Utah 84101
Telephone (801) 595-6700
www.mhtn.com

OLSEN & PETERSON
consulting engineers, inc.
14 East 2700 South, Salt Lake City, UT 84115
Phone: (801) 486-4646 Fax: (801) 467-2551

JORDAN SCHOOL DISTRICT

JORDAN LEARNING CENTER

3706 WEST 9800 SOUTH
SOUTH JORDAN, UT 84009

©2023 MHTN ARCHITECTS, INC.
Confidentiality Notice
This document is intended for use on the Project identified herein by individuals and companies involved in the design, permitting, bidding and construction of the Project. MHTN Architects, Inc. grants limited rights to distribute and reproduce this document for purposes of the Project only. Any other copying or reproduction of this document for purposes other than those indicated is strictly prohibited. If a digital copy of this document is received in error, please delete it.

SEAL

MHTN PROJECT NO. 2024528

Original drawing is 30 x 42. Do not scale contents of this drawing.

REVISIONS
CONTRACTOR TO VERIFY DRAWINGS IN FIELD USE REFLECT LAST REVISION DATE.

NO.	DATE	DESCRIPTION

ISSUE
CONSTRUCTION DOCUMENTS
AUGUST 29, 2024

SHEET NAME
MECHANICAL DETAILS

SHEET NUMBER
M602

Autodesk Docs://2024528 JSD Retail Remodel/MECH24 JSD Retail Remodel.rvt
8/27/2024 5:21:16 PM

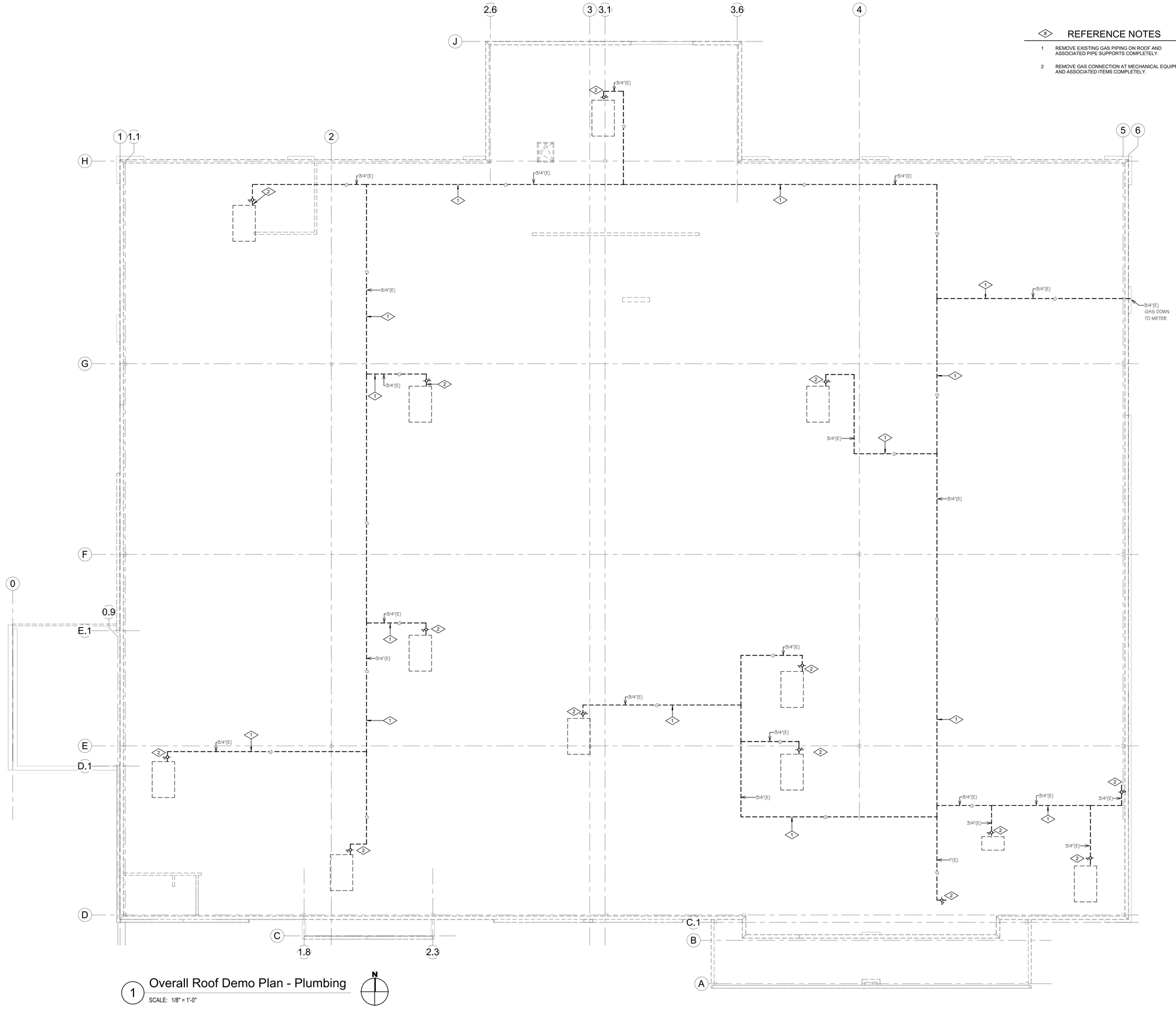

1 Overall Roof Demo Plan - Plumbing

SCALE: 1/8" = 1'-0"

N

REFERENCE NOTES

1. REMOVE EXISTING GAS PIPING ON ROOF AND ASSOCIATED PIPE SUPPORTS COMPLETELY.
2. REMOVE GAS CONNECTION AT MECHANICAL EQUIPMENT AND ASSOCIATED ITEMS COMPLETELY.

MHTN ARCHITECTS

MHTN Architects, Inc.
280 South 400 West
Suite 250
Salt Lake City, Utah 84101
Telephone (801) 595-6700
www.mhtn.com

OLSEN & PETERSON
consulting engineers, inc.
14 East 2700 South, Salt Lake City, UT 84115
Phone: (801) 486-4846 Fax: (801) 487-2531

JORDAN SCHOOL DISTRICT

JORDAN LEARNING CENTER

3706 WEST 9800 SOUTH
SOUTH JORDAN, UT 84009

©2023 MHTN ARCHITECTS, INC.

Confidentiality Notice:
This document is intended for use on the Project identified herein by individuals and companies involved in the design, permitting, bidding and construction of the Project. MHTN Architects, Inc. grants limited rights to distribute and reproduce this document for this express purpose only. Distribution, printing or copying this document for purposes other than those indicated is strictly prohibited. If a digital copy of this document is received in error, please delete it.

SEAL

LICENSED PROFESSIONAL ENGINEER
#334524-2202
JAMES AUSTIN BERRETT
8/21/2024
UTAH

MHTN PROJECT NO. 2024528

Original drawing is 30 x 42. Do not scale contents of this drawing.

REVISIONS
CONTRACTOR TO VERIFY DRAWINGS IN FIELD USE REFLECT LAST REVISION DATE.

NO.	DATE	DESCRIPTION

ISSUE
CONSTRUCTION DOCUMENTS
AUGUST 29, 2024

SHEET NAME
OVERALL ROOF DEMOLITION PLUMBING PLAN

SHEET NUMBER
PD100

Autodesk Docs://2024528 JSD Retail Remodel/MECH24 JSD Retail Remodel.rvt
8/27/2024 5:21:19 PM

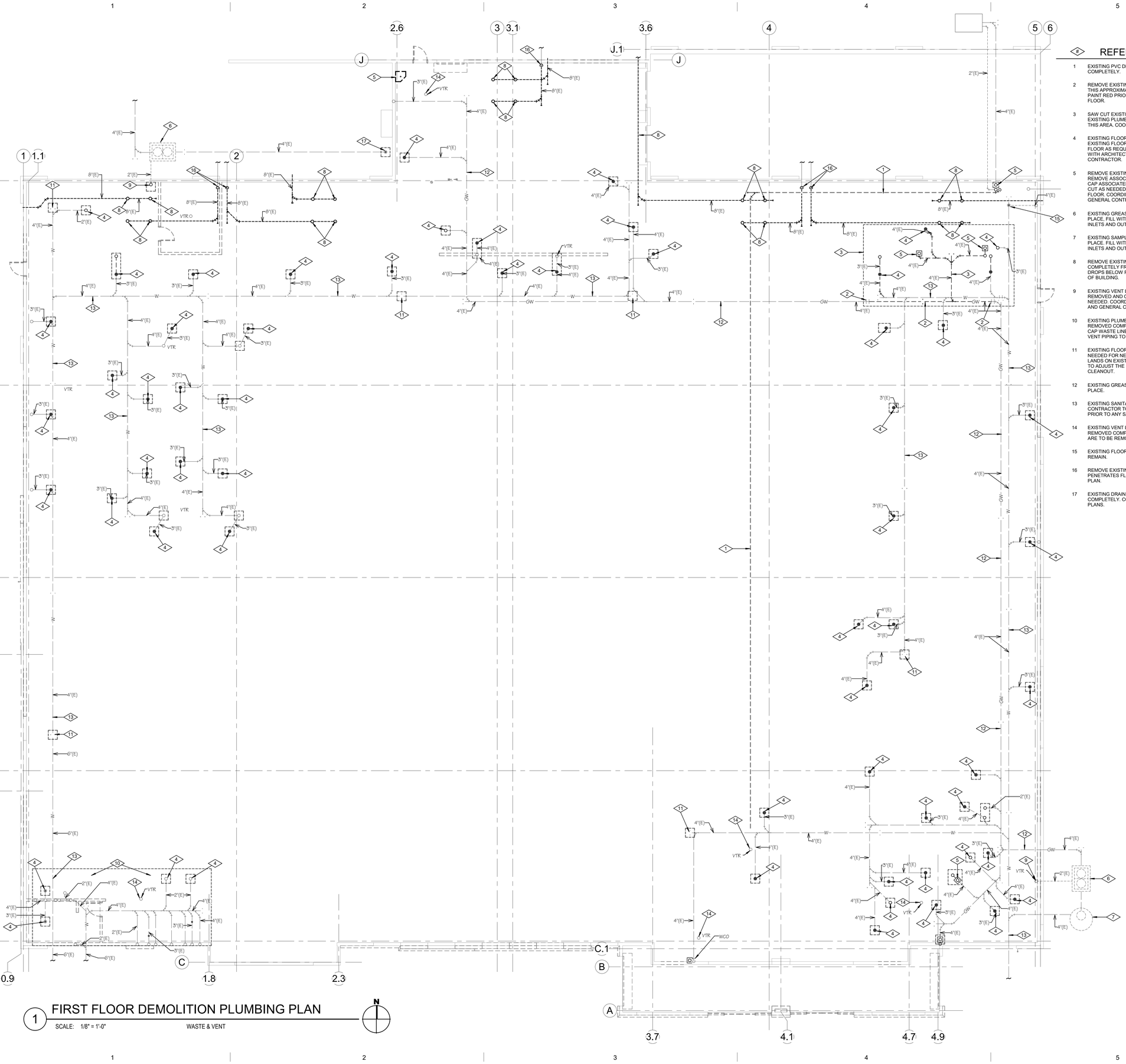

REFERENCE NOTES

#	
1	EXISTING PVC DRAIN LINE TO BE REMOVED COMPLETELY.
2	REMOVE EXISTING GREASE WASTE LINE LOCATED IN THIS APPROXIMATE LOCATION. CAP PIPING AND SPRAY PAINT RED PRIOR TO BACK FILLING AND REPAIRING FLOOR.
3	SAW CUT EXISTING FLOOR AS NEEDED FOR DEMO OF EXISTING PLUMBING FIXTURES AND FOR NEW WORK IN THIS AREA. COORDINATE WITH NEW WORK PLAN.
4	EXISTING FLOOR DRAIN TO BE REMOVED. SAW CUT EXISTING FLOOR AS NEEDED TO CAP PIPING. REPAIR FLOOR AS REQUIRED FOR NEW FLOOR. COORDINATE WITH ARCHITECTURAL PLANS AND GENERAL CONTRACTOR.
5	REMOVE EXISTING PLUMBING FIXTURES COMPLETELY. REMOVE ASSOCIATED VENT PIPING COMPLETELY AND CAP ASSOCIATED WASTE PIPING BELOW FLOOR. SAW CUT AS NEEDED AND REPAIR AS REQUIRED FOR NEW FLOOR. COORDINATE WITH ARCHITECTURAL PLANS AND GENERAL CONTRACTOR.
6	EXISTING GREASE INTERCEPTOR TO BE ABANDONED IN PLACE. FILL WITH ROAD BASE OR GRAVEL AND CAP ALL INLETS AND OUTLETS PRIOR TO FILLING.
7	EXISTING SAMPLING MANHOLE TO BE ABANDONED IN PLACE. FILL WITH ROAD BASE OR GRAVEL AND CAP ALL INLETS AND OUTLETS PRIOR TO FILLING
8	REMOVE EXISTING PVC ROOF DRAIN PIPING COMPLETELY FROM ROOF DRAINS TO WHERE PIPING DROPS BELOW FINISH FLOOR OR TERMINATES OUTSIDE OF BUILDING.
9	EXISTING VENT LINE FROM GREASE INTERCEPTOR TO BE REMOVED AND CAPPED UNDER FLOOR. SAW CUT AS NEEDED. COORDINATE WITH ARCHITECTURAL PLANS AND GENERAL CONTRACTOR
10	EXISTING PLUMBING FIXTURES IN THIS AREA ARE TO BE REMOVED COMPLETELY. SAW CUT EXISTING FLOOR AND CAP WASTE LINES BELOW FLOOR. ALL ASSOCIATED VENT PIPING TO BE REMOVED COMPLETELY
11	EXISTING FLOOR CLEANOUT TO BE ADJUSTED AS NEEDED FOR NEW FLOOR FINISHES, WHERE NEW WALL LANDS ON EXISTING FLOOR CLEANOUT CONTRACTOR IS TO ADJUST THE PIPING AS NEEDED FOR A WALL CLEANOUT.
12	EXISTING GREASE WASTE LINE TO BE ABANDONED IN PLACE.
13	EXISTING SANITARY WASTE LINE TO REMAIN IN PLACE. CONTRACTOR TO CAMERA EXISTING WASTE LINES PRIOR TO ANY SAW CUTTING OR NEW WORK IS DONE.
14	EXISTING VENT LINE THROUGH THE ROOF TO BE REMOVED COMPLETELY. ANY ASSOCIATED VENT LINES ARE TO BE REMOVED.
15	EXISTING FLOOR DRAIN AND ASSOCIATED PIPING TO REMAIN.
16	REMOVE EXISTING PVC ROOF DRAINS TO WHERE PIPING PENETRATES FLOOR. COORDINATE WITH NEW WORK PLAN.
17	EXISTING DRAIN OUTSIDE BUILDING TO BE REMOVED COMPLETELY. COORDINATE WITH ARCHITECTURAL PLANS.

1 FIRST FLOOR DEMOLITION PLUMBING PLAN

SCALE: 1/8" = 1'-0"

WASTE & VENT

N

MHTN ARCHITECTS
MHTN Architects, Inc.
280 South 400 West
Suite 250
Salt Lake City, Utah 84101
Telephone (801) 595-6700
www.mhtn.com

OLSEN & PETERSON
consulting engineers, inc.
14 East 2700 South, Salt Lake City, UT 84115
Phone: (801) 486-4646 Fax: (801) 467-2551

JORDAN SCHOOL DISTRICT

JORDAN LEARNING CENTER

3706 WEST 9800 SOUTH
SOUTH JORDAN, UT 84009

©2023 MHTN ARCHITECTS, INC.

Confidentiality Notice:
This document is intended for use on the Project identified herein by individuals and companies involved in the design, permitting, bidding and construction of the Project. MHTN Architects, Inc. grants limited rights to distribute and reproduce this document for this express purpose only. Distribution, printing or copying this document for purposes other than those indicated is strictly prohibited. If a digital copy of this document is received in error, please delete it.

SEAL

LICENSED PROFESSIONAL ENGINEER
#234824-2202
JAMES AUSTIN BERRETT
8/21/2024
UTAH

MHTN PROJECT NO. 2024528

Original drawing is 30 x 42. Do not scale contents of this drawing.

REVISIONS
CONTRACTOR TO VERIFY DRAWINGS IN FIELD USE REFLECT LAST REVISION DATE.

NO.	DATE	DESCRIPTION

ISSUE
CONSTRUCTION DOCUMENTS
AUGUST 29, 2024

SHEET NAME
OVERALL DEMOLITION PLUMBING PLAN

SHEET NUMBER
PD101

Autodesk Docs://2024528 JSD Retail Remodel/MECH24 JSD Retail Remodel.rvt
8/27/2024 5:21:24 PM

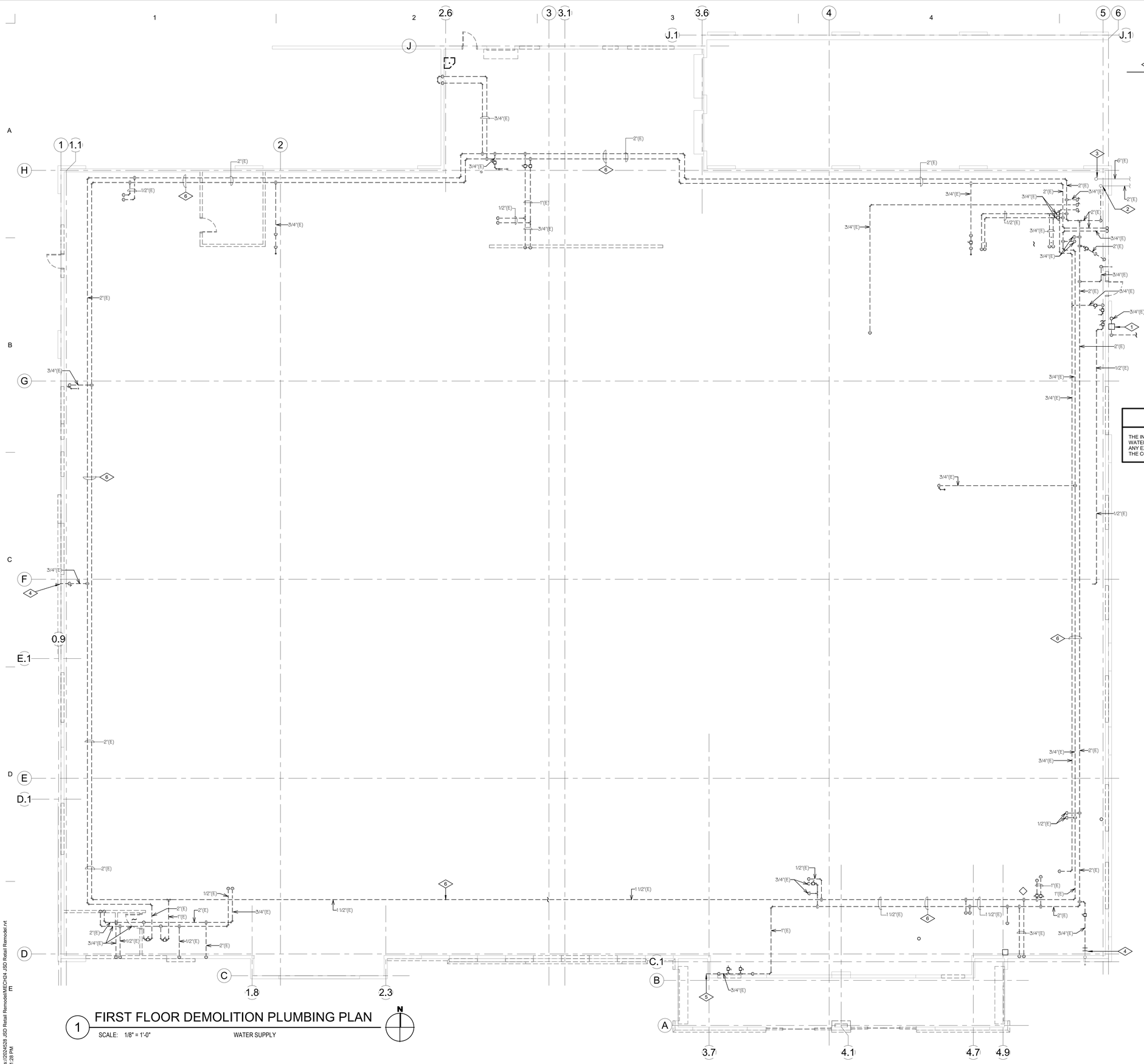

1 FIRST FLOOR DEMOLITION PLUMBING PLAN

SCALE: 1/8" = 1'-0" WATER SUPPLY

Autodesk Docs://2024528 JSD Retail Remodel/MECH24 JSD Retail Remodel.rvt
8/27/2024 5:21:28 PM

MHTN ARCHITECTS
MHTN Architects, Inc.
280 South 400 West
Suite 250
Salt Lake City, Utah 84101
Telephone (801) 595-6700
www.mhtn.com

OLSEN & PETERSON consulting engineers, inc.
14 East 2700 South, Salt Lake City, UT 84115
Phone: (801) 486-4646 Fax: (801) 487-2551

JORDAN SCHOOL DISTRICT

JORDAN LEARNING CENTER

3706 WEST 9800 SOUTH
SOUTH JORDAN, UT 84009

©2023 MHTN ARCHITECTS, INC.
Confidentiality Notice
This document is intended for use on the Project identified herein by individuals and companies involved in the design, permitting, bidding and construction of the Project. MHTN Architects, Inc. grants limited rights to distribute and reproduce this document for purposes related to the Project. Distributing or reproducing this document for purposes other than those indicated is strictly prohibited. If a digital copy of this document is received in error, please delete it.

SEAL

LICENSED PROFESSIONAL ENGINEER #334524-2202 JAMES AUSTIN BERRETT 8/27/2024 UTAH

MHTN PROJECT NO 2024528

Original drawing is 30 x 42. Do not scale contents of this drawing.

REVISIONS
CONTRACTOR TO VERIFY DRAWINGS IN FIELD USE REFLECT LAST REVISION DATE.

NO.	DATE	DESCRIPTION

ISSUE
CONSTRUCTION DOCUMENTS
AUGUST 29, 2024

SHEET NAME
OVERALL DEMOLITION PLUMBING PLAN

SHEET NUMBER
PD102

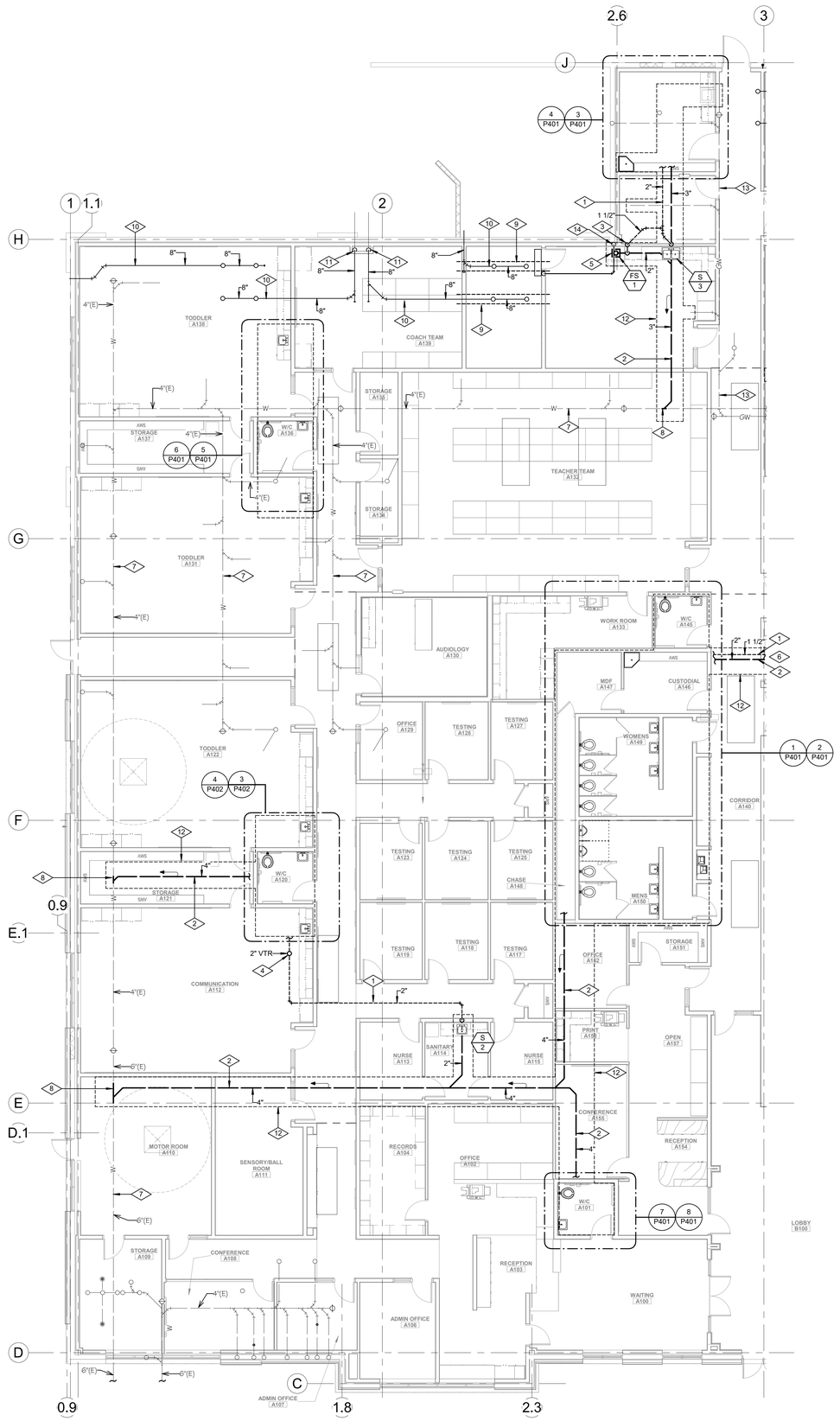

1 FIRST FLOOR PLUMBING PLAN AREA A

SCALE: 1/8" = 1'-0" WASTE & VENT

REFERENCE NOTES

#	
1	PIPING TO RUN AS HIGH AS POSSIBLE ABOVE CEILING. COORDINATE ROUTING WITH ALL TRADES (TYPICAL).
2	PIPING TO RUN BELOW FINISHED FLOOR. COORDINATE ROUTING WITH STRUCTURAL FOOTINGS (TYPICAL).
3	VENT RISE FROM BELOW FLOOR TO AS HIGH AS POSSIBLE.
4	VENT THRU ROOF (VTR). MAINTAIN A MINIMUM OF 15'-0" FROM ALL OUTSIDE AIR INTAKES. SEE DETAIL 6/P602.
5	TERMINATE ICE MAKER DRAIN INDIRECT AT FLOOR SINK LOCATED BELOW ICE MAKER.
6	FOR CONTINUATION OF PIPING SEE SHEET P101B
7	EXISTING WASTE LINE TO REMAIN.
8	TIE NEW WASTE PIPING INTO EXISTING WASTE LINE IN THIS APPROXIMATE LOCATION. CONTRACTOR TO VERIFY LOCATION OF EXISTING WASTE LINE PRIOR TO SAW CUTTING.
9	INSTALL SLOPED SHEET METAL THROUGH UNDER ROOF DRAIN ABOVE ELECTRICAL ROOM.
10	INSTALL NEW CAST IRON ROOF DRAINS. ROUTE PIPING AS SAME AS EXISTING PIPING. INSULATE PIPING PER SPECIFICATIONS.
11	TIE NEW CAST IRON ROOF DRAIN PIPING TO EXISTING PVC ROOF DRAIN PIPING LOCATED IN THIS APPROXIMATE LOCATION.
12	SAW CUT EXISTING FLOOR SLAB AS NEEDED FOR INSTALLATION OF NEW WASTE PIPING. COORDINATE WITH EXISTING CONDITIONS PRIOR TO SAW CUTTING.
13	EXISTING GREASE WASTE PIPING TO BE ABANDONED IN PLACE. NO WASTE PIPING SHALL BE TIED INTO EXISTING GREASE WASTE SYSTEM.
14	RUN CONDENSATE PIPING FROM 'AC-2' OVER TO FLOOR SINK AND PIPE INDIRECT. PIPING TO DROP INSIDE WALL.

MHTN ARCHITECTS

MHTN Architects, Inc.
280 South 400 West
Suite 250
Salt Lake City, Utah 84101
Telephone (801) 595-6700
www.mhtn.com

OLSEN & PETERSON
consulting engineers, inc.
14 East 2700 South, Salt Lake City, UT 84115
Phone: (801) 486-4646 Fax: (801) 467-2551

JORDAN SCHOOL DISTRICT

JORDAN LEARNING CENTER

3706 WEST 9800 SOUTH
SOUTH JORDAN, UT 84009

©2023 MHTN ARCHITECTS, INC.

Confidentiality Notice:
This document is intended for use on the Project identified herein by individuals and companies involved in the design, permitting, bidding and construction of the Project. MHTN Architects, Inc. grants limited rights to distribute and reproduce this document for this express purpose only. Distribution, printing or copying this document for purposes other than those indicated is strictly prohibited. If a digital copy of this document is received in error, please delete it.

SEAL

LICENSED PROFESSIONAL ENGINEER #334524-2202 JAMES AUSTIN BERRETT 8/27/2024 UTAH

MHTN PROJECT NO. 2024528

Original drawing is 30 x 42. Do not scale contents of this drawing.

REVISIONS
CONTRACTOR TO VERIFY DRAWINGS IN FIELD USE REFLECT LAST REVISION DATE.

NO.	DATE	DESCRIPTION

ISSUE
CONSTRUCTION DOCUMENTS
AUGUST 29, 2024

SHEET NAME
FIRST FLOOR PLUMBING PLAN AREA A

SHEET NUMBER
P101A

Autodesk Docs://2024528 JSD Retail Remodel/MEP/24 JSD Retail Remodel.rvt
8/27/2024 5:21:33 PM

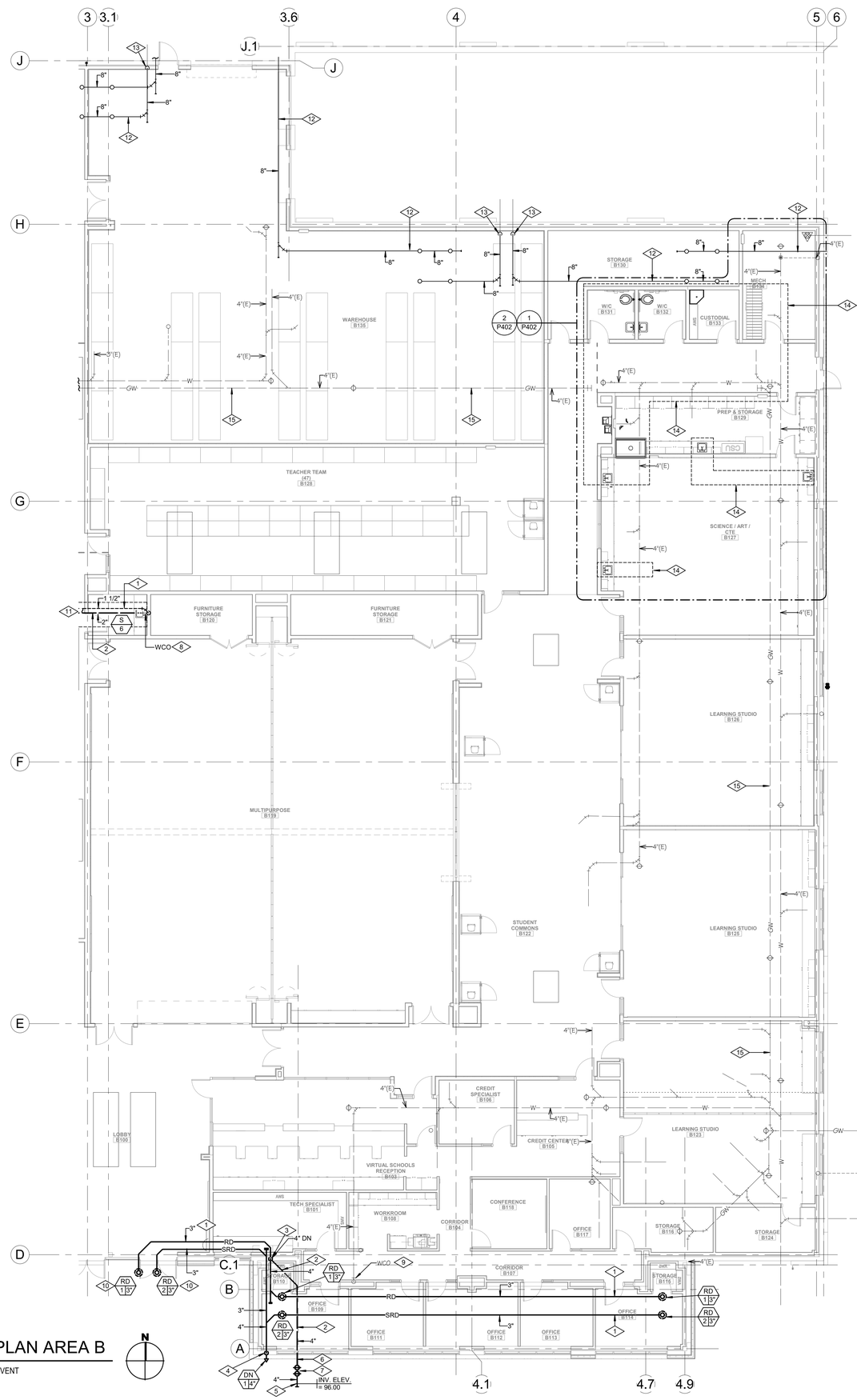

1 FIRST FLOOR PLUMBING PLAN AREA B

SCALE: 1/8" = 1'-0" WASTE & VENT

REFERENCE NOTES

#	
1	PIPING TO RUN AS HIGH AS POSSIBLE ABOVE CEILING. COORDINATE ROUTING WITH ALL TRADES (TYPICAL).
2	PIPING TO RUN BELOW FINISHED FLOOR. COORDINATE ROUTING WITH STRUCTURAL FOOTINGS (TYPICAL).
3	PRIMARY ROOF DRAIN DROP TO BELOW FINISHED FLOOR. PROVIDE CLEANOUT AT BASE, 18" ABOVE FINISHED FLOOR. COORDINATE WITH STRUCTURAL FOOTINGS AND ARCHITECTURAL CHASE LOCATIONS.
4	SECONDARY ROOF DRAIN DROP TO 18" ABOVE FINISHED GRADE OR AS REQUIRED TO LOCATE "DN" IN CENTER OF BLOCK COURSE. COORDINATE WITH ARCHITECTURAL CHASE LOCATIONS.
5	EXTEND PIPING 5'-0" BEYOND BUILDING. COORDINATE EXACT LOCATION AND INVERT ELEVATION WITH CIVIL DRAWINGS AND SITE UTILITY CONTRACTOR. PLUMBING CONTRACTOR SHALL MAKE FINAL CONNECTION TO SITE UTILITIES.
6	PIPING TO RUN BELOW FINISHED GRADE.
7	DOUBLE CLEANOUT TO GRADE (TYPICAL). SEE DETAIL 1/P602.
8	WALL CLEANOUT (WC0) (TYPICAL).
9	CONTRACTOR TO ADJUST EXISTING WALL CLEANOUT AS NEEDED IN NEW WALL.
10	INSTALL HEAT TRACE ON ROOF DRAIN PIPING FROM ROOF DRAIN BOWL TO 6'-0" INSIDE BUILDING. 120/1/60 REQUIRED. COORDINATE WITH ELECTRICAL CONTRACTOR. PLUMBING CONTRACTOR TO SUPPLY HEAT TRACE.
11	FOR CONTINUATION OF PIPING SEE SHEET M101A
12	INSTALL NEW CAST IRON ROOF DRAINS. ROUTE PIPING AS SAME AS EXISTING PIPING. INSULATE PIPING PER SPECIFICATIONS.
13	TIE NEW CAST IRON ROOF DRAIN PIPING TO EXISTING PVC ROOF DRAIN PIPING LOCATED IN THIS APPROXIMATE LOCATION.
14	SAW CUT EXISTING FLOOR SLAB AS NEEDED FOR INSTALLATION OF NEW WASTE PIPING . COORDINATE WITH EXISTING CONDITIONS PRIOR TO SAW CUTTING.
15	EXISTING GREASE WASTE PIPING TO BE ABANDONED IN PLACE. NO WASTE PIPING SHALL BE TIED INTO EXISTING GREASE WASTE SYSTEM.

MHTN ARCHITECTS

MHTN Architects, Inc.
280 South 400 West
Suite 250
Salt Lake City, Utah 84101
Telephone (801) 595-6700
www.mhtn.com

OLSEN & PETERSON
consulting engineers, inc.
14 East 2700 South, Salt Lake City, UT 84115
Phone: (801) 486-4846 Fax: (801) 487-2551

JORDAN SCHOOL DISTRICT

JORDAN LEARNING CENTER

3706 WEST 9800 SOUTH
SOUTH JORDAN, UT 84009

©2023 MHTN ARCHITECTS, INC.

Confidentiality Notice
This document is intended for use on the Project identified herein by individuals and companies involved in the design, permitting, bidding and construction of the Project. MHTN Architects, Inc. grants limited rights to distribute and reproduce this document for purposes of the Project. Any other distribution or reproduction of this document for purposes other than those indicated is strictly prohibited. If a digital copy of this document is received in error, please delete it.

SEAL

LICENSED PROFESSIONAL ENGINEER
#334524-2202
JAMES AUSTIN BERRETT
8/27/2024
UTAH

MHTN PROJECT NO 2024528

Original drawing is 30 x 42. Do not scale contents of this drawing.

REVISIONS
CONTRACTOR TO VERIFY DRAWINGS IN FIELD USE REFLECT LAST REVISION DATE.

NO.	DATE	DESCRIPTION

ISSUE
CONSTRUCTION DOCUMENTS
AUGUST 29, 2024

SHEET NAME
FIRST FLOOR PLUMBING PLAN AREA B

SHEET NUMBER
P101B

Autodesk Docs://2024528 - JSD Retail Remodel/MECH24 - JSD Retail Remodel.rvt
8/27/2024 5:21:38 PM

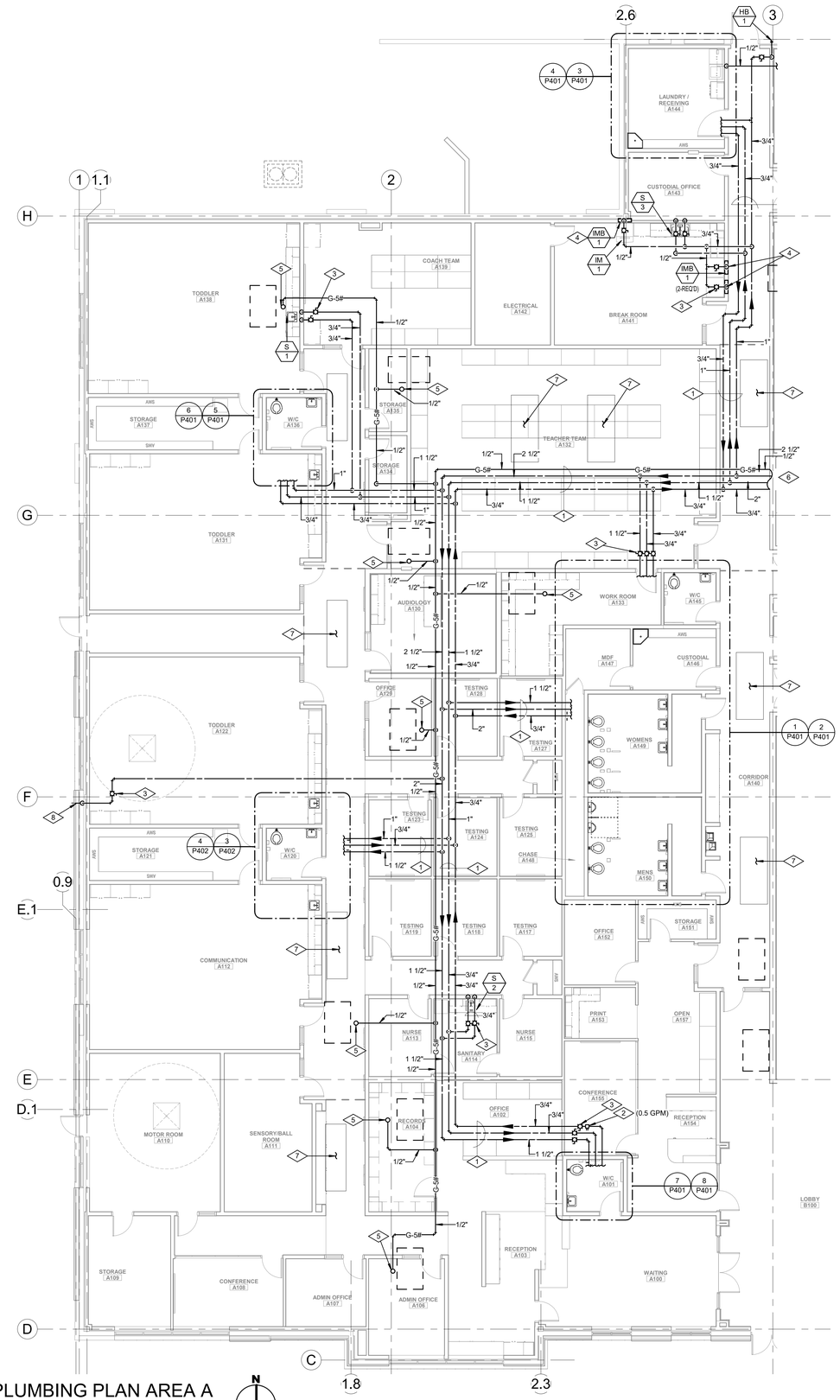

REFERENCE NOTES

#	
1	PIPING TO RUN AS HIGH AS POSSIBLE ABOVE CEILING. COORDINATE ROUTING WITH ALL TRADES (TYPICAL).
2	CALIBRATED BALANCING VALVE ON HOT WATER RECIRCULATING LINE. BALANCE FLOW TO GPM SHOWN.
3	BALL VALVE (TYPICAL). VALVE MUST BE ACCESSIBLE.
4	1/2" CW TO SERVE ICE MAKER BOX. RUN PIPING IN WALL.
5	GAS LINE UP THRU ROOF TO EQUIPMENT. PROVIDE GAS RATED BALL VALVE, DIRT LEG, TEST PORTS AND PRESSURE REGULATOR. SEE DETAIL 3/P602.
6	FOR CONTINUATION OF PIPING SEE SHEET P102B
7	SKYLIGHT. NO PIPING TO RUN IN THIS AREA. COORDINATE WITH ARCHITECTURAL PLANS.
8	CONNECT CW LINE TO EXISTING PIPING SERVING EXISTING HOSE BIBB.

1 FIRST FLOOR PLUMBING PLAN AREA A

SCALE: 1/8" = 1'-0"

WATER SUPPLY & GAS

MHTN ARCHITECTS

MHTN Architects, Inc.
280 South 400 West
Suite 250
Salt Lake City, Utah 84101
Telephone (801) 595-6700
www.mhtn.com

OLSEN & PETERSON
consulting engineers, inc.
14 East 2700 South, Salt Lake City, UT 84115
Phone: (801) 486-4646 Fax: (801) 467-2551

JORDAN SCHOOL DISTRICT

JORDAN LEARNING CENTER

3706 WEST 9800 SOUTH
SOUTH JORDAN, UT 84009

©2023 MHTN ARCHITECTS, INC.

Confidentiality Notice
This document is intended for use on the Project identified herein by individuals and companies involved in the design, permitting, bidding and construction of the Project. MHTN Architects, Inc. grants limited rights to distribute and reproduce this document for such purposes. Any other distribution, copying or reproduction of this document for purposes other than those indicated is strictly prohibited. If a digital copy of this document is received in error, please delete it.

SEAL

LICENSED PROFESSIONAL ENGINEER #334524-2202 JAMES AUSTIN BERRETT 8/27/2024 UTAH

MHTN PROJECT NO 2024528

Original drawing is 30 x 42. Do not scale contents of this drawing.

REVISIONS
CONTRACTOR TO VERIFY DRAWINGS IN FIELD USE REFLECT LAST REVISION DATE.

NO.	DATE	DESCRIPTION

ISSUE
CONSTRUCTION DOCUMENTS
AUGUST 29, 2024

SHEET NAME
FIRST FLOOR PLUMBING PLAN AREA A

SHEET NUMBER
P102A

Autodesk Docs://2024528 JSD Retail Remodel/MECH24 JSD Retail Remodel.rvt
8/27/2024 5:21:43 PM

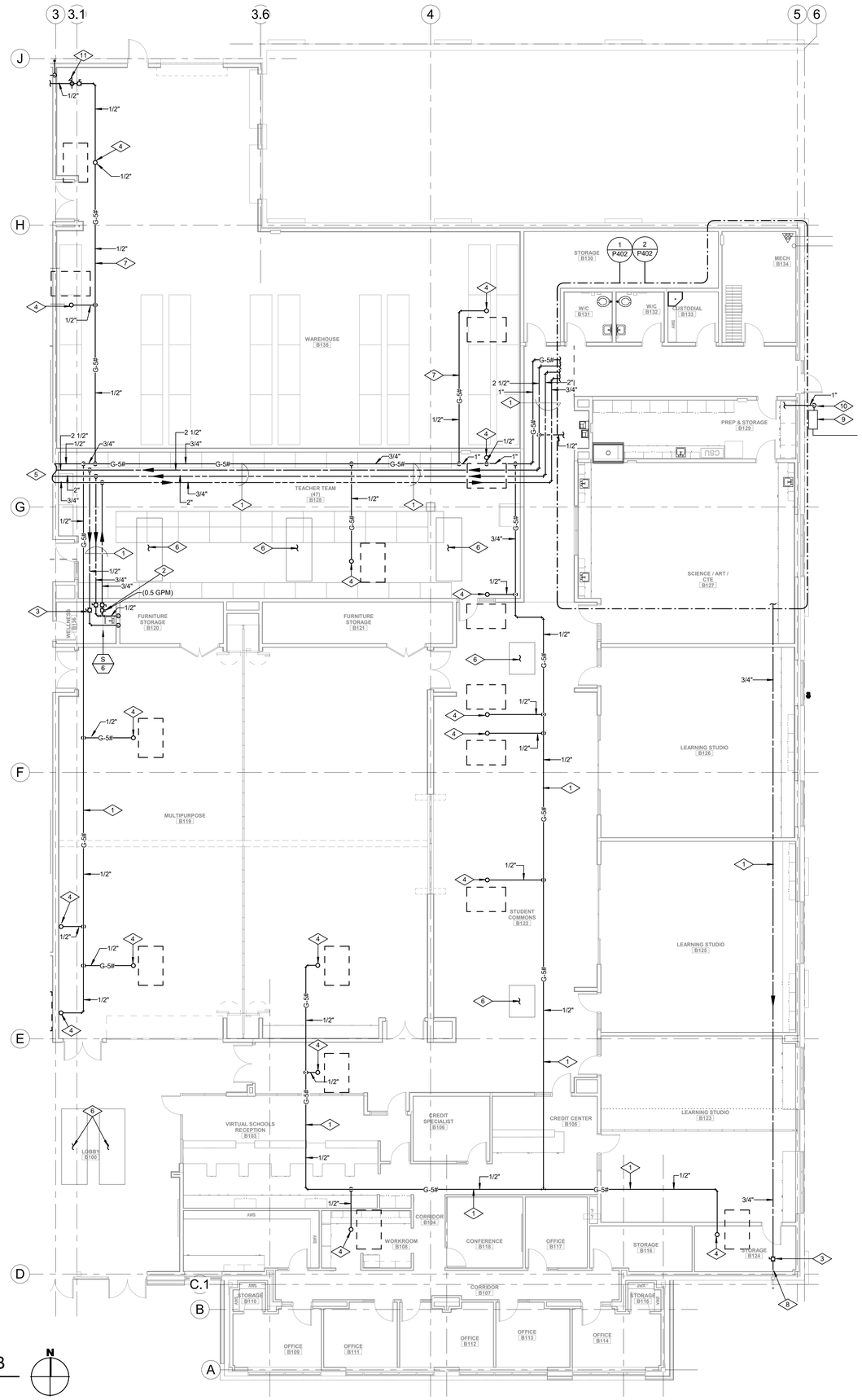

1 FIRST FLOOR PLUMBING PLAN AREA B

SCALE: 1/8" = 1'-0"

WATER SUPPLY & GAS

REFERENCE NOTES

1. PIPING TO RUN AS HIGH AS POSSIBLE ABOVE CEILING. COORDINATE ROUTING WITH ALL TRADES (TYPICAL).
2. CALIBRATED BALANCING VALVE ON HOT WATER RECIRCULATING LINE. BALANCE FLOW TO GPM SHOWN.
3. BALL VALVE (TYPICAL). VALVE MUST BE ACCESSIBLE.
4. GAS LINE UP THRU ROOF TO EQUIPMENT. PROVIDE GAS RATED BALL VALVE, DIRT LEG, TEST PORTS AND PRESSURE REGULATOR. SEE DETAIL 3/P602.
5. FOR CONTINUATION OF PIPING SEE SHEET P102A.
6. SKYLIGHT. NO PIPING TO RUN IN THIS AREA. COORDINATE WITH ARCHITECTURAL PLANS.
7. PIPING TO RUN EXPOSED AS HIGH AS POSSIBLE ABOVE CEILING. COORDINATE ROUTING WITH ALL TRADES (TYPICAL).
8. CONNECT CW LINE TO EXISTING PIPING SERVING EXISTING HOSE BIBB.
9. UPSIZE THE EXISTING 5# GAS METER AS NEED FOR NEW BUILDING GAS LOAD. COORDIANTE WITH LOCAL GAS COMPANY
10. PIPE SEISMIC GAS VALVE PER SEE DETAIL 9/P601
11. INSTALL GAS REGULATOR IN AN ACCESSIBLE LOCATION.

MHTN ARCHITECTS

MHTN Architects, Inc.
280 South 400 West
Suite 250
Salt Lake City, Utah 84101
Telephone (801) 595-6700
www.mhtn.com

OLSEN & PETERSON
consulting engineers, inc.
14 East 2700 South, Salt Lake City, UT 84115
Phone: (801) 486-4848 Fax: (801) 487-2331

JORDAN SCHOOL DISTRICT

JORDAN LEARNING CENTER

3706 WEST 9800 SOUTH
SOUTH JORDAN, UT 84009

©2023 MHTN ARCHITECTS, INC.

Confidentiality Notice:
This document is intended for use on the Project identified herein by individuals and companies involved in the design, permitting, bidding and construction of the Project. MHTN Architects, Inc. grants limited rights to distribute and reproduce this document for this express purpose only. Distribution, printing or copying this document for purposes other than those indicated is strictly prohibited. If a digital copy of this document is received in error, please delete it.

SEAL

LICENSED PROFESSIONAL ENGINEER
#334524-2202
JAMES AUSTIN BERRETT
8/21/2024
UTAH

MHTN PROJECT NO. 2024528

Original drawing is 30 x 42. Do not scale contents of this drawing.

REVISIONS
CONTRACTOR TO VERIFY DRAWINGS IN FIELD USE REFLECT LAST REVISION DATE.

NO.	DATE	DESCRIPTION

ISSUE
CONSTRUCTION DOCUMENTS
AUGUST 29, 2024

SHEET NAME
FIRST FLOOR PLUMBING PLAN AREA B

SHEET NUMBER
P102B

Autodesk Docs://2024528 JSD Retail Remodel/MECH24 JSD Retail Remodel.rvt
8/27/2024 5:21:47 PM

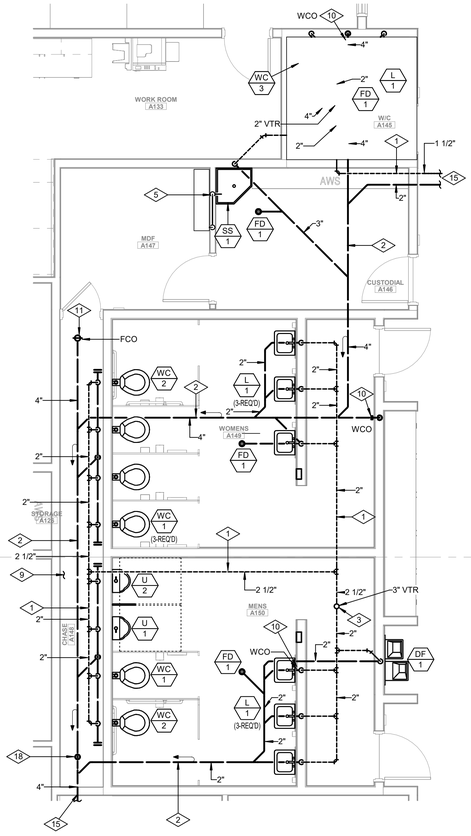

1 ENLARGED PLUMBING PLAN AREA A

SCALE: 1/4" = 1'-0" WASTE & VENT

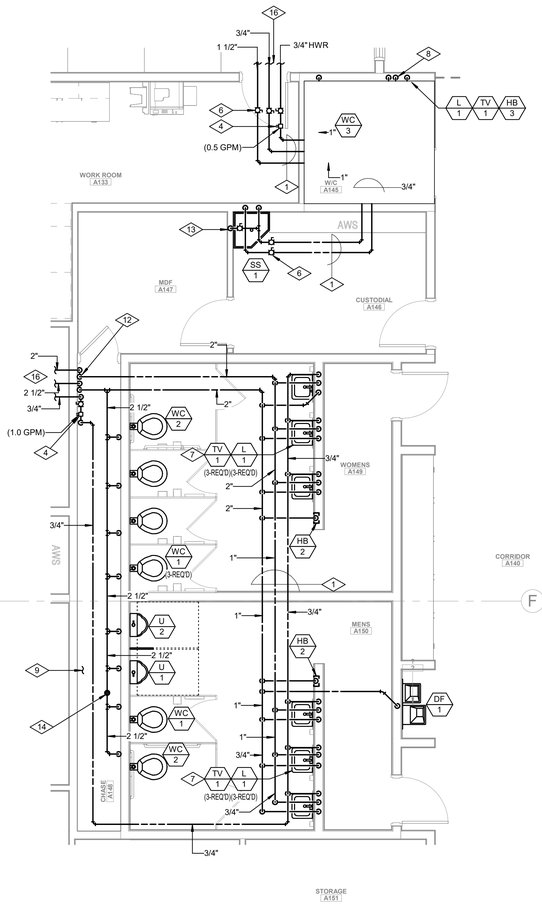

2 ENLARGED PLUMBING PLAN AREA A

SCALE: 1/4" = 1'-0" WATER SUPPLY

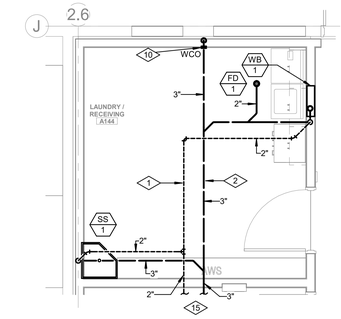

3 ENLARGED PLUMBING PLAN W&V AREA A

SCALE: 1/4" = 1'-0" WASTE & VENT

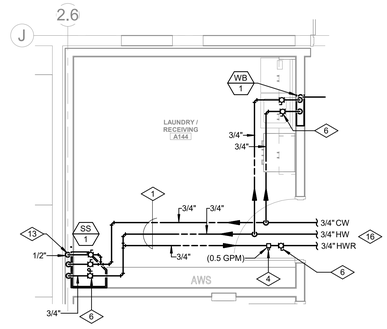

4 ENLARGED PLUMBING PLAN AREA A

SCALE: 1/4" = 1'-0" WATER SUPPLY

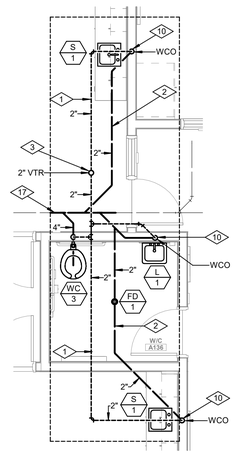

5 ENLARGED PLUMBING PLAN AREA A

SCALE: 1/4" = 1'-0" WASTE & VENT

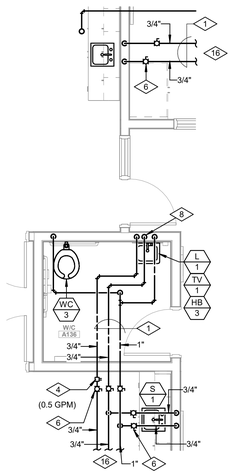

6 ENLARGED PLUMBING PLAN AREA A

SCALE: 1/4" = 1'-0" WATER SUPPLY

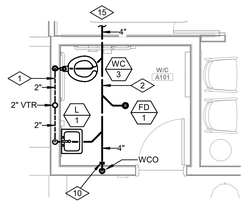

7 ENLARGED PLUMBING PLAN AREA A

SCALE: 1/4" = 1'-0" WASTE & VENT

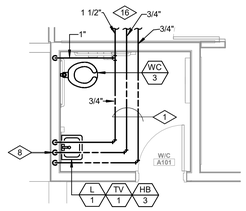

8 ENLARGED PLUMBING PLAN AREA A

SCALE: 1/4" = 1'-0" WATER SUPPLY

REFERENCE NOTES

#	
1	PIPING TO RUN AS HIGH AS POSSIBLE ABOVE CEILING. COORDINATE ROUTING WITH ALL TRADES (TYPICAL).
2	PIPING TO RUN BELOW FINISHED FLOOR. COORDINATE ROUTING WITH STRUCTURAL FOOTINGS (TYPICAL).
3	VENT THRU ROOF (VTR). MAINTAIN A MINIMUM OF 15'-0" FROM ALL OUTSIDE AIR INTKES. SEE DETAIL 8/P602.
4	CALIBRATED BALANCING VALVE ON HOT WATER RECIRCULATING LINE. BALANCE FLOW TO GPM SHOWN.
5	3/4" CONDENSATE DRAIN LINE FROM AC-1. TERMINATE DRAIN INDIRECT AT SERVICE SINK.
6	BALL VALVE (TYPICAL). VALVE MUST BE ACCESSIBLE.
7	1/2" HOT, COLD AND HOT WATER RECIRCULATING PIPING TO DROP IN WALL TO SERVE LAVATORY (TYPICAL).
8	3/4" COLD, 1/2" HOT AND HOT WATER RECIRCULATING PIPING TO DROP IN WALL TO SERVE LAVATORY (TYPICAL).
9	ALL HORIZONTAL PIPING RUN IN PLUMBING CHASE SHALL BE INSTALLED 7'-0" MINIMUM ABOVE FINISHED FLOOR.
10	WALL CLEANOUT (WCO) (TYPICAL). SEE DETAIL 4/P602.
11	FLOOR CLEANOUT (FCO) (TYPICAL). SEE DETAIL 4/P601.
12	LINE SIZE BALL VALVE IN VERTICAL PIPE DROP. VALVES MUST BE ACCESSIBLE. MOUNT VALVES AT 6'-6" ABOVE FINISHED FLOOR.
13	PROVIDE 1/2" CW LINE TO HOSE BIBB 'HB-4' SEE DETAIL 1/P603.
14	WATER HAMMER ARRESTOR (TYPICAL).
15	FOR CONTINUATION OF PIPING SEE SHEET P101A.
16	FOR CONTINUATION OF PIPING SEE SHEET P102A.
17	CONTRACTOR TO TIE INTO EXISTING PIPING IN THIS APPROXIMATE LOCATION. CONTRACTOR TO REMOVE AS NEEDED PIPING TO MAKE ALL NEW CONNECTIONS.
18	4" WASTE PIPIE STUB UP WITH JIM CAP.

MHTN ARCHITECTS

MHTN Architects, Inc.
280 South 400 West
Suite 250
Salt Lake City, Utah 84101
Telephone (801) 595-6700
www.mhtn.com

OLSEN & PETERSON
consulting engineers, inc.
14 East 2700 South, Salt Lake City, UT 84115
Phone: (801) 486-4646 Fax: (801) 467-2551

JORDAN SCHOOL DISTRICT

JORDAN LEARNING CENTER

3706 WEST 9800 SOUTH
SOUTH JORDAN, UT 84009

©2023 MHTN ARCHITECTS, INC.

Confidentiality Notice:
This document is intended for use on the Project identified herein by individuals and companies involved in the design, permitting, bidding and construction of the Project. MHTN Architects, Inc. grants limited rights to distribute and reproduce this document for this express purpose only. Distribution, printing or copying this document for purposes other than those indicated is strictly prohibited. If a digital copy of this document is received in error, please delete it.

SEAL

LICENSED PROFESSIONAL ENGINEER #334524-2202 JAMES AUSTIN BERRETT 8/21/2024 UTAH

MHTN PROJECT NO. 2024528

Original drawing is 30 x 42. Do not scale contents of this drawing.

REVISIONS
CONTRACTOR TO VERIFY DRAWINGS IN FIELD. USE REFLECT LAST REVISION DATE.

NO	DATE	DESCRIPTION

ISSUE
CONSTRUCTION DOCUMENTS
AUGUST 29, 2024

SHEET NAME
ENLARGED PLUMBING PLANS

SHEET NUMBER
P401

Autodesk Docs://2024528 JSD Retail Remodel/MEC24-24 JSD Retail Remodel.rvt
8/27/2024 5:21:54 PM

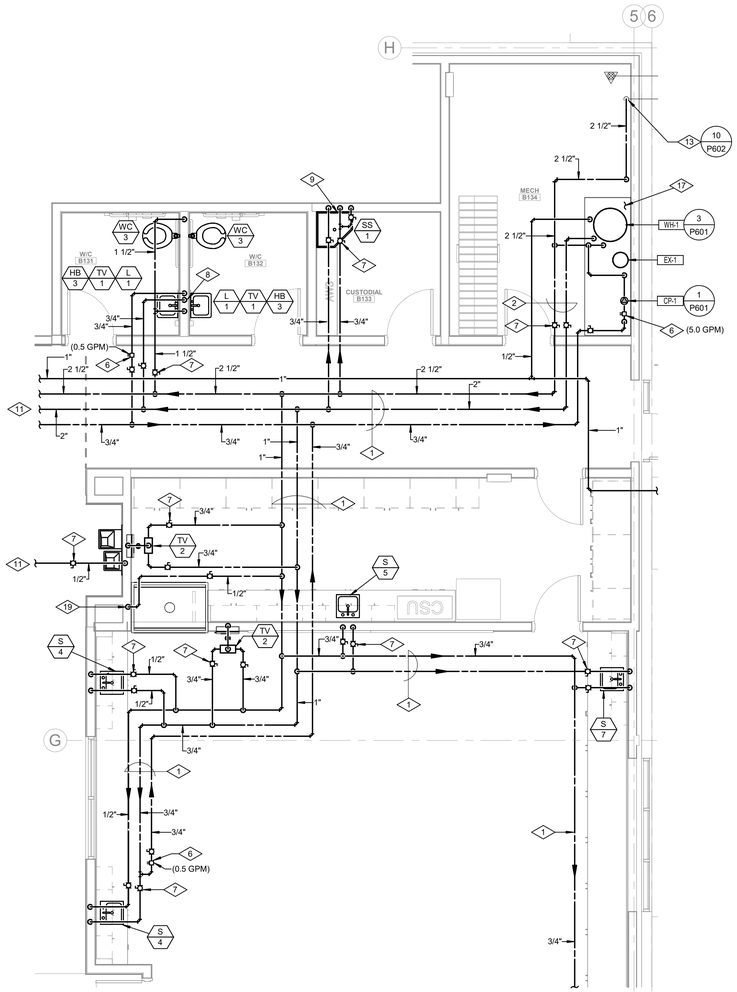

1 ENLARGED PLUMBING PLAN AREA B

SCALE: 1/4" = 1'-0" WATER SUPPLY

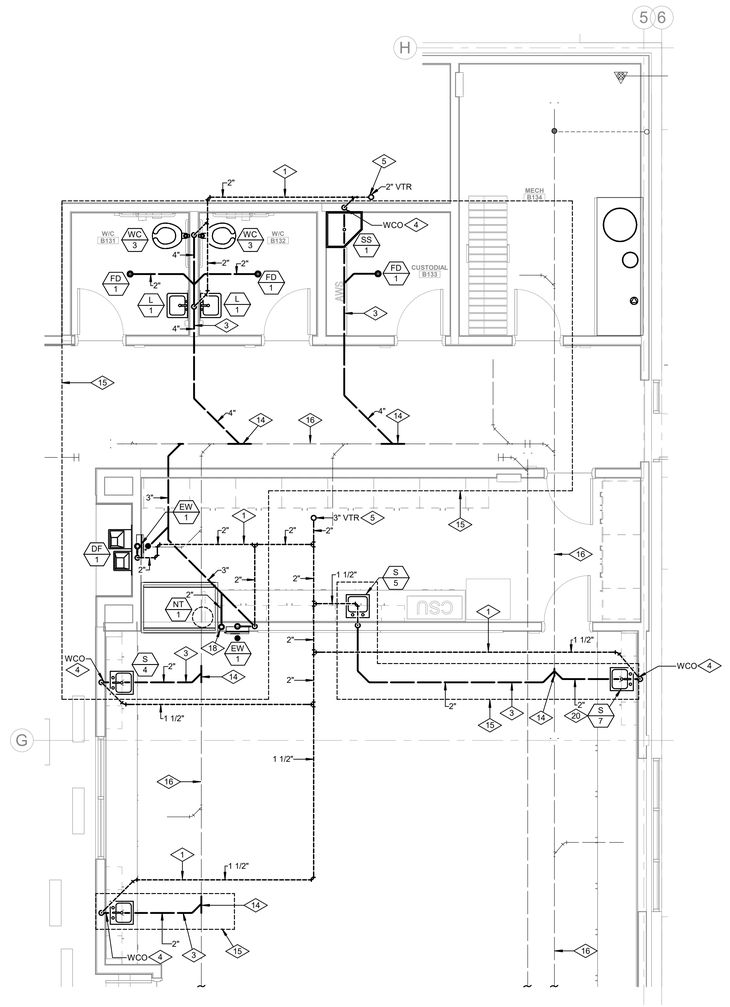

2 ENLARGED PLUMBING PLAN AREA B

SCALE: 1/4" = 1'-0" WASTE & VENT

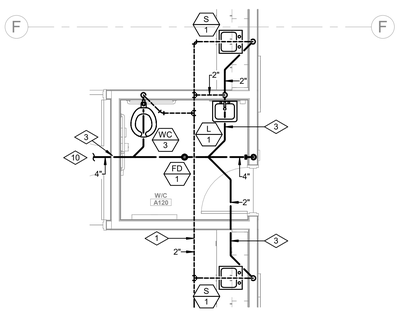

3 ENLARGED PLUMBING PLAN AREA A

SCALE: 1/4" = 1'-0" WASTE & VENT

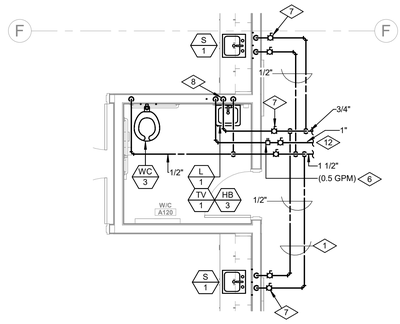

4 ENLARGED PLUMBING PLAN AREA A

SCALE: 1/4" = 1'-0" WATER SUPPLY

REFERENCE NOTES

1. PIPING TO RUN AS HIGH AS POSSIBLE ABOVE CEILING. COORDINATE ROUTING WITH ALL TRADES (TYPICAL).
2. PIPING TO RUN EXPOSED AS HIGH AS POSSIBLE. COORDINATE ROUTING WITH ALL TRADES (TYPICAL).
3. PIPING TO RUN BELOW FINISHED FLOOR. COORDINATE ROUTING WITH STRUCTURAL FOOTINGS (TYPICAL).
4. WALL CLEANOUT (WC0) (TYPCIAL).
5. VENT THRU ROOF (VTR). MAINTAIN A MINIMUM OF 15'-0" FROM ALL OUTSIDE AIR INTKES. SEE DETAIL 6/P602.
6. CALIBRATED BALANCING VALVE ON HOT WATER RECIRCULATING LINE. BALANCE FLOW TO GPM SHOWN.
7. BALL VALVE (TYPICAL). VALVE MUST BE ACCESSIBLE.
8. 3/4" COLD, 1/2" HOT AND HOT WATER RECIRCULATING PIPING TO DROP IN WALL TO SERVE LAVATORY (TYPICAL).
9. PROVIDE 1/2" CW LINE TO HOSE BIBB 'HB-4' SEE DETAIL 1/P603.
10. FOR CONTINUATION OF PIPING SEE SHEET P101A.
11. FOR CONTINUATION OF PIPING SEE SHEET P102B.
12. FOR CONTINUATION OF PIPING SEE SHEET P102A.
13. CONNECT NEW 2 1/2" WATER LINE TO EXISTING. SEE DETAIL 10/P602 FOR INSTALLATION OF NEW PRV.
14. TIE NEW WASTE LINE TO EXISTING WASTE LINE LOCATED IN THIS APPROXIMATE LOCATION. CONTRACTOR TO VERIFY LOCATION OF EXITING WASTE LINE PRIOR TO ANY WORK.
15. CONTRACTOR TO SAW CUT EXISTING FLOOR SLAB FOR INSTALLATION OF NEW PLUMBING WSTE LINES. CONTRACTOR TO VERIFY LOCATION OF EXISTING WASTE LINE PRIOR TO CUTTING.
16. EXISTING WASTE LINE.
17. INSTALL WATER HEATER ON 4" HOUSEKEEPING PAD.
18. PIPE NEUTRALIZATION TANK TO CUP SINK LOCATED IN FUME HOOD "FH-1". LOCATE "NT-1" IN CABINET.
19. TIE CW LINE INTO FUME HOOD "FH-1". COORDINATE LOCATIN OF TIE IN WITH FUME HOOD.
20. INSTALL SOLIDS INTERCEPTOR FROM ADA SINK IN ADJACENT CABINET.

MHTN ARCHITECTS
MHTN Architects, Inc.
280 South 400 West
Suite 250
Salt Lake City, Utah 84101
Telephone (801) 595-6700
www.mhtn.com

OLSEN & PETERSON consulting engineers, inc.
14 East 2700 South, Salt Lake City, UT 84115
Phone: (801) 486-4646 Fax: (801) 467-2551

JORDAN SCHOOL DISTRICT

JORDAN LEARNING CENTER

3706 WEST 9800 SOUTH
SOUTH JORDAN, UT 84009

©2023 MHTN ARCHITECTS, INC.

Confidentiality Notice
This document is intended for use on the Project identified herein by individuals and companies involved in the design, permitting, bidding and construction of the Project. MHTN Architects, Inc. grants limited rights to distribute and reproduce this document for such purposes. Any other distribution, use or reproduction of this document for purposes other than those indicated is strictly prohibited. If a digital copy of this document is received in error, please delete it.

SEAL

LICENSED PROFESSIONAL ENGINEER #334524-2202 JAMES AUSTIN BERRETT 8/21/2024 UTAH

MHTN PROJECT NO. 2024528

Original drawing is 30 x 42. Do not scale contents of this drawing.

REVISIONS
CONTRACTOR TO VERIFY DRAWINGS IN FIELD USE REFLECT LAST REVISION DATE.

NO.	DATE	DESCRIPTION

ISSUE
CONSTRUCTION DOCUMENTS
AUGUST 29, 2024

SHEET NAME
ENLARGED PLUMBING PLANS

SHEET NUMBER
P402

Autodesk Docs://2024528 JSD Retail Remodel/MECH24 JSD Retail Remodel.rvt
8/27/2024 5:22:00 PM

PLUMBING FIXTURE SCHEDULE

SYMBOL	FIXTURE	WASTE	VENT	C.W.	H.W.	TEMP. W.	NOTES (1)
WC 1	WATER CLOSET	4"	2"	1"	--	--	WALL MOUNTED - FLUSH VALVE
WC 2	WATER CLOSET	4"	2"	1"	--	--	WALL MOUNTED - FLUSH VALVE (ADA)
WC 3	WATER CLOSET	4"	2"	1"	--	--	FLOOR MOUNTED - FLUSH VALVE (ADA)
U 1	URINAL	3"	2"	1"	--	--	WALL MOUNTED - SENSOR FLUSH
U 2	URINAL	3"	2"	1"	--	--	WALL MOUNTED - SENSOR FLUSH (ADA)
L 1	LAVATORY	1-1/2"	1-1/2"	1/2"	1/2"	1/2"	WALL MOUNTED - (ADA) W/ASSE TV-1
S 1	SINK	1-1/2"	1-1/2"	1/2"	1/2"	--	COUNTER MOUNTED
S 2	SINK	1-1/2"	1-1/2"	1/2"	1/2"	--	COUNTER MOUNTED
S 3	SINK	1-1/2"	1-1/2"	1/2"	1/2"	--	2-COMPARTMENT COUNTER MOUNTED
S 4	SINK	1-1/2"	1-1/2"	1/2"	1/2"	--	COUNTER MOUNTED
S 5	SINK	1-1/2"	1-1/2"	1/2"	1/2"	--	COUNTER MOUNTED
S 6	SINK	1-1/2"	1-1/2"	1/2"	1/2"	--	COUNTER MOUNTED
SS 1	SERVICE SINK	3"	2"	3/4"	3/4"	--	FLOOR MOUNTED
DF 1	DRINKING FOUNTAIN	1-1/2"	1-1/2"	1/2"	--	--	SINGLE WALL MOUNTED WITH BOTTLE FILLER 120/1/60
WB 1	WASHER BOX	2"	2"	3/4"	3/4"	--	SEE DETAIL 9/P602
IMB 1	ICE MAKER BOX	--	--	1/2"	--	--	RECESSED IN WALL
HB 1	HOSE BIBB	--	--	3/4"	--	--	EXTERIOR NON-FREEZE
HB 2	HOSE BIBB	--	--	3/4"	--	--	INTERIOR WALL BOX (TOILET ROOMS)
HB 3	HOSE BIBB	--	--	3/4"	--	--	INTERIOR W/INTEGRAL VACUUM BREAKER (TOILET ROOMS)
HB 4	HOSE BIBB	--	--	3/4"	--	--	SEE DETAIL 1/P603
TV 1	TEMPERING VALVE	--	--	1/2"	1/2"	1/2"	SINGLE LAV. ASSE 1070 MOUNT UNDER LAVATORY
TV 2	TEMPERING VALVE	--	--	3/4"	3/4"	3/4"	TEMPERING VALVE AT EYEWASH STATION
FD 1	FLOOR DRAIN	2"	1-1/2"	--	--	--	W/DEEP SEAL TRAP AND ASSE TRAP GUARD
FS 1	FLOOR SINK	2"	2"	--	--	--	PROVIDE GRATE
EW 1	RECESSED EYEWASH	2"	1-1/2"	--	--	--	PROVIDE GRATE
NT 1	NEUTRALIZATION CARTRIDGE	2"	1-1/2"	--	--	--	PROVIDE @ CUP SINK IN FUME HOOD
RD 1 #"	PRIMARY ROOF DRAIN	--	--	--	--	--	SEE PLAN FOR SIZES
RD 2 #"	SECONDARY ROOF DRAIN	--	--	--	--	--	SEE PLAN FOR SIZES
DN 1 #"	DOWNSPOUT NOZZLE	--	--	--	--	--	SEE PLAN FOR SIZES

NOTES:
(1) CONTRACTOR SHALL VERIFY EXACT LOCATION OF ALL PLUMBING FIXTURES AND DRAINS WITH ARCHITECTURAL DRAWINGS PRIOR TO ROUGH-IN OR INSTALLATION.

BRANCH WATER LINE SCHEDULE

FIXTURE	FIXTURE UNITS	TOTAL QUANTITY OF FIXTURES SERVED BY A GIVEN PIPE SIZE					
		1/2"	3/4"	1"	1 1/4"	1-1/2"	2"
WATER CLOSET	10	--	--	1	2	3	8
URINAL	5	--	1	2	3	6	20
LAVATORY	2	1	3	5	7	15	50
SINK	2	1	3	5	7	15	50
KITCHEN SINK	2	1	3	5	7	15	50
SERVICE SINK	4	--	1	2	3	7	25
DRINKING FOUNTAIN	1	2	6	10	15	30	--
HOSE BIBB	3	--	1	3	5	10	33
WALL HYDRANT	3	--	1	3	5	10	33
DISHWASHER	4	--	1	2	3	7	25
TOTAL FIXTURE UNITS SERVED BY PIPE SIZE		2	6	10	15	30	100

NOTE:
MINIMUM PIPE SIZE TO ANY FIXTURE TO BE 1/2". WHERE PIPE SIZE IS SHOWN ON DRAWINGS, IT SHALL BE FOLLOWED. IN THE EVENT PIPE SIZES ARE NOT SHOWN, THE SIZE OF ANY BRANCH LINE SHALL BE DETERMINED BY USING THIS TABLE. FIND SUM OF TOTAL FIXTURE UNITS ON BRANCH LINE, THEN REDUCE TOTAL BY SUBTRACTING OFF INDIVIDUAL FIXTURE UNITS FOR EACH SUCCESSIVE FIXTURE ALONG THE BRANCH LINE.

PLUMBING EQUIPMENT SCHEDULE

WH-1 WATER HEATER: GAS FIRED, PACKAGED TYPE, 100,000 BTUH INPUT, 129 GALLONS PER HOUR RECOVERY THRU 90°F TEMP. RISE. HEATER SHALL BE 75 GALLON, FACTORY INSULATED HOT WATER ASME STORAGE TANK WITH GLASS LINED TANK, POWER BURNER. HEATER SHALL BE SUITABLE FOR PVC VENTING, COMPLETE WITH P & T RELIEF VALVE. GAS TRAIN, FACTORY WIRED AND TESTED. UPPER & LOWER LIMIT OPERATING THERMOSTATS, COMBINATION HIGH AND LOW PRESSURE SAFETY CONTROLS, LOW WATER CUT-OFF, & ALL CONTROLS FOR AUTOMATIC OPERATION. SET AT 120°F.

MANUFACTURER: RHEEM
MODEL: GHE75SU-100 (96% EFFICIENT)
ELECTRICAL: 110/1/60, 7.5 MAX BREAKER AMP DRAW
DIMENSION: 26-1/4" DIAMETER X 62-1/4" H

EX-1 EXPANSION TANK (DOMESTIC): OUTER STEEL SHELL, PRE-CHARGED AIR CHAMBER - FACTORY CHARGED TO 55 PSI. 0.9 GALLONS ACCEPTANCE VOLUME. 2.1 GALLONS TOTAL VOLUME.
MANUFACTURER: AMTROL
MODEL: ST-5
SIZE: 10.25"Ø x 9.25"H
OPERATING WEIGHT: 30 LBS

CP-1 PUMP: IN-LINE RECIRCULATING, 120°F. WATER, 5 GPM AT 12 FT. HEAD, 1/6 H.P., 120/1/60, 1725 RPM, 3/4" CONNECTIONS. ALL BRONZE CONSTRUCTION.
MANUFACTURER: TACO
MODEL: SMART PLUS

PLUMBING LEGEND

WASTE - UNDERGROUND
VENT
ACID WASTE
ACID VENT
DOMESTIC COLD WATER
DOMESTIC HOT WATER
DOMESTIC HOT WATER RECIRC
GAS - 4oz
GAS - 2#
GAS - 5#

MHTN ARCHITECTS
MHTN Architects, Inc.
280 South 400 West
Suite 250
Salt Lake City, Utah 84101
Telephone (801) 595-6700
www.mhtn.com

OLSEN & PETERSON
consulting engineers, inc.
14 East 2700 South, Salt Lake City, UT 84115
Phone: (801) 486-4646 Fax: (801) 467-2551

JORDAN SCHOOL DISTRICT

JORDAN LEARNING CENTER
3706 WEST 9800 SOUTH
SOUTH JORDAN, UT 84009

©2023 MHTN ARCHITECTS, INC.
Confidentiality Notice
This document is intended for use on the Project identified herein by individuals and companies involved in the design, permitting, bidding and construction of the Project. MHTN Architects, Inc. grants limited rights to distribute and reproduce this document for such purposes only. Any other distribution, sharing or reproduction of this document for purposes other than those indicated is strictly prohibited. If a digital copy of this document is received in error, please delete it.

SEAL

LICENSED PROFESSIONAL ENGINEER
#334524-2202
JAMES AUSTIN BERRETT
8/27/2024
UTAH

MHTN PROJECT NO. 2024528

Original drawing is 30 x 42. Do not scale contents of this drawing.

REVISIONS
CONTRACTOR TO VERIFY DRAWINGS IN FIELD USE REFLECT LAST REVISION DATE.

NO.	DATE	DESCRIPTION

ISSUE
CONSTRUCTION DOCUMENTS
AUGUST 29, 2024

SHEET NAME
PLUMBING SCHEDULES & LEGENDS

SHEET NUMBER
P501

Autodesk Docs://2024528 JSD Retail Remodel/MECH24 JSD Retail Remodel.rvt
8/27/2024 5:22:01 PM

GAS CALCULATIONS

SALT LAKE CITY = 4,265' ELEVATION
.890 DERATE = 890 BTU/CU.FT
PIPE x 1.4 (FITTINGS & LOSSES)
5# - EQUIVALENT LENGTH = 500 FT.
2,584 CFH TOTAL AS DESIGNED.

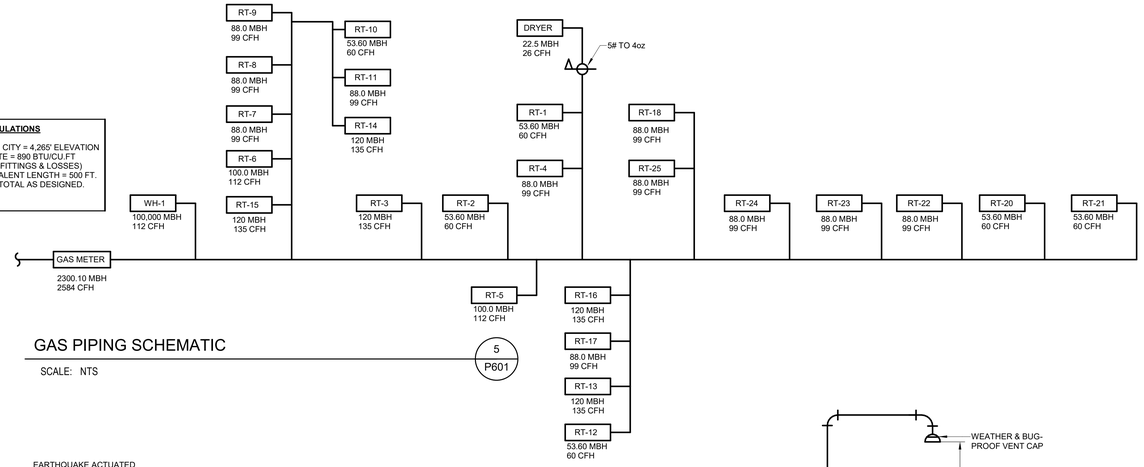

GAS PIPING SCHEMATIC

SCALE: NTS

5 / P601

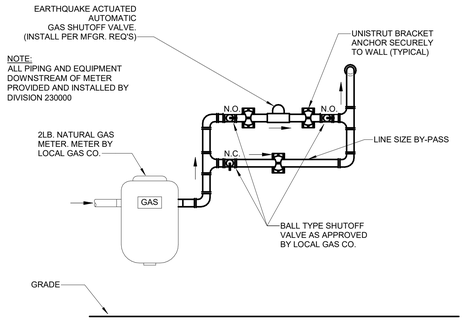

SEISMIC GAS VALVE INSTALLATION DETAIL

SCALE: NTS

9 / P601

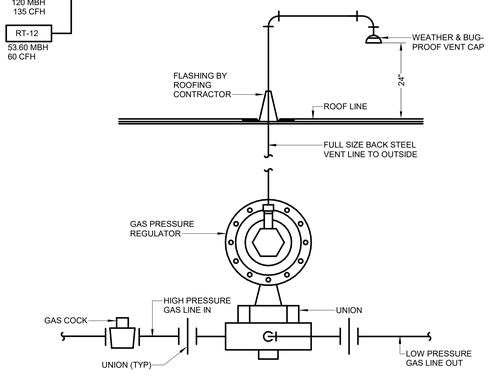

GAS PRESSURE REGULATOR DETAIL

SCALE: NTS

6 / P601

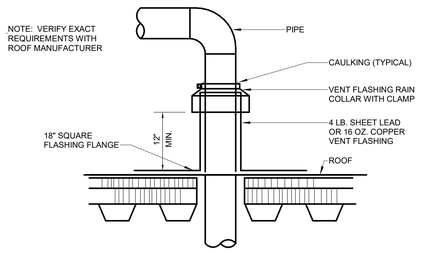

PIPE THRU ROOF PENETRATION DETAIL

SCALE: NTS

10 / P601

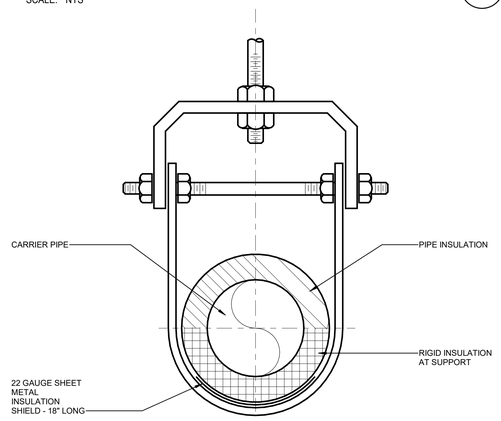

PIPE HANGER DETAIL

SCALE: NTS

7 / P601

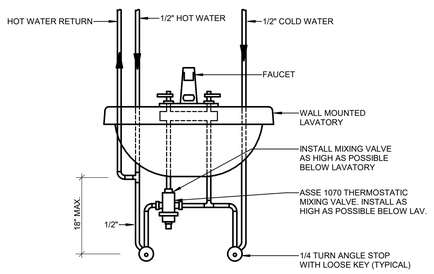

PUBLIC LAVATORY PIPING DETAIL

SCALE: NTS

12 / P601

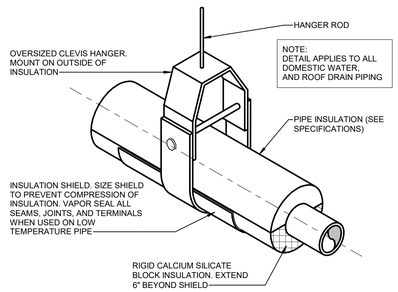

PIPE SUPPORT DETAIL (PLUMBING)

SCALE: NTS

8 / P601

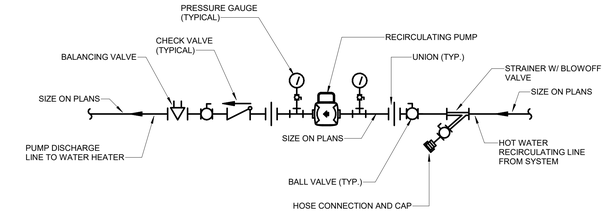

MOUNT ASSEMBLY AT 60" ABOVE FINISHED FLOOR

CIRCULATING PUMP DETAIL

SCALE: NTS

1 / P601

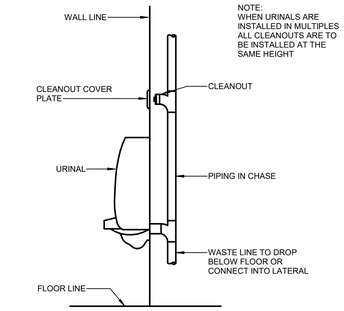

CLEANOUT AT URINAL DETAIL

SCALE: NTS

2 / P601

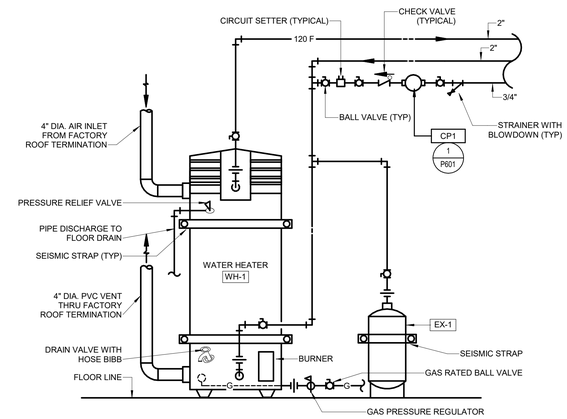

GAS FIRED WATER HEATER DETAIL

SCALE: NTS

3 / P601

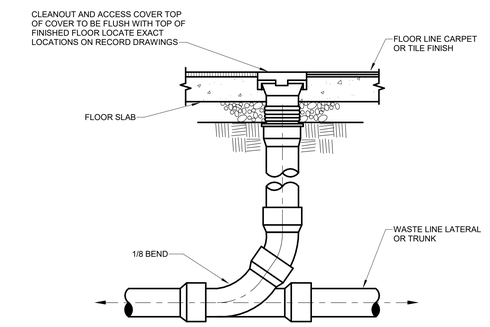

FLOOR CLEANOUT DETAIL

SCALE: NTS

4 / P601

MHTN ARCHITECTS
MHTN Architects, Inc.
280 South 400 West
Suite 250
Salt Lake City, Utah 84101
Telephone (801) 595-6700
www.mhtn.com

OLSEN & PETERSON
consulting engineers, inc.
14 East 2700 South, Salt Lake City, UT 84115
Phone: (801) 486-4646 Fax: (801) 467-2551

JORDAN SCHOOL DISTRICT

JORDAN LEARNING CENTER

3706 WEST 9800 SOUTH
SOUTH JORDAN, UT 84009

©2023 MHTN ARCHITECTS, INC.
Confidentiality Notice:
This document is intended for use on the Project identified herein by individuals and companies involved in the design, permitting, bidding and construction of the Project. MHTN Architects, Inc. grants limited rights to distribute and reproduce this document for this express purpose only. Distribution, printing or copying this document for purposes other than those indicated is strictly prohibited. If a digital copy of this document is received in error, please delete it.

SEAL

LICENSED PROFESSIONAL ENGINEER
#334524-2202
JAMES AUSTIN BERRETT
8/21/2024
UTAH

MHTN PROJECT NO. 2024528

Original drawing is 30 x 42. Do not scale contents of this drawing.

REVISIONS
CONTRACTOR TO VERIFY DRAWINGS IN FIELD. USE REFLECT LAST REVISION DATE.

NO.	DATE	DESCRIPTION

ISSUE
CONSTRUCTION DOCUMENTS
AUGUST 29, 2024

SHEET NAME
PLUMBING DETAILS

SHEET NUMBER
P601

Autodesk Docs://2024528 JSD Retail Remodel/MECH24 JSD Retail Remodel.rvt
8/27/2024 5:22:03 PM

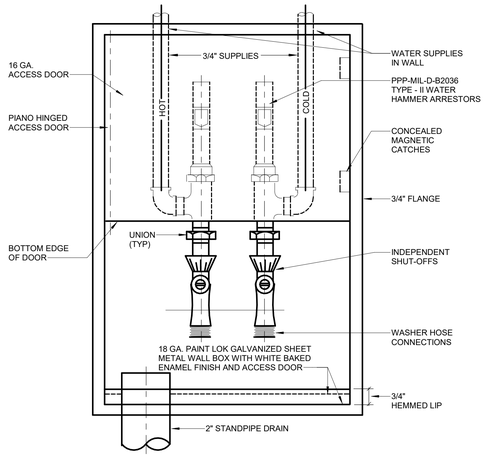

WASHER ROUGH-IN DETAIL

SCALE: NTS

9 / P602

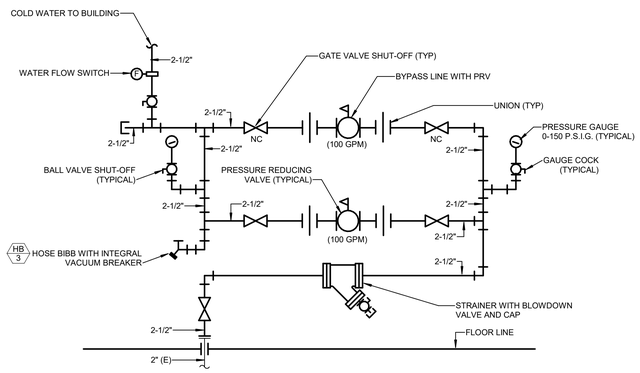

WATER PRESSURE REDUCING STATION

SCALE: NTS

10 / P602

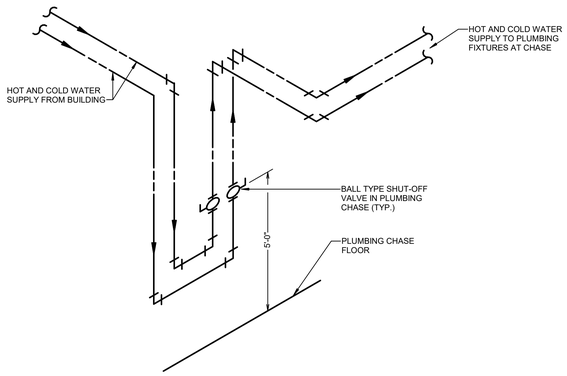

WATER SHUT-OFF AT PLUMBING CHASE DETAIL

SCALE: NTS

11 / P602

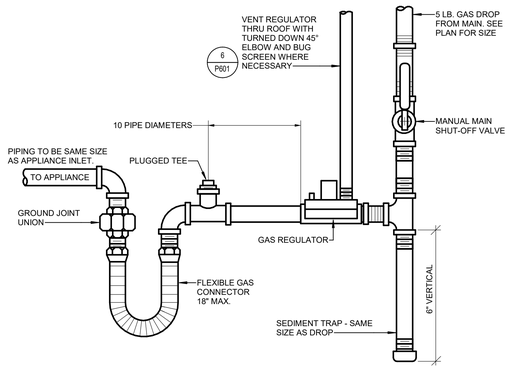

TYPICAL GAS CONNECTION TO EQUIPMENT

SCALE: NTS

5 / P602

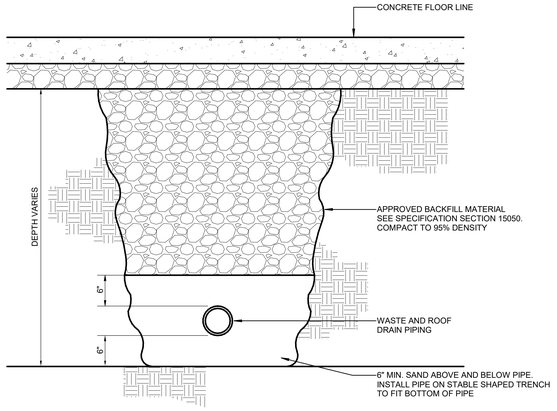

TYPICAL WASTE & ROOF DRAIN TRENCH DETAIL

SCALE: NTS

6 / P602

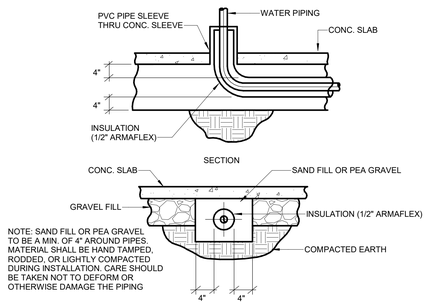

NOTE: SAND FILL OR PEA GRAVEL TO BE A MIN. OF 4" AROUND PIPES. MATERIAL SHALL BE HAND TAMPED, RODDED, OR LIGHTLY COMPACTED DURING INSTALLATION. CARE SHOULD BE TAKEN NOT TO DEFORM OR OTHERWISE DAMAGE THE PIPING

UNDER-SLAB WATER PIPING DETAIL

SCALE: NTS

7 / P602

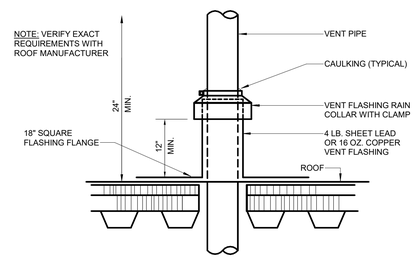

VENT THRU ROOF DETAIL

SCALE: NTS

8 / P602

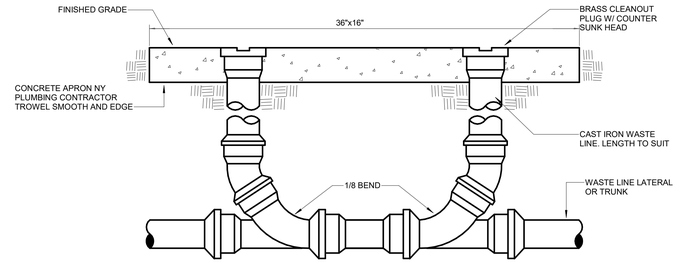

DOUBLE CLEANOUT TO GRADE DETAIL

SCALE: NTS

1 / P602

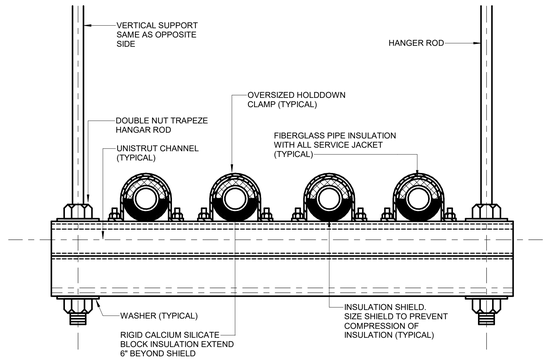

TRAPEZE PIPE SUPPORT DETAIL

SCALE: NTS

2 / P602

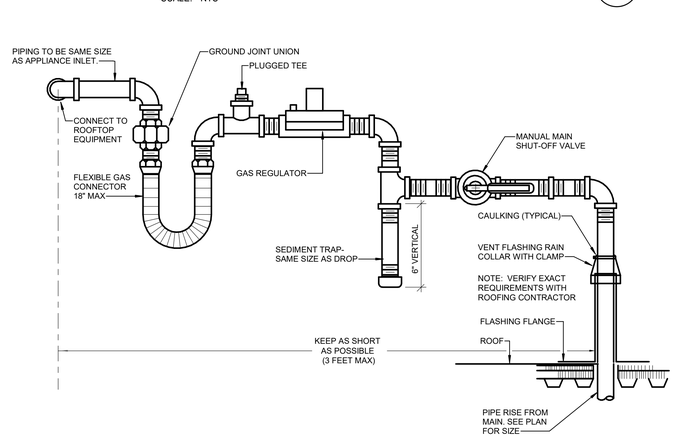

ROOFTOP GAS LINE CONNECTION DETAIL

SCALE: NTS

3 / P602

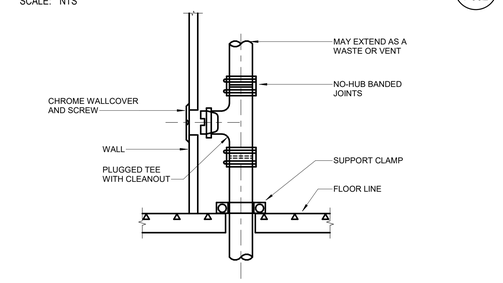

WALL CLEANOUT DETAIL

SCALE: NTS

4 / P602

MHTN ARCHITECTS
MHTN Architects, Inc.
280 South 400 West
Suite 250
Salt Lake City, Utah 84101
Telephone (801) 595-6700
www.mhtn.com

OLSEN & PETERSON
consulting engineers, inc.
14 East 2700 South, Salt Lake City, UT 84115
Phone: (801) 486-4646 Fax: (801) 467-2551

JORDAN SCHOOL DISTRICT

JORDAN LEARNING CENTER

3706 WEST 9800 SOUTH
SOUTH JORDAN, UT 84009

©2023 MHTN ARCHITECTS, INC.
Confidentiality Notice:
This document is intended for use on the Project identified herein by individuals and companies involved in the design, permitting, bidding and construction of the Project. MHTN Architects, Inc. grants limited rights to distribute and reproduce this document for this express purpose only. Distribution, printing or copying this document for purposes other than those indicated is strictly prohibited. If a digital copy of this document is received in error, please delete it.

SEAL

MHTN PROJECT NO. 2024528

Original drawing is 30 x 42. Do not scale contents of this drawing.

REVISIONS
CONTRACTOR TO VERIFY DRAWINGS IN FIELD USE REFLECT LAST REVISION DATE.

NO.	DATE	DESCRIPTION

ISSUE
CONSTRUCTION DOCUMENTS
AUGUST 29, 2024

SHEET NAME
PLUMBING DETAILS

SHEET NUMBER
P602

Autodesk Docs://2024528 JSD Retail Remodel/MEC+I24 JSD Retail Remodel.rvt
8/27/2024 5:22:06 PM

NOTES:
1. INSTALL BACK FLOW PREVENTER ON WALL OPPOSITE SS-1 FAUCET ADJACENT TO ELECTRICAL OUTLET.
2. INSTALL BACK FLOW PREVENTER 6" OFF WALL.
3. INSTALL BACK FLOW PREVENTER 60" AFF AND 12" ABOVE TOP OF MIXING STATION.

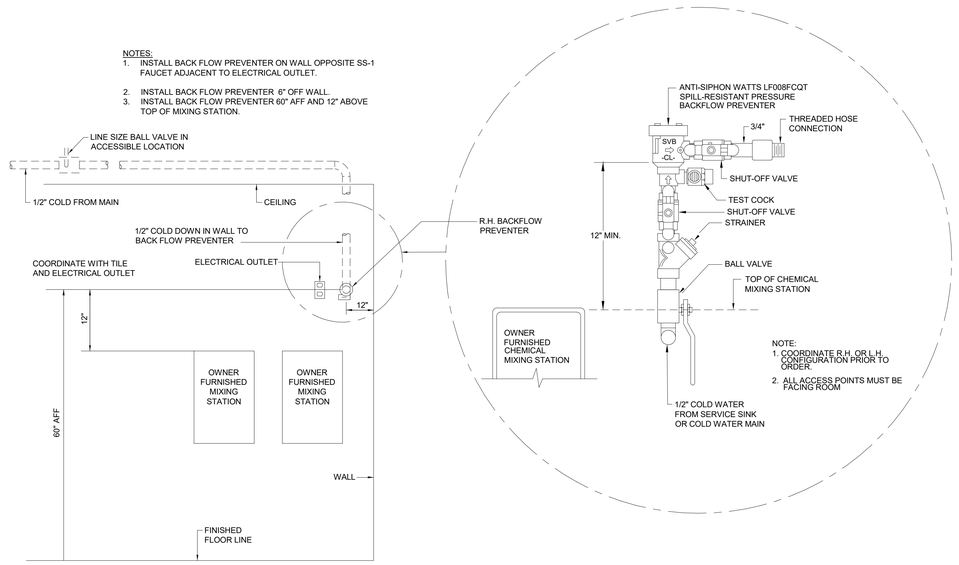

NOTE:
1. COORDINATE R.H. OR L.H. CONFIGURATION PRIOR TO ORDER.
2. ALL ACCESS POINTS MUST BE FACING ROOM

ANTI-SIPHON SPILL-RESISTANT BACK FLOW PREVENTER DETAIL 1 P603

NOT TO SCALE

MHTN ARCHITECTS

MHTN Architects, Inc.
280 South 400 West
Suite 250
Salt Lake City, Utah 84101
Telephone (801) 595-6700
www.mhtn.com

OLSEN & PETERSON
consulting engineers, inc.
14 East 2700 South, Salt Lake City, UT 84115
Phone: (801) 486-4846 Fax: (801) 487-2551

JORDAN SCHOOL DISTRICT

JORDAN LEARNING CENTER

3706 WEST 9800 SOUTH
SOUTH JORDAN, UT 84009

©2023 MHTN ARCHITECTS, INC.

Confidentiality Notice:
This document is intended for use on the Project identified herein by individuals and companies involved in the design, permitting, bidding and construction of the Project. MHTN Architects, Inc. grants limited rights to distribute and reproduce this document for this express purpose only. Distribution, printing or copying this document for purposes other than those indicated is strictly prohibited. If a digital copy of this document is received in error, please delete it.

SEAL

LICENSED PROFESSIONAL ENGINEER
#334524-2202
JAMES AUSTIN BERRETT
8/29/2024
UTAH

MHTN PROJECT NO. 2024528

Original drawing is 30 x 42. Do not scale contents of this drawing.

REVISIONS
CONTRACTOR TO VERIFY DRAWINGS IN FIELD USE REFLECT LAST REVISION DATE.

NO.	DATE	DESCRIPTION

ISSUE
CONSTRUCTION DOCUMENTS
AUGUST 29, 2024

SHEET NAME
PLUMBING DETAILS

SHEET NUMBER
P603

Autodesk Docs://2024528 JSD Retail Remodel/MECH24 JSD Retail Remodel.rvt
8/27/2024 5:22:06 PM

GENERAL NOTE

ALL COVER PLATE FINISHES ON FULL CONCEALED HEADS ARE TO BE COORDINATE WITH ARCHITECT PRIOR TO INSTALL. SUBMIT SAMPLES TO ARCHITECT PRIOR TO ORDERING.

REFERENCE NOTES

#	
1	UPDATE EXISTING FIRE RISER AS REQUIRED BY NFPA
2	PROVIDE KNOXCAPS AT EXISTING FIRE DEPARTMENT CONNECTION.
3	ELECTRICAL SERVICE OR DATA STORAGE ROOM. TRANSITING FIRE PROTECTION, PIPING OVER OR THROUGH THIS AREA IS PROHIBITED.
4	CLOUD CEILINGS. VERIFY WITH ARCHECTURAL PLANS FOR ALL LOCATIONS. PROVIDE SPRINKLER PROTECTION ABOVE & BELOW CEILING CLOUDS AS REQUIRED BY NFPA. ALL HEADS LOCATED IN CEILING CLOUD ARE TO BE RIGIDLY PIPED, NO FLEX HOSE WILL BE ACCEPTABLE.
5	SKYLIGHT. PROVIDE SIDEWALL HEAD AS REQUIRED BY NFPA COORDINATE WITH ARCHITECTURAL PLANS.
6	ARCHITECTURAL CEILING BAFFLES PROVIDE FIRE PROTECTION AS REQUIRED BY NFPA.
7	CONTRACTOR TO TIE INTO AUDIOLOGY BOOTH. COORDINATE WITH BOOTH MANUFACTURER FOR REQUIREMENTS.

1 LEVEL 1 FIRE PROTECTION PLAN

SCALE: 1/8" = 1'-0"

MHTN ARCHITECTS

MHTN Architects, Inc.
280 South 400 West
Suite 250
Salt Lake City, Utah 84101
Telephone (801) 595-6700
www.mhtn.com

OLSEN & PETERSON
consulting engineers, inc.
14 East 2700 South, Salt Lake City, UT 84115
Phone: (801) 486-4646 Fax: (801) 467-2551

JORDAN SCHOOL DISTRICT

JORDAN LEARNING CENTER

3706 WEST 9800 SOUTH
SOUTH JORDAN, UT 84009

©2023 MHTN ARCHITECTS, INC.

Confidentiality Notice:
This document is intended for use on the Project identified herein by individuals and companies involved in the design, permitting, bidding and construction of the Project. MHTN Architects, Inc. grants limited rights to distribute and reproduce this document for this express purpose only. Distribution, printing or copying this document for purposes other than those indicated is strictly prohibited. If a digital copy of this document is received in error, please delete it.

SEAL

LICENSED PROFESSIONAL ENGINEER
#334524-2202
JAMES AUSTIN BERRETT
8/27/2024
UTAH

MHTN PROJECT NO. 2024528

Original drawing is 30 x 42. Do not scale contents of this drawing.

REVISIONS
CONTRACTOR TO VERIFY DRAWINGS IN FIELD USE REFLECT LAST REVISION DATE

NO	DATE	DESCRIPTION

ISSUE
CONSTRUCTION DOCUMENTS
AUGUST 29, 2024

SHEET NAME
OVERALL FIRE PROTECTION PLAN

SHEET NUMBER
FP101

Autodesk Docs://2024528 JSD Retail Remodel/ME+2424 JSD Retail Remodel.rvt
8/27/2024 5:22:10 PM

FIRE PROTECTION LEGEND

NO MARK	• LIGHT HAZARD • LAY-IN OR GYP. BOARD CEILING (VERIFY AND COORDINATE WITH ARCHITECTURAL DRAWINGS) • CONCEALED TYPE SPRINKLER HEADS SIMILAR TO VIKING VK4621 INSTALLED TIGHT TO CEILING COORDINATE COVER PLATE WITH ARCHITECT.
	• ORDINARY HAZARD, GROUP 2 • EXPOSED STRUCTURE (NO CEILING) • UPRIGHT ROUGH BRASS HEADS ON EXPOSED PIPING
	• LIGHT HAZARD • EXPOSED STRUCTURE (NO CEILING) • UPRIGHT BRASS HEADS ON EXPOSED PIPING
	• ORDINARY HAZARD, GROUP 1 • LAY-IN OR GYP. BOARD CEILING (VERIFY AND COORDINATE WITH ARCHITECTURAL DRAWINGS) • CONCEALED TYPE SPRINKLER HEADS SIMILAR TO VIKING VK4621 INSTALLED TIGHT TO CEILING WITH BRIGHT WHITE COVER PLATE
	• SKYLIGHT, LIGHT HAZARD, CHROME PLATED SIDEWALL.
	• ORDINARY HAZARD, GROUP 1 • EXPOSED STRUCTURE (NO CEILING) • UPRIGHT BRASS HEADS ON EXPOSED PIPING
	• LIGHT HAZARD • EXPOSED STRUCTURE & CEILING CLOUDS (VERIFY AND COORDINATE WITH ARCHITECTURAL DRAWINGS) • PROVIDE UPRIGHT BRASS HEADS AT EXPOSED STRUCTURE & CONCEALED TYPE SPRINKLER HEADS SIMILAR TO VIKING VK4621 WITH BRIGHT WHITE COVER PLATE IN CLOUDS.
	• LIGHT HAZARD • LAY-IN OR GYP. BOARD CEILING (VERIFY AND COORDINATE WITH ARCHITECTURAL DRAWINGS) • CONCEALED DRY TYPE SPRINKLER HEAD SIMILAR TO VIKING VK190 INSTALLED TIGHT TO CEILING WITH BRIGHT WHITE COVER PLATE

FIRE SPRINKLER RISER

SPRINKLER ALARM BELL

WALL MOUNTED SIAMESE FIRE DEPARTMENT CONNECTION W/ KNOXCAPS

NOTE: CONTRACTOR SHALL COORDINATE ALL PIPING HUNG FROM STRUCTURE WITH REQUIREMENTS OF STRUCTURAL ENGINEERS DRAWINGS. SEE STRUCTURAL DRAWINGS FOR EARTHQUAKE BRACING DESIGN VALUES.

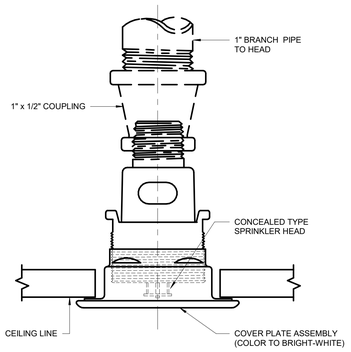

CONCEALED SPRINKLER HEAD DETAIL

SCALE: NTS

3 FP601

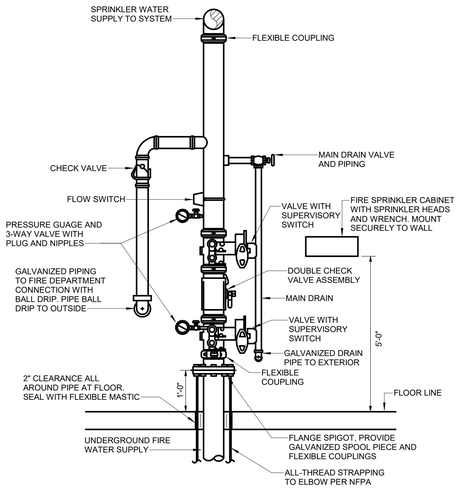

FIRE SPRINKLER RISER DETAIL

SCALE: NTS

1 FP601

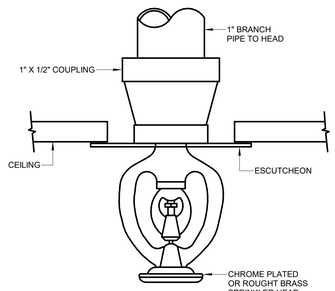

SPRINKLER HEAD DETAIL

SCALE: NTS

4 FP601

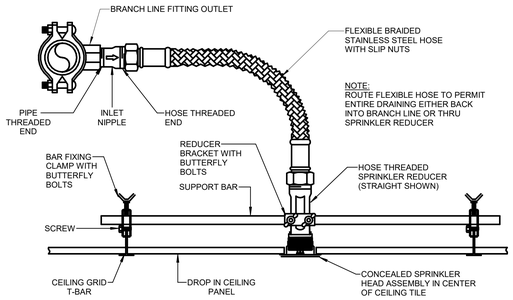

FIRE SPRINKLER HOSE DETAIL

SCALE: NTS

2 FP601

GENERAL FIRE PROTECTION NOTES

1. THE FIRE SPRINKLER CONTRACTOR SHALL COORDINATE HIS WORK WITH THE ELECTRICAL, SHEET METAL, PLUMBING, AND CEILING CONTRACTORS TO AVOID ANY CONFLICTS IN PIPE ROUTING OR HEAD LOCATIONS.
2. RUN SPRINKLING PIPING AS HIGH AS POSSIBLE IN SPACE ABOVE CEILING AND COORDINATE WITH DUCTWORK.
3. FIRE SPRINKLER PLANS SHALL BE APPROVED BY ALL GOVERNING AGENCIES PRIOR TO SUBMITTING PLANS TO THE ARCHITECT.
4. THE FIRE PROTECTION CONTRACTOR SHALL PROVIDE COMPLETE FIRE SPRINKLER SYSTEMS, INCLUDING ALL ITEMS AS REQUIRED OR RECOMMENDED BY ALL GOVERNING AGENCIES.
5. FIRE SPRINKLER SYSTEM SHALL COMPLY WITH N.F.P.A. 13, AND ALL GOVERNING AGENCIES.
6. PIPE SLEEVES THROUGH FIRERATED WALLS, PARTITIONS, AND CEILINGS SHALL BE OF FIRE RATED CONSTRUCTION. SPACE BETWEEN PIPE AND SLEEVE SHALL BE PACKED WITH FIREPROOF MATERIAL, U.L. LISTED.
7. FIRE SPRINKLER HEADS IN INDIVIDUAL ROOMS TO BE RUN IN STRAIGHT LINES AND COORDINATED WITH CEILING AND LIGHTS.
8. FIRE SPRINKLER CONTRACTOR SHALL COORDINATE HIS LOCATION OF PIPING VERY CAREFULLY WITH THE ARCHITECTURAL AND STRUCTURAL PLANS AND AS APPROVED BY THE ARCHITECT.
9. HEAD GUARDS TO BE PROVIDED IN ACCORDANCE WITH N.F.P.A.
10. FIRE SPRINKLER TEST VALVES TO BE LOCATED IN AREAS CONVENIENT TO MAINTENANCE PERSONNEL, BUT AWAY FROM PUBLIC ACCESS.
11. THE UTAH STATE FIRE MARSHALS OFFICE SHALL BE NOTIFIED (IN WRITING) AT LEAST THREE DAYS IN ADVANCE OF THE FOLLOWING:
    A. HYDROSTATIC TEST AND FINAL INSPECTION OF OVERHEAD SYSTEMS PRIOR TO INSTALLATION OF CEILINGS.
    B. FLUSHING OF UNDERGROUND PRIOR TO CONNECTION OF OVERHEAD.
    C. HYDROSTATIC TEST AND FINAL INSPECTION OF UNDERGROUND PRIOR TO BACKFILLING.
12. CONTRACTOR SHALL FIELD VERIFY ALL PIPE LOCATIONS PRIOR TO FABRICATION OF PIPE SYSTEMS.
13. FIRE PROTECTION DRAWINGS ARE DIAGRAMMATIC ONLY.
14. FIRE PROTECTION CONTRACTOR SHALL COORDINATE ROUTING, HANGING AND BRACING WITH ROOF STRUCTURE. ALL FIRE SPRINKLER PIPING SHALL COMPLY WITH THE FOLLOWING.
    A. ALL PIPING CONCENTRATED LOADS GREATER THAN 100 POUNDS SUPPORTED BY OPEN WEB STEEL JOISTS AND GIRDERS SHALL BE LOCATED WITHIN 6 INCHES OF JOIST OR GIRDER PANEL POINTS OR THE JOIST OR GIRDER SHALL BE REINFORCED WITH AN ADDITIONAL WEB MEMBER. REFER TO GENERAL STRUCTURAL NOTES AND THE "TYPICAL DETAIL AT ADDITIONAL CONCENTRATED POINT LOAD" ON THE STRUCTURAL DRAWINGS.
    B. CONCENTRATED POINT LOADS, SINGLE OR MULTIPLE, TOTALING 100 POUNDS OR LESS CAN BE LOCATED AT ANY POINT ALONG THE BOTTOM CHORD OF AN OPEN WEB JOIST OR GIRDER BETWEEN ADJACENT PANEL POINTS WITHOUT MEETING THE REQUIREMENTS ABOVE. A LIMIT OF (4) CONCENTRATED 100# MAXIMUM POINT LOADS PER JOIST OR GIRDER SHALL BE PERMITTED UNLESS SPECIFICALLY NOTED OTHERWISE ON THE STRUCTURAL DRAWINGS.
    C. JOIST BRIDGING SHALL NEVER BE USED TO SUPPORT HANGING LOADS.
    D. BRACING OF FIRE SPRINKLER PIPING TO THE BOTTOM CHORD OF JOISTS OR GIRDERS WILL NOT BE ALLOWED IN ANY INSTANCE. ALL LATERAL BRACES MUST CONNECT TO THE TOP FLANGE/TOP CHORD OF THE FRAMING MEMBER ABOVE UNLESS NOTED OTHERWISE ON THE STRUCTURAL DRAWINGS.
    E. **PIPING SHALL BE BRACED TO RESIST BOTH LATERAL AND LONGITUDINAL SEISMIC LOADS. EARTHQUAKE BRACING CALCULATIONS TO BE MADE WITH Ss VALUE IN STRUCTURAL DRAWINGS.**
    F. **RESTRAINTS OR LATERAL SWAY BRACES SHALL BE PROVIDED ON BRANCHLINES WHERE PIPING IS NOT SUPPORTED WITHIN 6 IN. OF THE STRUCTURE.**
15. STEEL ROOF DECKING SHALL NOT BE USED TO SUPPORT LOADS FROM FIRE SPRINKLER ELEMENTS OR EQUIPMENT OF ANY KIND.
16. ALL FIRE SPRINKLER PIPING RUNNING IN OCCUPIED AREAS WITH EXPOSED STRUCTURE SHALL RUN WITH SLOPE OF ROOF DECK.
17. FIRE SPRINKLER CONTRACTOR SHALL COORDINATE ANY CROSSOVERS OR DROPS AT MAIN CORRIDOR TO AVOID CONFLICTS WITH SKYLIGHTS. DROPS & CROSSOVER LOCATIONS SHALL BE VERIFIED WITH PROJECT ARCHITECT PRIOR TO INSTALLATION.
18. ALL FIRE MAINS SHALL RUN ABOVE AREAS WITH CEILINGS. NO MAINS WILL BE ALLOWED IN OCCUPIED AREAS EXPOSED TO ROOF DECK.
19. IN EXPOSED AREAS THE FIRE SPRINKLER CONTRACTOR SHALL COORDINATE PIPING & HEAD LOCATIONS WITH HVAC DUCTWORK, DIFFUSERS AND ALL LIGHTING LAYOUT.
20. FIRE SPRINKLER HEADS IN ALL CORRIDORS SHALL BE INSTALLED AS CLOSE TO THE CENTERLINE OF THE CORRIDOR AS POSSIBLE.
21. FIRE SPRINKLER HEADS SHALL BE INSTALLED IN THE CENTER QUARTER PANEL OF CEILING TILES.
22. ALL SPRINKLER MAINS SHALL RUN THRU TRUSSES OR BETWEEN TRUSSES IN TRUSS SPACE. INSTALLING MAINS BELOW BOTTOM CHORD OF TRUSSES WILL NOT BE ALLOWED.
23. FIRE SPRINKLER CONTRACTOR SHALL CAREFULLY COORDINATE SPRINKLER SYSTEM WITH ARCHITECTURAL REFLECTED CEILING PLANS FOR VARIATIONS IN CEILING TYPE AND CEILING ELEVATION CHANGES.
24. WHERE RISERS ROOMS CONTAIN A MANIFOLD WITH MORE THAN ONE RISER, EACH SYSTEM SHALL HAVE A SEPARATE CHECK VALVE, BUTTERFLY VALVE, FLOW SWITCH, TEST & DRAIN ASSEMBLY AND PRESSURE GAUGE.
25. **ALL FIRE HEADS AT CORRIDORS SHALL BE LOCATED AT CENTER OF TILE.**
26. **ALL FIRE HEADS AT CLASSROOM AND ADMINISTRATION AREAS SHALL BE LOCATED AT CENTER OF TILE AND 1/4 POINTS.**
27. **FIRE DEPARTMENT CONNECTION SHALL BE A DUPLEX TYPE WITH LOCKING KNOX CAPS PER WSD STANDARDS AND LOCAL FIRE AUTHORITY REQUIREMENTS.**

MHTN ARCHITECTS
MHTN Architects, Inc.
280 South 400 West
Suite 250
Salt Lake City, Utah 84101
Telephone (801) 595-6700
www.mhtn.com

OLSEN & PETERSON consulting engineers, inc.
14 East 2700 South, Salt Lake City, UT 84115
Phone: (801) 486-4646 Fax: (801) 467-2551

JORDAN SCHOOL DISTRICT

JORDAN LEARNING CENTER

3706 WEST 9800 SOUTH
SOUTH JORDAN, UT 84009

©2023 MHTN ARCHITECTS, INC.
Confidentiality Notice:
This document is intended for use on the Project identified herein by individuals and companies involved in the design, permitting, bidding and construction of the Project. MHTN Architects, Inc. grants limited rights to distribute and reproduce this document for this express purpose only. Distribution, printing or copying this document for purposes other than those indicated is strictly prohibited. If a digital copy of this document is received in error, please delete it.

SEAL

LICENSED PROFESSIONAL ENGINEER #334524-2202 JAMES AUSTIN BERRETT 8/21/2024 STATE OF UTAH

MHTN PROJECT NO. 2024528

Original drawing is 30 x 42. Do not scale contents of this drawing.

REVISIONS
CONTRACTOR TO VERIFY DRAWINGS IN FIELD USE REFLECT LAST REVISION DATE.

NO	DATE	DESCRIPTION

ISSUE
CONSTRUCTION DOCUMENTS
AUGUST 29, 2024

SHEET NAME
FIRE PROTECTION LEGENDS & DETAILS

SHEET NUMBER
FP601

Autodesk Docs://2024528 JSD Retail Remodel/MEC24-24 JSD Retail Remodel.rvt
8/27/2024 5:22:12 PM

ACCESS CONTROL TAG LEGEND

DOOR TYPE
DOOR NUMBER
######-X

SEE THE "ACCESS CONTROL TYPE SCHEDULE" FOR DOOR TYPES

CAMERA SURVEILLANCE TAG LEGEND

CHARACTERISTICS: REFER TO SCHEDULE

TYPE:
F = FIXED
M = MULTI-LENS
P = PTZ
T = THERMAL

MOUNTING TYPE:
C = CEILING
D = PENDANT
G = WALL GOOSE-NECK
L = POLE
N = CORNER
P = PARAPET
R = RECESSED
S = INSIDE CORNER MOUNT
W = WALL

F01R

SEE THE "CAMERA SURVEILLANCE SCHEDULE" FOR CAMERA TYPES

ACCESS CONTROL TYPE SCHEDULE

CR : ACCESS CONTROL CARD READER
KCR: ACCESS CONTROL CREDENTIAL CARD READER WITH KEYPAD
DC : ACCESS CONTROL DOOR/WINDOW CONTACT
PE : PUSH TO EXIT BUTTON
BR : ACCESS CONTROL BIOMETRIC READER
ICR: INTEGRATED LOCKSET WITH CREDENTIAL CARD READER
DP : INTRUSION DETECTION DOOR/WINDOW CONTACT
RX : REQUEST TO EXIT MOTION

TYPE	DESCRIPTION	CREDENTIAL				DOOR CONTACT		EXIT DEVICES		NOTES
		CR	BR	KCR	ICR	DC	DP	PTE	REX	
A	SINGLE DOOR	1	0	0	0	1	0	0	0	REFER TO THE SECURITY GENERAL NOTE #1
B	SINGLE DOOR	1	0	0	0	0	0	0	0	REFER TO THE SECURITY GENERAL NOTE #1
C	DOUBLE DOOR	1	0	0	0	2	0	0	0	REFER TO THE SECURITY GENERAL NOTE #1
D	DOUBLE DOOR	1	0	0	0	0	0	0	0	REFER TO THE SECURITY GENERAL NOTE #1
G	OVERHEAD GARAGE DOOR	0	0	0	0	1	0	0	0	REFER TO THE SECURITY GENERAL NOTE #1

CAMERA SURVEILLANCE TYPE SCHEDULE

TYPE	DESCRIPTION	MANFR.	CAT NO.	NOTES
F01C	INDOOR DAY/NIGHT FIXED DOME CAMERA - CEILING MOUNTED	AXIS	P3265-LV	REFER TO THE SECURITY GENERAL NOTES #3
F01W	INDOOR DAY/NIGHT FIXED DOME CAMERA - WALL MOUNTED	AXIS	P3265-LV	REFER TO THE SECURITY GENERAL NOTES #3
F02W	INDOOR DAY/NIGHT FIXED DOME CAMERA - WALL MOUNTED	AXIS	P3265-LVE	REFER TO THE SECURITY GENERAL NOTES #3
F20W	INDOOR DAY/NIGHT FIXED DOME CAMERA - WALL MOUNTED	AXIS	P3265-LVE	REFER TO THE SECURITY GENERAL NOTES #3

FLOOR BOX SCHEDULE

TYPE	DESCRIPTION	MFR.	CATALOG NO.
FB01	MULTI-SERVICE RECESSED TWO-COMPARTMENT FLOOR BOXES WITH (2) 1-GANG COMPARTMENTS FOR POWER AND (2) 1-GANG COMPARTMENT FOR DATA. PROVIDE ROUND LOW PROFILE AND BEVELED EDGE COVER; INCLUDE MUDCAP, DEVICE PLATES, BLANK PLATES, MOUNTING BRACKETS, SPACERS AND COVER ASSEMBLIES. PROVIDE FLUSH FURNITURE FEED ASSEMBLIES. PROVIDE CIRCUITS AS SHOWN THROUGH THE FLOOR BOX TO THE WIRING ASSEMBLY ON THE TABLES. PROVIDE (2) 2" CONDUITS TO THE FLOOR BOX FOR DATA CABLING WITH CABLING FROM THE MDF AS INDICATED. PROVIDE DUPLEX RECEPTACLES AND DATA OUTLETS AS SHOWN IN THE TABLES. VERIFY ALL REQUIREMENTS WITH THE TABLE INSTALLER.	WIREMOLD	RFBA2 SERIES
FB02	MULTI-SERVICE RECESSED TWO-COMPARTMENT FLOOR BOXES WITH (1) 2-GANG COMPARTMENTS FOR POWER AND (1) 1-GANG COMPARTMENT FOR DATA. INCLUDE MUDCAP, DEVICE PLATES, BLANK PLATES, MOUNTING BRACKETS, SPACERS AND COVER ASSEMBLIES. PROVIDE FLUSH TILE ASSEMBLIES. SEE SECTION 262726, WIRING DEVICES. PROVIDE (2) DUPLEX RECEPTACLES IN EACH FLOOR BOX. PROVIDE A 2" CONDUIT TO THE DATA COMPARTMENT FROM THE MDF WITH PULL STRING.	WIREMOLD	RFB2-OG

FLOOR BOX GENERAL NOTES

1. PROVIDE FLOOR BOX WITHIN CONCRETE FLOOR SLAB AS SHOWN (REVIEW ARCHITECTURAL AND ELECTRICAL DRAWINGS). PRIOR TO PLACING CONCRETE SLAB, HOLD A COORDINATION WITH ELECTRICIAN, CONCRETE SUBCONTRACTOR, AND A REPRESENTATIVE FROM THE SCHOOL DISTRICT'S FURNITURE VENDOR TO REVIEW ELECTRICAL REQUIREMENTS AND FINAL ELECTRICAL FURNITURE IN-FEED LOCATIONS.
2. PROVIDE ALL NECESSARY FLOOR BOX ACCESSORIES REQUIRED FOR POWER, DATA, AND AV DEVICES.
3. COORDINATE FINAL FINISHES WITH ARCHITECT.

SECURITY

SYMBOL	DESCRIPTION	MOUNTING HEIGHT	NOTES
###	IP CAMERA [OFOI] - ROUGH-IN ONLY [PATHWAY AND CABLING]	AS NOTED	9. 10. 12.
NVR	NETWORK VIDEO RECORDER / SERVER		12.
DC 1	ACCESS CONTROL DOOR/WINDOW SWITCH/CONTACT	DOOR JAMB	12.
DC 2	SPECIALIZED SWITCH/CONTACT (GARAGE DOOR, ROOF ACCESS DOOR/HATCH)		12.
XX X	DR=DOOR RELEASE, LD=LOCKDOWN, PE=PUSH TO EXIT, DB=DURESS/PANIC: T = TRANSMITTER, R = RECEIVER, H = HARDWIRED		12.
MD MD	INTRUSION MOTION DETECTOR SOLID - WALL MOUNTED, DASHED = CEILING		12.
GB GB	GLASS BREAK DETECTOR: SOLID = WALL MOUNTED, DASHED = CEILING		12.
AS AS	INTRUSION DETECTION ALARM SIREN AND/OR STROBE		12.
PI	INTRUSION DETECTION POP-IT MODULE		12.
KP	INTRUSION SYSTEM KEYPAD (ARM/DISARM)		12.
INT	IP TWO-WAY AUDIO & VIDEO INTERCOM (ANSWERING BASE STATION & DOOR STATION)		12.
ML	ELECTROMAGNETIC LOCK (MAG LOCK)		8. 12.
SC SC	SMOKE & C/O DETECTOR COMBO: SOLID = WALL MOUNTED, DASHED = CEILING		12.
SH SH	SMOKE & C/O DETECTOR COMBO: SOLID = WALL MOUNTED, DASHED = CEILING		12.
DH	MAGNETIC DOOR HOLD OPENER	AS NOTED	8. 12.
ES	ELECTRIC DOOR STRIKE	DOOR JAMB	8. 12.
DP	INTRUSION DETECTION DOOR / WINDOW CONTACT	DOOR JAMB	12.
EL	ELECTRIC DOOR LOCK	DOOR JAMB	8. 12.
RX	ACCESS CONTROL REQUEST TO EXIT MOTION		8. 12.
EC	ELECTRIFIED EXIT RIM DEVICE (CRASH BAR)		8. 12.
CR	ACCESS CONTROL CARD READER	+46"	1. 12.
BR	ACCESS CONTROL BIOMETRIC READER	+46"	1. 12.
KS	KEY OVERRIDE SWITCH	+46"	1. 12.
ICR	INTEGRATED LOCKSET WITH CREDENTIAL CARD READER		8. 12.
KCR	ACCESS CONTROL CREDENTIAL CARD READER WITH KEYPAD	+46"	1. 12.
WS	SECURITY WORKSTATION		12.
'ACS'	ACCESS CONTROL PANEL		12.
'IDS'	INTRUSION DETECTION PANEL		12.
'PSP'	POWER SUPPLY PANEL FOR ELECTRIFIED DOOR HARDWARE EQUIPMENT		12.

ABBREVIATIONS INDEX

ABBREV.	DESCRIPTION	ABBREV.	DESCRIPTION
#	NUMBER	MH	MANHOLE
AC	ALTERNATING CURRENT	MIC	MICROPHONE
A.F.F.	ABOVE FINISH FLOOR	MIN	MINIMUM
AIC	AMPS INTERRUPTING CAPACITY	MTG	MOUNTING
AM	AMPS METER	MTR	MOTOR
AMP	AMPERE	N/A	NOT APPLICABLE
ANN	ANNUNCIATOR	NC	NORMALLY CLOSED
ATS	AUTOMATIC TRANSFER SWITCH	NEC	NATIONAL ELECTRICAL CODE
AUX	AUXILIARY	NEMA	NATIONAL ELECT. MANUFAC. ASSOC.
AWG	AMERICAN WIRE GAUGE	NFPA	NATIONAL FIRE PROTECTION ASSOC.
BC	BARE COPPER	N.I.C.	NOT IN CONTRACT
BFG	BELOW FINISH GRADE	NO	NORMALLY OPENED
C	CONDUIT	NTS	NOT TO SCALE
CAB	CABINET	OS & Y	OUTSIDE SCREW & YOKE
CATB	COMMUNITY ANTENNA TELEVISION	PB	PUSHBUTTON
CATV	CABLE TELEVISION	PF	POWER FACTOR
CKT	CIRCUIT	PFR	PHASE FAILURE RELAY
CLG	CEILING	PNL	PANEL
CNTR	CONTRACTOR	PT	POTENTIAL TRANSFORMER
C.O.	CONDUIT ONLY	PVC	POLYVINYL CHLORIDE CONDUIT
CRT	COMPUTER TERMINAL	(R)	RELOCATE
CT	CURRENT TRANSFORMER	RECEP	RECEPTACLE
CU	COPPER	REQ	REQUIREMENT
C/W	COMPLETE WITH	RLA	RATED LOAD AMPS
DB	DECIBEL	RMP	ROCKY MOUNTAIN POWER
DC	DIRECT CURRENT	RMS	ROOT MEAN SQUARE
DWG	DRAWING	SE	SERVICE ENTRANCE
(E)	TO REMAIN, UNLESS OTHERWISE NOTES	SPEC	SPECIFICATIONS
EC	EMPTY CONDUIT	SPKR	SPEAKER
EG	EMERGENCY GENERATOR	SS	SELECTOR SWITCH
EMT	ELECTRICAL METALLIC TUBING	SW	SWITCH
EX	EXPLOSION PROOF	SWBD	SWITCHBOARD
FACP	FIRE ALARM CONTROL PANEL	SWGR	SWITCHGEAR
FC	FOOT CANDLE	TTB	TELEPHONE TERMINAL BOARD
FT	FOOT	TTC	TELEPHONE TERMINAL CABINET
GFI	GROUND FAULT INTERRUPTER	TV	TELEVISION
GND	GROUND	TYP	TYPICAL
GRC	GALVANIZED RIGID CONDUIT	UG	UNDERGROUND
HP	HORSE POWER	UPS	UNINTERRUPTED POWER SUPPLY
HZ	HERTZ	V	VOLT (KV-KILOVOLT)
IFC	INTERNATIONAL FIRE CODE	VA/R	VOLT-AMPS/REACTIVE
IG	ISOLATED GROUND	VM	VOLT METER
IMC	INTERMEDIATE METALLIC CONDUIT	W	WATTS
IN	INCH	W/	WITH
J-BOX	JUNCTION BOX	WH	WATTHOUR METER
KV	KILOVOLT	W/O	WITHOUT
KVA	KILOVOLT AMPERES	WP	WEATHERPROOF
KVAR	KILOVARS	XFMR	TRANSFORMER
KW	KILOWATT	XFMR SW	TRANSFER SWITCH
LRA	LOCKED ROTOR AMPS	XP	EXPLOSION PROOF
LTG	LIGHTING	1P	SINGLE-PHASE
MNF	MANUFACTURER	2P	TWO-POLE
MAX	MAXIMUM	3P	THREE-POLE
MB	MAIN BUS	4P	FOUR-POLE
MCC	MOTOR CONTROL CENTER	∅	PHASE
MCM	1000 CIRCULAR MILLS		

SECURITY GENERAL NOTES

1. PRIOR TO STARTING ANY WORK THE DIV.28 ACCESS CONTROL CONTRACTOR SHALL COORDINATE A MEETING WITH THE OWNER, THE DIV.8 DOOR HARDWARE CONTRACTOR, AND THE DIV.26 ELECTRICAL CONTRACTOR TO REVIEW AND DISCUSS:
A. DOOR HARDWARE SPECIFICATIONS AND DOOR ROUGH-IN REQUIREMENTS.
B. WHAT ELECTRIFIED DOOR HARDWARE IS GETTING INSTALLED ON EACH DOOR.
C. THE FAIL-SAFE OR FAIL-SECURE OPERATION FOR THE ELECTRIFIED DOOR HARDWARE.
D. THE OPERATION HOW THE ADA EQUIPMENT WILL NEED TO FUNCTION WITH THE ACCESS CONTROL SYSTEM.
E. THE POWER REQUIREMENTS FOR ALL OF THE ELECTRIFIED HARDWARE.
F. HOW EACH DOOR WILL NEED TO BE PROGRAMMED TO OPERATE DURING BUSINESS HOURS, AFTER HOURS, SCHEDULED TIMES, LOCKDOWNS, EMERGENCY SITUATIONS, FIRE ALARMS, ETC.
G. THE FIRE ALARM INTERFACE AND THE OPERATION WITH THE ACCESS CONTROL SYSTEM AND THE EQUIPMENT THAT IS NEEDED.
H. WHICH AREAS IN THE EF/ER/TR ROOM IS TO BE UTILIZED TO INSTALL THE ACCESS CONTROL HEAD-END PANEL(S) AND THE ELECTRIFIED DOOR HARDWARE POWER SUPPLIES.
I. WHICH ELECTRICAL CURCUIT THE ACCESS CONTROL HEAD-END PANELS AND ELECTRIFIED DOOR HARDWARE POWER SUPPLIES SHOULD BE CURCUITED TO (EMERGENCY POWER OR A STANDARD CURCUIT).
J. CONFIRM WITH THE OWNER AND THE DIV.8 CONTRACTOR THAT THE DIV.28 CONTRACTOR WILL BE PROVIDING AND INSTALLING THE DOOR POSITION CONATCTS FOR THE ACCESS CONTROL SYSTEM.

2. THE ACCESS CONTROL SYSTEM SHALL INCLUDE ANY RELAYS, EXTERNAL POWER SUPPLIES, AUXILIARY DEVICES OR INPUT/OUTPUT MODULES REQUIRED TO SUPPORT DOOR TYPE INDICATED FOR COMPLETE AND FUNCTIONING CARD READER AND DOOR CONTROL.

3. THE VIDEO SURVEILLANCE CONTRACTOR SHALL PROVIDE ALL FOR THE CORRECT AND NECESSARY HARDWARE AND MOUNTING EQUIPMENT FOR THE VIDEO SURVEILLANCE CAMERAS AND EQUIPMENT. PRIOR TO STARTING ANY WORK THE DIV.28 SECURITY CONTRACTOR WILL COORDINATE A MEETING THE OWNER AND THE DIV.26 ELECTRICAL CONTRACTOR AND REVIEW & DISCUSS:
A. THE ROUGH-IN REQUIREMENTS FOR EACH CAMERA LOCATION AND THE SPECIFIED RACEWAY.
B. EACH SURVEILLANCE CAMERA LOCATION, HEIGHT, ORIENTATION AND VIEW.
C. THE SPECIFIED CATEGORY CABLE AND THE OUTER CABLING JACKET COLOR.
D. WHICH EF/ER/TR ROOM(S) AND EQUIPMENT RACK(S) THE SPECIFIED CATEGORY CABLING AND THE VIDEO SURVEILLANCE EQUIPMENT WILL NEED TO BE INSTALLED INTO.

4. PROVIDE ALL SPECIFIED AND NON-SPECIFIED COMPONENTS IN ORDER TO PROVIDE A COMPLETE AND A FULLY FUNCTIONAL ACCESS CONTROL, VIDEO SURVEILLANCE, AND INTRUSION DETECTION SYSTEMS.

5. THE DIV.28 CONTRACTOR(S) SHALL CAREFULLY REVIEW THE REFLECTED CEILING PLANS AND ARCHITECTURAL ELEVATIONS FOR COMPONENT INSTALLATION.

6. THE DIV.28 ACCESS CONTROL CONTRACTOR SHALL CAREFULLY REVIEW DOOR HARDWARE SUBMITTAL AND SUMMARIZE DISCREPANCIES TO TEAM.

7. EQUIPMENT COUNTS ARE PROVIDED FOR INFORMATION ONLY AT A CONVENIENCE TO THE CONTRACTOR. IT STILL REMAINS THE CONTRACTOR'S RESPONSIBILITY TO VERIFY DRAWING QUANTITIES. IF A DISCREPANCY ARISES BETWEEN THE SCHEDULE COUNTS AND THE DRAWING COUNTS, THE HIGHEST QUANTITY SHALL BE INCLUDED IN THE BID.

8. PROVIDE FIRE ALARM INTERFACE TO UNLOCK ALL INDICATED LOCKS UPON ANY FIRE ALARM INITIATION.

9. COORDINATE WITH THE ELECTRICAL CONTRACTOR PRIOR TO ROUGH-IN TO ENSURE A COMPLETE INSTALLATION IS PROVIDED AND CORRECTLY INSTALLED.

10. ALL CABLING TO DEVICES THAT ARE INSTALLED WITHIN DOOR OR ON MULLIONS SHALL BE ROUTED THROUGH THE MULLIONS. COORDINATE INSTALLATION WITH THE DOOR/WINDOW SYSTEM INSTALLER PRIOR TO ANY ROUGH-IN. MULLION MOUNT CARD READERS DO NOT REQUIRE BACK BOX.

11. ALL FINAL CAMERA VIEWS SHALL BE APPROVED BY THE OWNER PRIOR TO PROJECT COMPLETION.

12. ALL PENETRATIONS OF FIRE RATED FLOORS, WALLS, AND CEILINGS SHALL BE SEALED WITH APPROVED MATERIAL TO MAINTAIN FIRE RATING OF SURFACE PENETRATED.

13. COORDINATE WITH THE OWNER AND REFERENCE EACH MANUFACTURER'S SPECIFICATIONS AND INSTRUCTIONS AND THE CODE REQUIREMENTS FOR THE SETUP, PROGRAMMING, AND THE INTEGRATION BETWEEN THE VIDEO SURVEILLANCE SYSTEM, ACCESS CONTROL SYSTEM, FIRE ALARM SYSTEM, ADA EQUIPMENT, ETC.

14. THE DIV.28 VIDEO SURVEILLANCE CONTRACTOR SHALL PROVIDE AN INTERACTIVE MAP IN THE SURVEILLANCE VIDEO MANAGEMENT SOFTWARE WITH CAMERAS AND ACCESS CONTROL DEVICES.

15. CONTRACTORS SHALL PROMPTLY NOTIFY ENGINEER PRIOR TO INSTALLATION OF WORK IF ANY OF THE SECURITY DEVICE LOCATIONS THAT ARE SHOWN IN THE SECURITY DRAWINGS ARE OBSTRUCTED.

16. EQUIPMENT LISTS ARE PROVIDED TO SET EQUIPMENT EXPECTATIONS AND MAY NOT BE COMPLETE. COORDINATE WITH DEVICES SHOWN ON DRAWINGS, SYSTEM RISERS, SPECIFICATIONS, AND EQUIPMENT LIST FOR SYSTEM INTENT. PROVIDE COMPLETE AND FUNCTIONAL SYSTEMS AS DESCRIBED WITHIN THE CONSTRUCTION DOCUMENTS.

17. INSTALL AND PROGRAM THE ACCESS CONTROL AND THE IP VIDEO SURVEILLANCE SYSTEMS TO THE MANUFACTURER'S INSTRUCTIONS AND SPECIFICATIONS, INDUSTRIES STANDARDS, AND TO THE OWNER'S REQUIREMENTS.

GENERAL NOTES

1. CONSULT ARCHITECTURAL REFLECTED CEILING PLANS FOR EXACT LOCATION OF ALL LIGHTING FIXTURES.
2. VERIFY ALL EQUIPMENT DIMENSIONS AND LOCATIONS BEFORE BEGINNING ROUGH IN. CONSULT ALL APPLICABLE CONTRACT DRAWINGS AND SHOP DRAWINGS TO INSURE NEC CODE CLEARANCES REQUIRED AROUND ALL ELECTRICAL EQUIPMENT.
3. CONTRACTOR SHALL VERIFY ALL ELECTRICAL LOADS (VOLTAGE, PHASE, CONNECTION REQUIREMENTS, ETC) OF ALL EQUIPMENT FURNISHED UNDER ALL DIVISIONS, INCLUDING ALL EXISTING EQUIPMENT TO BE RE-USED. REVIEW ALL SHOP DRAWINGS AND EXISTING EQUIPMENT BEFORE BEGINNING ROUGH-IN.
4. SEE SECTION 265100 (16510) OF THE SPECIFICATION FOR REQUIRED COORDINATION MEETINGS WITH MECHANICAL AND CEILING CONTRACTORS.
5. SEE APPLICABLE SHOP DRAWINGS FOR ROUGH IN LOCATION OF ALL EQUIPMENT, WIRING DEVICES, ETC. WHERE APPLICABLE MOUNT ALL WIRING DEVICES ABOVE BACK SPLASH EXCEPT THOSE SERVING UNDER COUNTER EQUIPMENT.
6. SEE SPECIFICATION FOR ENERGY SAVING LAMP AND BALLAST REQUIREMENTS.
7. FINISHES OF ALL LIGHT FIXTURES SHALL BE AS SELECTED BY ARCHITECT.
8. THE ELECTRICAL CONTRACTOR SHALL NOTIFY AND COOPERATE WITH THE MECHANICAL CONTRACTOR SUCH THAT NO PIPING, DUCTS, OR EQUIPMENT FOREIGN TO THE OPERATION OF THE ELECTRICAL EQUIPMENT SHALL BE PERMITTED TO BE INSTALLED IN, ENTER OR PASS THRU ELECTRICAL ROOMS OR SPACES, OR ABOVE OR BELOW ELECTRICAL EQUIPMENT IN OTHER AREAS.
9. ELECTRICAL BOXES SHALL NOT BE LOCATED IN MASONRY COLUMNS IN BRICK WALLS OR IN GROUTED CELLS ADJACENT TO OPENINGS. COORDINATE LOCATION OF BOXES WITH MASONRY CONTRACTOR.
10. ALL PENETRATIONS OF FIRE RATED FLOORS, WALLS, AND CEILINGS SHALL BE SEALED WITH APPROVED MATERIAL TO MAINTAIN FIRE RATING OF SURFACE PENETRATED.
11. CONTRACTOR SHALL VERIFY FURNITURE LAYOUT PRIOR TO ANY FLOORBOX OR POKE-THRU INSTALLATION. COORDINATE EXACT LOCATION OF FLOOR BOX OR POKE-THRU WITH OWNER AND FURNITURE PROVIDER PRIOR TO ROUGH-IN.
12. CIRCUITS EXTENDING OVER 70' FOR 120 VOLT AND 115' FOR 277 VOLT 20 AMP CIRCUITS SHALL BE RUN WITH CONDUCTORS PER TABLE BELOW.

20 AMP MINIMUM BRANCH CIRCUIT CONDUCTOR SIZING

MAXIMUM LENGTH	BRANCH CIRCUIT VOLTAGE	
CONDUCTOR LENGTH (FT)	120 VOLT	277 VOLT
<70	MIN. #12 AWG	MIN. #12 AWG
70 - 115	MIN. #10 AWG	MIN. #12 AWG
115 - 170	MIN. #8 AWG	MIN. #10 AWG
170 - 270	MIN. #6 AWG	MIN. #8 AWG
271 - 380	NOTE B	MIN. #8 AWG
>380	NOTE B	NOTE B

A. THESE ARE BASED ON MAXIMUM LENGTH OF CIRCUIT.
B. PERFORM VOLTAGE DROP CALCULATIONS AND PROVIDE CONDUCTOR SIZE TO KEEP BRANCH CIRCUIT VOLTAGE DROP LESS THAN 3% WITH A 15 AMP LOAD.
C. CONTRACTOR SHALL ENSURE THAT THE INSTALLATION OF EACH BRANCH CIRCUIT STAYS WITHIN 3% VOLTAGE DROP FOR A 15 AMP LOAD. IF NECESSARY,CONTRACTOR SHALL INCREASE WIRE AND CONDUIT SIZE TO MEET THE STANDARD AT NO ADDITIONAL COST TO OWNER.

SHEET INDEX

E001 ELECTRICAL SYMBOLS, SCHEDULES, AND NOTES
E002 ELECTRICAL SCHEDULES AND NOTES

E101 ELECTRICAL SITE PLAN

E211A FIRST FLOOR LIGHTING PLAN AREA A
E211B FIRST FLOOR LIGHTING PLAN AREA B

E311A FIRST FLOOR POWER PLAN - AREA A
E311B FIRST FLOOR POWER PLAN - AREA B
E312 ROOF POWER PLAN
E360 ONE-LINE DIAGRAM
E370 PANELBOARD SCHEDULES
E371 PANELBOARD SCHEDULES
E372 PANEL BOARD SCHEDULES

E501 ELECTRICAL DIAGRAMS
E502 ELECTRICAL DIAGRAMS
E503 ELECTRICAL DIAGRAMS
E504 ELECTRICAL DIAGRAMS
E505 ELECTRICAL DIAGRAMS

E411A FIRST FLOOR SYSTEM PLAN - AREA A
E411B FIRST FLOOR SYSTEM PLAN -AREA B

T001 AUDIOVISUAL SYMBOLS AND NOTES
T002 AUDIOVISUAL SCHEDULES AND NOTES
T222 FIRST FLOOR AUDIOVISUAL PLAN AREA - A
T223 FIRST FLOOR AUDIOVISUAL PLAN AREA - B
T224 FIRST FLOOR AUDIOVISUAL RCP AREA - A
T225 FIRST FLOOR AUDIOVISUAL RCP AREA - B
T501 AUDIOVISUAL ELEVATIONS
T700 AUDIOVISUAL DIAGRAMS
T701 AUDIOVISUAL DIAGRAMS
T702 AUDIOVISUAL DIAGRAMS

T311 LEVEL 1 INTERCOM OVERALL

SYMBOL LEGEND

NOTES:

1. SEE FIXTURE SCHEDULE FOR TYPE, MOUNTING AND WATTAGE.
2. HEIGHT MEASURED TO CENTER LINE OF THE BOX FROM THE FINISHED FLOOR.
3. REFER TO DRAWINGS FOR DIRECTIONAL ARROWS.
4. SUBSCRIPT INDICATES FIXTURES TO BE CONTROLLED.
5. NEMA TYPE 'ND' NON-FUSED UNLESS NOTED 'F' (FUSED). USE 'HD' 480 V.
6. HEIGHT MEASURED TO TOP OF THE BOX FROM FINISHED FLOOR.
7. PROVIDE H.O.A. AND S.S. PUSHBUTTONS AS REQUIRED.
8. DOUBLE ARROWS INDICATES A DOUBLE FACE UNIT.
9. DEVICES NOTED WITH AN 'A' INDICATE TO COORDINATE WITH MILLWORK SHOP DRAWINGS AND ELEVATIONS FOR HEIGHT.
10. SUBSCRIPT INDICATES NEMA CONFIGURATION.
11. SOLID BOX AROUND DEVICE INDICATES INSTALLED IN FLOOR. DASHED BOX AROUND DEVICE INDICATES INSTALLED IN CEILING.
12. COORDINATE WITH DOOR HARDWARE SUPPLIER.
13. FOR WATER COOLER LOCATION, SEE DIAGRAM R002. FOR ALL OTHER LOCATIONS, MOUNT AT +16" TO BOTTOM OF BOX FROM FINISHED FLOOR, OR AS NOTED.
14. ARROWS SHOWN ON DEVICE INDICATE AIMING DIRECTION.
15. CAMERA NUMBERS ARE SHOWN INSIDE THE CAMERA SYMBOL. CAMERA TYPES ARE INDICATED IN TAG.
16. MOUNT ON TRACK OF OVERHEAD DOOR, 6" FROM TOP OF DOOR, UNLESS OVERHEAD DOOR IS A ROLL UP DOOR, THEN MOUNT PER MANUFACTURER'S INSTRUCTIONS.
17. INSTALL DEVICES PER MANUFACTURER'S INSTALLATION INSTRUCTIONS.
18. DASHED LINE INDICATES EQUIPMENT CLEARANCES. ARROW INDICATES FRONT OF RACK.
19. SPEAKER TO BE MOUNTED IN HORIZONTAL POSITION.
20. MOUNTING HEIGHT IS TO BOTTOM OF DISPLAY.

*TYPICAL SYMBOL SCHEDULE. SOME SYMBOLS MAY NOT BE USED ON THIS SET OF DRAWINGS.

STANDARD MOUNTING HEIGHT UNLESS OTHERWISE NOTED ON PLANS

GENERAL

SYMBOL	DESCRIPTION	MOUNTING HEIGHT	NOTES
	ONE CIRCUIT, HOME RUN TO PANEL		
	2 CIRCUIT, HOME RUN TO PANEL		
	3 CIRCUIT, HOME RUN TO PANEL		
	CONDUIT RUN CONCEALED IN WALL OR CEILING		
	CONDUIT RUN CONCEALED IN FLOOR OR GROUND		
	CONDUIT UP		
	CONDUIT DOWN		
	CONDUIT STUB LOCATION	CAP CONDUIT	
	CONDUIT / CIRCUIT CONTINUATION		
	EQUIPMENT PANEL, SEE DRAWINGS	+72"	6.
	CABLE TRAY	AS NOTED	
	GROUND BUS BAR	+18"	6.
X	LIGHT FIXTURE (LETTER DESIGNATES TYPE)		
X X	EQUIPMENT NUMBER		
X	ARCHITECTURAL ROOM NUMBER		
X	DEVICE / EQUIPMENT (TEXT DESIGNATES TYPE) SEE SCHEDULE		
X	DEVICE / EQUIPMENT (TEXT DESIGNATES TYPE) SEE SCHEDULE / LEGEND		

MULTIPLE SYSTEM SYMBOLS

SYMBOL	DESCRIPTION	MOUNTING HEIGHT	NOTES
R	RECEPTACLE SWITCH PACK	ABOVE CEILING	
	DUPLEX RECEPTACLE UPPER OUTLET SWITCH CONTROLLED	+18" OR AS NOTED	2. 9.
	SIMPLEX RECEPTACLE	+18" OR AS NOTED	2. 9.
	DUPLEX RECEPTACLE	+18" OR AS NOTED	2. 9. 11.
A	DUPLEX RECEPTACLE		9.
G	5mA GFCI CIRCUIT BREAKER PROTECTED RECEPTACLE		13.
WP	WEATHERPROOF RECEPTACLE	+24" OR AS NOTED	2. 9.
	GROUND FAULT INTERRUPTER DUPLEX RECEPTACLE	+18" OR AS NOTED	2. 9.
	DUPLEX RECEPTACLE EMERGENCY POWER (RED)	+18" OR AS NOTED	2. 9. 11.
	FOURPLEX RECEPTACLE	+18" OR AS NOTED	2. 9. 11.
	GROUND FAULT INTERRUPTER FOURPLEX RECEPT	+18" OR AS NOTED	2. 9.
J F	JUNCTION BOX ('F' IN FLOOR)	AS NOTED	
	MOTOR OUTLET	TO SUIT EQUIP.	2.
	PUSHBUTTON	+46"	2.
	NON-FUSED DISCONNECT SWITCH	+60"	5. 6.
F	FUSED DISCONNECT SWITCH	+60"	5. 6.
B	BREAKER DISCONNECT SWITCH	+60"	5. 6.
$	SINGLE POLE SWITCH	+46"	2. 4.
$T	MANUAL STARTER THERMAL OVERLOAD SWITCH WITH PILOT LIGHT	+46"	2.
	MAGNETIC STARTER	+60"	6. 7.
	MAGNETIC STARTER / DISCONNECT COMBINATION	+60"	6. 7.
VFD	VARIABLE FREQUENCY DRIVE	+66"	6.

LIGHTING

SYMBOL	DESCRIPTION	MOUNTING HEIGHT	NOTES
	CEILING LIGHT FIXTURE	CEILING	1.
	WALL LIGHT FIXTURE	AS NOTED	1.
	RECESSED DOWNLIGHT FIXTURE	CEILING	1.
	RECESSED WALL-WASH DOWNLIGHT FIXTURE	CEILING	1.
	LIGHT FIXTURE	AS NOTED	1.
	EGRESS LIGHT FIXTURE	AS NOTED	1.
	AREA LIGHT POLE AND FIXTURE POST TOP LIGHT POLE AND FIXTURE	CONCRETE BASE	1. 14. SEE DIAGRAM
	BOLLARD	CONCRETE BASE	1. 14. SEE DIAGRAM
	STEP LIGHT FIXTURE	AS NOTED	1.
	IN-GRADE LIGHT FIXTURE	CONCRETE BASE	1.
	FLOOD OR TRACK FIXTURE	AS NOTED	1.
	CEILING / WALL MOUNTED EXIT LIGHT	CEILING/ AS NOTED	1. 3. 8.
	EMERGENCY LIGHT FIXTURE	AS NOTED	1.
	COMBO EXIT / EMERGENCY LIGHT FIXTURE	AS NOTED	1.
TC	TIME CLOCK	+60"	2.
PP	POWER PACK	ABOVE CEILING	SEE DIAGRAM, SPEC.
RC X	DIGITAL ROOM CONTROLLER (SUBSCRIPT INDICATES NUMBER OF RELAYS)	ABOVE CEILING	SEE DIAGRAM, SPEC.
EP	EMERGENCY LIGHTING CONTROL UNIT	ABOVE CEILING	SEE DIAGRAM, SPEC.
$3	THREE-WAY SWITCH	+46"	2. 4.
$4	FOUR-WAY SWITCH	+46"	2. 4.
$K	KEY OPERATED SWITCH	+46"	2. 4.
$P	SWITCH WITH PILOT LIGHT	+46"	2. 4.
$D	VARIABLE INTENSITY SWITCH	+46"	2. 4.
$TM	TIMER SWITCH	+46"	2. 4.
	MOMENTARY CONTACT SWITCH	+46"	2. 4.
X	LOW VOLTAGE WALLSTATION (SUBSCRIPT INDICATES CONFIGURATION & CONTROL SEQUENCE)	+46"	2. SEE DIAGRAM, SPEC.
	DUAL TECH. CEILING MOUNTED OCCUPANCY SENSOR (PROVIDE WITH ALL PP AND ROOM CONTROLLERS)	CEILING	SEE DIAGRAM, SPEC.
	DUAL TECH. WALL MOUNTED OCCUPANCY SENSOR (SUBSCIPT D = DIMMING AND DAYLIGHT CONTROL)	+46"	2. 4. SEE DIAGRAM, SPEC.
P	PHOTO-ELECTRIC CONTROL (LOCATE ON ROOF, FACE NORTH)	AS NOTED	MOUNT AS PER MFR.
	DIGITAL DAYLIGHT SENSOR	CEILING	SEE DIAGRAM, SPEC.

POWER - ALL 120V RECEPTACLES SHALL BE CONSIDERED TAMPERPROOF

SYMBOL	DESCRIPTION	MOUNTING HEIGHT	NOTES
IG	ISOLATED GROUND RECEPTACLE	+18" OR AS NOTED	2. 9.
U	DUPLEX RECEPTACLE WITH USB OUTLET	+18" OR AS NOTED	2. 9.
	CONTROLLED DUPLEX RECEPTACLE	+18" OR AS NOTED	2. 9.
	FOURPLEX RECEPTACLE EMERGENCY POWER (RED)	+18" OR AS NOTED	2. 9. 11.
	CONTROLLED FOURPLEX RECEPTACLE	+18" OR AS NOTED	2. 9.
	TVSS PROTECTED RECEPTACLE	+18" OR AS NOTED	2. 9.
	SPECIAL PURPOSE OUTLET	+18" OR AS NOTED	2. 10. W/ CAP.
	CORD DROP		SEE DIAGRAM
	CORD REEL		SEE DIAGRAM
	TOMBSTONE RECEPTACLE		
	POWER POLE		
EV EV	SINGLE / DUAL PORT ELECTRICAL VEHICLE CHARGER		
M	UTILITY METER / CT CABINET	+72"	6.
J	PLUGMOLD	+46" OR AS NOTED	2. SEE SPEC.
DP	FLAT PANEL DISPLAY WALL BOX TVSS RECEPT., DATA AND OTHER DEVICES, REFER TO DIAGRAMS	AS NOTED	SEE DIAGRAM, SPEC. 26 2726
CP	CEILING PROJECTION SYSTEM CEILING BOX	ABOVE CEILING	SEE DIAGRAM, SPEC.
	DOORBELL CHIME	+90"	2.
FB	FLOOR BOX - SEE SCHEDULE	FLOOR	SEE DIAGRAM, SPEC.
PT	POKE THRU - SEE SCHEDULE	FLOOR	SEE DIAGRAM, SPEC.
	PANELBOARD	+72"	6.
	MAIN DISTRIBUTION PANEL		
	TELEPHONE DEMARCATION BOARD		
CLG	EQUIPMENT CEILING RACK	CEILING	
	EQUIPMENT 4-POST RACK / CABINET	AS NOTED	18. SEE SPEC.
	EQUIPMENT 2-POST RACK	AS NOTED	18. SEE SPEC.

TELECOMMUNICATIONS

SYMBOL	DESCRIPTION	MOUNTING HEIGHT	NOTES
W	WALL PHONE	+60" OR AS NOTED	2.
	DATA OUTLET, ONE CABLE	+18" OR AS NOTED	2. 9. 11.
	DATA OUTLET, TWO CABLES	+18" OR AS NOTED	2. 9. 11.
	DATA OUTLET, THREE CABLES	+18" OR AS NOTED	2. 9. 11.
X	DATA OUTLET, "X" INDICATES QUANTITY	+18" OR AS NOTED	2. 9. 11.
	TELEVISION OUTLET	+18" OR AS NOTED	9. 11.
WAP WAP	WIRELESS ACCESS POINT, TWO CABLES SOLID = WALL, DASHED = CEILING	WALL / CEILING	11.
SPL	SPLITTER	ABOVE CEILING	
VIA	VIA	ABOVE CEILING	
BDA	FIBER BDA	ABOVE CEILING	
ANT XX	ANTENNA PS = PUBLIC SAFETY, COM = CELLULAR/COMMERCIAL	CEILING	

FIRE ALARM

SYMBOL	DESCRIPTION	MOUNTING HEIGHT	NOTES
	BELL	+94"	2.
C	CHIME / STROBE	+94" / CEILING	2.
F	FIRE ALARM MANUAL STATION	+46"	2.
H	FIRE ALARM SIGNAL HORN / STROBE	+94" / CEILING	2.
H CLG	CONCEALED FIRE ALARM HORN / STROBE	CEILING	
H	CONCEALED FIRE ALARM HORN / STROBE WALL	+94"	2.
E	FIRE ALARM SPEAKER / STROBE	+94" / CEILING	2.
E CLG	CONCEALED FIRE ALARM SPEAKER / STROBE	CEILING	
E	CONCEALED FIRE ALARM SPEAKER / STROBE WALL	+94"	2.
S	FIRE ALARM STROBE	+94" / CEILING	2.
S CLG	CONCEALED FIRE ALARM STROBE	CEILING	
S	CONCEALED FIRE ALARM STROBE WALL	+94"	2.
K	FIRE ALARM SPEAKER ONLY	+94" / CEILING	2.
B	FIRE ALARM STROBE WITH BLUE COLORED LENS (CO VISUAL ALARM)	+94" / CEILING	2.
ANN	FIRE ALARM ANNUNCIATOR PANEL	+58"	2. SEE DIAGRAM
V	ASPIRATING SMOKE DETECTION SYSTEM	CEILING	MOUNT AS PER MFR.
B	BEAM DETECTOR		MOUNT AS PER MFR.
S	SMOKE DETECTOR	CEILING	
SC	SMOKE/CARBON MONOXIDE DETECTOR	CEILING	
C	CARBON MONOXIDE DETECTOR	CEILING	
H	HEAT DETECTOR	CEILING	
D	DUCT SMOKE DETECTOR		MTD. IN DUCT
D	FIRE/SMOKE DAMPER		
	DOOR HOLDER	AS NOTED	
FS	FLOW SWITCH		
TS	TAMPER SWITCH		
WF	WATER FLOOD INDICATOR		
	O.S. & Y. VALVE		SEE DIAGRAM
R	FIRE ALARM RELAY OR SECURITY RELAY		
CM	FIRE ALARM CONTROL MODULE		
MM	FIRE ALARM MONITOR MODULE		
TWZ	TWO-WAY COMMUNICATION SYSTEM CONTROL PANEL	+46"	2.
TW	TWO-WAY COMMUNICATION SYSTEM CALL STATION	+46"	2.
R	FIRE ALARM RELAY		

A CENTURY 100 OF DESIGN
MHTN ARCHITECTS

MHTN Architects, Inc.
280 South 400 West
Suite 250
Salt Lake City, Utah 84101
Telephone (801) 595-6700
www.mhtn.com

BNA CONSULTING
4225 Lake Park Blvd, Suite 275
West Valley City, UT 84120
P: 801.532.2196
F: 801.532.2305
www.bnaconsulting.com
SALT LAKE ST. GEORGE

JORDAN SCHOOL DISTRICT
JORDAN LEARNING CENTER
3706 WEST 9800 SOUTH
SOUTH JORDAN, UT 84009

©2023 MHTN ARCHITECTS, INC.
Confidentiality Notice:
This document is intended for use on the Project identified herein by individuals and companies involved in the design, permitting, bidding and construction of the Project. MHTN Architects, Inc. grants limited rights to distribute and reproduce this document for this express purpose only. Distribution, printing or copying this document for purposes other than those indicated is strictly prohibited. If a digital copy of this document is received in error, please delete it.

SEAL
PROFESSIONAL ENGINEER
BRIAN HICKS
No. 7709037-2202
STATE OF UTAH

MHTN PROJECT NO. 2024528

Original drawing is 30 x 42. Do not scale contents of this drawing.

REVISIONS
CONTRACTOR TO VERIFY DRAWINGS IN FIELD USE REFLECT LAST REVISION DATE.

NO.	DATE	DESCRIPTION

ISSUE
CONSTRUCTION DOCUMENTS
AUGUST 29, 2024

SHEET NAME
ELECTRICAL SYMBOLS, SCHEDULES, AND NOTES

SHEET NUMBER
E001

Autodesk Docs://2024528 JSD Retail Remodel/24133 - JSD LEARNING Center ELEC V24.rvt
8/28/2024 10:15:28 AM

EQUIPMENT SCHEDULE

CONNECTION TYPE NOTES:

1. NON-FUSED DISCONNECT SWITCH
2. FUSED DISCONNECT SWITCH
3. BREAKER IN ENCLOSURE
4. MANUAL STARTER WITH THERMAL OVERLOAD
5. MAGNETIC STARTER
6. MAGNETIC STARTER/NON-FUSED DISCONNECT COMBINATION
7. MAGNETIC STARTER/FUSED DISCONNECT COMBINATION
8. MAGNETIC STARTER/BREAKER COMBINATION
9. VARIABLE FREQUENCY DRIVE
10. REDUCED VOLTAGE STARTER
11. DIRECT CONNECTION
12. RECEPTACLE/SPECIAL PURPOSE OUTLET/ETC.
13. TWO-SPEED STARTER. COORDINATE WITH MOTOR TYPE
14. SOLID STATE SOFT-STARTER

RESPONSIBILITY LEGEND:

A. FURNISHED, INSTALLED AND CONNECTED UNDER DIVISION 26(16)
B. FURNISHED AND INSTALLED UNDER ANOTHER DIVISION. REQUIRED CONNECTION UNDER DIVISION 26(16)
C. FURNISHED UNDER ANOTHER DIVISION BUT INSTALLED AND CONNECTED UNDER DIVISION 26(16)
D. FURNISHED, INSTALLED AND CONNECTED UNDER ANOTHER DIVISION

CB = CIRCUIT BREAKER

NOTE 1: PER 250.122(A), EQUIPMENT GROUND IS NOT REQUIRED TO BE LARGER THAN THE PHASE CONDUCTOR
NOTE 2: OVERCURRENT PROTECTION DEVICE (OCPD) SHOWN IS LOCATED AT POWER PANEL. ALL FUSING TO BE SIZED IN ACCORDANCE WITH FUSE MFR RECOMMENDATION FOR MOTOR NAME PLATE RATING.
NOTE 3: ALL EQUIPMENT TO BE RATED FOR THE ENVIRONMENT FOR WHICH IT IS INSTALLED.

UNIT	#	DESCRIPTION	ELECTRICAL EQUIPMENT INFORMATION							CONDUIT SIZE	WIRE				OCPD		STARTER/ DISC/ VFD OTHER (SEE NOTES)	REMARKS
			LOAD				VOLTAGE	PHASE	FULL LOAD AMPS		SETS	QTY	SIZE	EQ. GROUND	TYPE	AMPS		
			HP	FLA	MCA	VA												
ACI	1	INDOOR AC UNIT	0.00	0 A	1 A	0 VA	208 V	1	0.8 A	3/4"	1	2	12	12	CB	15 A	2 A	POWERED BY OUTDOOR UNIT
ACI	2	INDOOR AC UNIT	0.00	0 A	1 A	0 VA	208 V	1	0.8 A	3/4"	1	2	12	12	CB	15 A	2 A	POWERED BY OUTDOOR UNIT
ACO	1	OUTDOOR AC UNIT	0.00	0 A	14 A	0 VA	208 V	1	11.2 A	3/4"	1	2	12	12	CB	20 A	2 A	
ACO	2	OUTDOOR AC UNIT	0.00	0 A	14 A	0 VA	208 V	1	11.2 A	3/4"	1	2	12	12	CB	20 A	2 A	
CP	1	PUMP	0.17	0 A	0 A	0 VA	120 V	1	4.4 A	3/4"	1	2	12	12	CB	15 A	4 A	
EF	1	EXHAUST FAN	0.00	3.8 A	0 A	0 VA	120 V	1	3.8 A	3/4"	1	2	12	12	CB	15 A	4 A	
EF	2	EXHAUST FAN	0.00	3.8 A	0 A	0 VA	120 V	1	3.8 A	3/4"	1	2	12	12	CB	15 A	4 A	
EF	3	EXHAUST FAN	0.00	3.8 A	0 A	0 VA	120 V	1	3.8 A	3/4"	1	2	12	12	CB	15 A	4 A	
EF	4	EXHAUST FAN	0.00	3.8 A	0 A	0 VA	120 V	1	3.8 A	3/4"	1	2	12	12	CB	15 A	4 A	
EF	5	EXHAUST FAN	0.00	3.8 A	0 A	0 VA	120 V	1	3.8 A	3/4"	1	2	12	12	CB	15 A	4 A	
EF	6	EXHAUST FAN	0.00	3.8 A	0 A	0 VA	120 V	1	3.8 A	3/4"	1	2	12	12	CB	15 A	4 A	
EF	7	EXHAUST FAN	0.00	3.8 A	0 A	0 VA	120 V	1	3.8 A	3/4"	1	2	12	12	CB	15 A	4 A	
EF	8	EXHAUST FAN	0.00	3.8 A	0 A	0 VA	120 V	1	3.8 A	3/4"	1	2	12	12	CB	15 A	4 A	
EF	9	EXHAUST FAN	0.00	3.8 A	0 A	0 VA	120 V	1	3.8 A	3/4"	1	2	12	12	CB	15 A	4 A	
EF	10	EXHAUST FAN	0.00	3.8 A	0 A	0 VA	120 V	1	3.8 A	3/4"	1	2	12	12	CB	15 A	4 A	
EF	11	EXHAUST FAN	0.00	5.8 A	0 A	0 VA	120 V	1	5.8 A	3/4"	1	2	12	12	CB	15 A	4 A	
EF	12	EXHAUST FAN	0.00	5.8 A	0 A	0 VA	120 V	1	5.8 A	3/4"	1	2	12	12	CB	15 A	4 A	
EUH	1	ELECTRIC UNIT HEATER	0.00	0 A	0 A	500 VA	208 V	1	2.4 A	3/4"	1	2	12	12	CB	15 A	2 A	
FH	1		0.00	0 A	0 A	0 VA	120 V	1	0.0 A	0"	0	2	Error	Error	CB	0 A	11 A	
RT	1	ROOFTOP	0.00	0 A	9 A	0 VA	480 V	3	7.2 A	3/4"	1	3	12	12	CB	15 A	2 A	CONN. FACTORY RECEP.
RT	2	ROOFTOP	0.00	0 A	9 A	0 VA	480 V	3	7.2 A	3/4"	1	3	12	12	CB	15 A	2 A	CONN. FACTORY RECEP.
RT	3	ROOFTOP	0.00	0 A	12 A	0 VA	480 V	3	9.6 A	3/4"	1	3	12	12	CB	15 A	2 A	CONN. FACTORY RECEP.
RT	4	ROOFTOP	0.00	0 A	12 A	0 VA	480 V	3	9.6 A	3/4"	1	3	12	12	CB	15 A	2 A	CONN. FACTORY RECEP.
RT	5	ROOFTOP	0.00	0 A	17 A	0 VA	480 V	3	13.6 A	3/4"	1	3	12	12	CB	25 A	2 A	CONN. FACTORY RECEP.
RT	6	ROOFTOP	0.00	0 A	17 A	0 VA	480 V	3	13.6 A	3/4"	1	3	12	12	CB	25 A	2 A	CONN. FACTORY RECEP.
RT	7	ROOFTOP	0.00	0 A	12 A	0 VA	480 V	3	9.6 A	3/4"	1	3	12	12	CB	15 A	2 A	CONN. FACTORY RECEP.
RT	8	ROOFTOP	0.00	0 A	12 A	0 VA	480 V	3	9.6 A	3/4"	1	3	12	12	CB	15 A	2 A	CONN. FACTORY RECEP.
RT	9	ROOFTOP	0.00	0 A	12 A	0 VA	480 V	3	9.6 A	3/4"	1	3	12	12	CB	15 A	2 A	CONN. FACTORY RECEP.
RT	10	ROOFTOP	0.00	0 A	9 A	0 VA	480 V	3	7.2 A	3/4"	1	3	12	12	CB	15 A	2 A	CONN. FACTORY RECEP.
RT	11	ROOFTOP	0.00	0 A	12 A	0 VA	480 V	3	9.6 A	3/4"	1	3	12	12	CB	15 A	2 A	CONN. FACTORY RECEP.
RT	12	ROOFTOP	0.00	0 A	9 A	0 VA	480 V	3	7.2 A	3/4"	1	3	12	12	CB	15 A	2 A	CONN. FACTORY RECEP.
RT	13	ROOFTOP	0.00	0 A	12 A	0 VA	480 V	3	9.6 A	3/4"	1	3	12	12	CB	15 A	2 A	CONN. FACTORY RECEP.
RT	14	ROOFTOP	0.00	0 A	12 A	0 VA	480 V	3	9.6 A	3/4"	1	3	12	12	CB	15 A	2 A	CONN. FACTORY RECEP.
RT	15	ROOFTOP	0.00	0 A	12 A	0 VA	480 V	3	9.6 A	3/4"	1	3	12	12	CB	15 A	2 A	CONN. FACTORY RECEP.
RT	16	ROOFTOP	0.00	0 A	12 A	0 VA	480 V	3	9.6 A	3/4"	1	3	12	12	CB	15 A	2 A	CONN. FACTORY RECEP.
RT	17	ROOFTOP	0.00	0 A	9 A	0 VA	480 V	3	7.2 A	3/4"	1	3	12	12	CB	15 A	2 A	CONN. FACTORY RECEP.
RT	18	ROOFTOP	0.00	0 A	12 A	0 VA	480 V	3	9.6 A	3/4"	1	3	12	12	CB	15 A	2 A	CONN. FACTORY RECEP.
RT	19	ROOFTOP	0.00	0 A	12 A	0 VA	480 V	3	9.6 A	3/4"	1	3	12	12	CB	15 A	2 A	CONN. FACTORY RECEP.
RT	20	ROOFTOP	0.00	0 A	12 A	0 VA	480 V	3	9.6 A	3/4"	1	3	12	12	CB	15 A	2 A	CONN. FACTORY RECEP.
RT	21	ROOFTOP	0.00	0 A	9 A	0 VA	480 V	3	7.2 A	3/4"	1	3	12	12	CB	15 A	2 A	CONN. FACTORY RECEP.
RT	22	ROOFTOP	0.00	0 A	12 A	0 VA	480 V	3	9.6 A	3/4"	1	3	12	12	CB	15 A	2 A	CONN. FACTORY RECEP.
RT	23	ROOFTOP	0.00	0 A	9 A	0 VA	480 V	3	7.2 A	3/4"	1	3	12	12	CB	15 A	2 A	CONN. FACTORY RECEP.
RT	24	ROOFTOP	0.00	0 A	9 A	0 VA	480 V	3	7.2 A	3/4"	1	3	12	12	CB	15 A	2 A	CONN. FACTORY RECEP.
RT	25	ROOFTOP	0.00	0 A	9 A	0 VA	480 V	3	7.2 A	3/4"	1	3	12	12	CB	15 A	2 A	CONN. FACTORY RECEP.
WH	1	WATER HEATER	0.00	8 A	0 A	0 VA	120 V	1	8.0 A	3/4"	1	2	12	12	CB	15 A	12 A	

SENSOR GENERAL NOTES

1. THE ELECTRICAL CONTRACTOR SHALL BE RESPONSIBLE FOR CONTACTING THE SENSOR MANUFACTURER FOR PROPER PLACEMENT AND ADJUSTMENT OF OCCUPANCY SENSORS.
2. PROVIDE DUAL TECHNOLOGY OCCUPANCY SENSORS AS SHOWN. LOCATE OCCUPANCY SENSORS PER MANUFACTURER FOR PROPER PLACEMENT AND ADJUSTMENT OF OCCUPANCY SENSORS. PROVIDE ADDITIONAL SENSORS IF REQUIRED TO PROPERLY COVER THE RESPECTIVE ROOM.
3. EACH ZONE SHALL HAVE COVERAGE BY OCCUPANCY SENSOR SUCH THAT NO BLIND SPOT EXIST.
4. UPON COMPLETION OF THE INSTALLATION, THE SYSTEM SHALL BE COMPLETELY COMMISSIONED BY THE MANUFACTURER'S FACTORY AUTHORIZED TECHNICIAN WHO WILL VERIFY ALL ADJUSTMENTS AND SENSOR PLACEMENT TO ENSURE A TROUBLE FREE INSTALLATION.
5. THE LOCATION AND QUANTITIES OF SENSORS SHOWN ON THE DRAWINGS ARE DIAGRAMMATIC AND INDICATE ONLY THE ROOMS WHICH ARE TO BE PROVIDED WITH SENSORS. THE ELECTRICAL CONTRACTOR SHALL PROVIDE ADDITIONAL SENSORS IF REQUIRED TO PROPERLY COVER THE RESPECTIVE ROOM.
6. PROVIDE DAYLIGHT ZONE CONTROL REQUIREMENTS PER IECC-2018 C405.2.2.3 LOCATE DAYLIGHT SENSORS PER MANUFACTURER'S RECOMMENDATION AND WHERE REQUIRED WITHIN THE ROOM FOR PROPER COVERAGE.
7. PROVIDE OCCUPANCY SENSOR WITH AN ADDITIONAL SET OF DRY CONTACTS FOR HVAC CONTROL AT EACH VAV BOX LOCATION. COORDINATE WITH MECHANICAL DRAWINGS AND THE MECHANICAL CONTRACTOR FOR EXACT LOCATIONS.

LIGHTING CONTROL INTENT NARRATIVE (IECC 2021 COMPLIANT)

THE DRAWINGS SHOW GENERAL ZONING INTENT. THE BIDDING CONTRACTOR ALONG WITH THE LIGHTING CONTROLS MANUFACTURER IS RESPONSIBLE FOR PROVIDING A SYSTEM WITH THE FEATURES NECESSARY AND MUST BE CAPABLE OF MEETING THE INTENT. THE MANUFACTURER'S REPRESENTATIVE FOR DIVISION 26 AND BIDDING CONTROLS SHALL BE ACCOUNTABLE FOR THE COMPREHENSIVE LIGHTING CONTROLS PACKAGE'S FINALIZATION IN ALIGNMENT WITH THE DESIGN INTENT DEPICTED IN THE DRAWINGS AND COMPLYING WITH IECC 2021 REQUIREMENTS. THE LIGHTING REPRESENTATIVE IS REQUIRED TO FURNISH EXHAUSTIVE SHOP DRAWINGS, ELUCIDATING THE LIGHTING CONTROL SYSTEM'S TOPOLOGY AND THE ESSENTIAL CONNECTIONS NECESSARY FOR ITS PROPER FUNCTIONING.

MULTI-PURPOSE DIVISIBLE SPACE:
THIS NARRATIVE OUTLINES THE LIGHTING CONTROL SYSTEM FOR A MULTIPURPOSE SPACE DIVISIBLE INTO FOUR EQUAL ROOMS. EACH DIVISIBLE ROOM FEATURES TWO ZONES OF LED LIGHTING - LINEAR PENDANTS AND PERIMETER CYLINDER LIGHTS. THE CONTROL SYSTEM IS DESIGNED TO PROVIDE INDEPENDENT OPERATION OF EACH ROOM WHEN SEPARATED AND UNIFIED CONTROL WHEN ROOMS ARE COMBINED.

CONTROL SYSTEM:
- **ROOM-LEVEL CONTROL:** EACH ROOM IS EQUIPPED WITH EITHER A TOUCHPANEL OR A LUTRON GRAFIK EYE CONTROLLER FOR LOCAL OPERATION OF THE LIGHTING ZONES WITHIN THAT ROOM.
- **CENTRALIZED CONTROL:** A CENTRAL LIGHTING CONTROL SYSTEM OVERSEES THE ENTIRE SPACE, CAPABLE OF RECOGNIZING THE OPEN/CLOSED STATUS OF PARTITIONS USING PARTITION SENSORS PROVIDED BY THE ELECTRICAL CONTRACTOR.
- **UNIFIED OPERATION:** WHEN PARTITIONS ARE OPEN TO COMBINE ROOMS, THE CENTRAL CONTROL SYSTEM UNIFIES THE LIGHTING CONTROL ACROSS THE COMBINED SPACE. THE TOUCHPANELS/GRAFIK EYE CONTROLLERS IN THE COMBINED SPACE WILL SEAMLESSLY OPERATE THE LIGHTING FOR THE ENTIRE AREA.
- **INDEPENDENT OPERATION:** WHEN PARTITIONS ARE CLOSED, EACH ROOM OPERATES INDEPENDENTLY. THE TOUCHPANEL/GRAFIK EYE CONTROLLER IN EACH ROOM WILL ONLY CONTROL THE LIGHTING WITHIN THAT SPECIFIC ROOM.

LIGHTING FUNCTIONALITY:
- **0-10V DIMMING:** ALL LED LIGHTING FIXTURES ARE CONTROLLED VIA 0-10V DIMMING, ALLOWING FOR SMOOTH AND PRECISE ADJUSTMENTS OF LIGHT LEVELS.
- **BASIC CONTROLS:** ON/OFF, RAISE/LOWER CONTROLS ARE PROVIDED FOR ADJUSTING LIGHTING LEVELS.
- **SCENE CONTROL:** PRE-PROGRAMMED LIGHTING SCENES ARE AVAILABLE TO CATER TO DIFFERENT ACTIVITIES WITHIN THE SPACE, SUCH AS:
- **GENERAL LIGHTING:** BALANCED LIGHTING FOR EVERYDAY USE.
- **PRESENTATION MODE:** OPTIMIZED LIGHTING FOR PRESENTATIONS AND AV USE.
- **TASK LIGHTING:** INCREASED LIGHTING LEVELS FOR SPECIFIC TASKS.
- **ZONE CONTROL:** INDIVIDUAL CONTROL OF LINEAR PENDANTS AND PERIMETER CYLINDER LIGHTS WITHIN EACH ROOM/COMBINED SPACE.

PARTITION SENSORS:
THE ELECTRICAL CONTRACTOR IS RESPONSIBLE FOR PROVIDING AND INSTALLING PARTITION SENSORS THAT INTERFACE WITH THE CENTRAL LIGHTING CONTROL SYSTEM. THESE SENSORS ARE CRUCIAL FOR THE SYSTEM TO ACCURATELY RECOGNIZE THE CONFIGURATION OF THE SPACE AND ENABLE APPROPRIATE LIGHTING CONTROL.

INTEGRATION AND FLEXIBILITY:
THE LIGHTING CONTROL SYSTEM IS DESIGNED TO BE FLEXIBLE AND ADAPTABLE TO FUTURE CHANGES IN THE SPACE CONFIGURATION. ADDITIONAL LIGHTING ZONES OR CONTROL POINTS CAN BE EASILY INTEGRATED INTO THE SYSTEM AS NEEDED.

NOTE: SPECIFIC CONTROLLER MODELS, PROGRAMMING DETAILS, AND WIRING REQUIREMENTS WILL BE DETERMINED BY THE LIGHTING SUPPLIER AND SHALL OPERATE AS NOTED WITH PROVIDE LIGHTING FIXTURES AND THE OVERALL PROJECT REQUIREMENTS.

THIS COMPREHENSIVE LIGHTING CONTROL SYSTEM WILL PROVIDE INTUITIVE AND FLEXIBLE CONTROL OF THE MULTIPURPOSE SPACE, ENHANCING ITS FUNCTIONALITY AND ADAPTABILITY TO VARIOUS ACTIVITIES AND EVENTS.

GENERAL NOTES

1. PROGRAM SYSTEM TO MEET THE REQUIREMENTS OF IECC 2021 OR CURRENT ENERGY CODE.
2. CONFIRM SWITCHING AND PROGRAMMING SCHEME WITH OWNER PRIOR TO PROGRAMMING.
3. PROGRAM SYSTEM TO INCORPORATE AUTO DAYLIGHT SAVINGS ADJUSTMENTS, ASTRONOMICAL CLOCK WITH OFFSETS, HOLIDAY DATES, AND NETWORK OVERRIDE.
4. REFER TO WALLSTATION DIAGRAMS FOR FACTORY ENGRAVED LABELING FOR ALL INDIVIDUAL PUSH-BUTTONS. DEVICE AND COVERPLATE COLORS SELECTED BY ARCHITECT.
5. SUBMIT ALL WALLSTATION LAYOUTS, ENGRAVING AND CONTROL SEQUENCES DURING THE SHOP DRAWINGS REVIEW PROCESS.
6. PROVIDE RELAY BARRIER FOR VOLTAGE AND POWER SOURCE SEPARATION (EMERGENCY AND NORMAL CIRCUITS, VOLTAGE DIFFERENCES).
7. PROGRAM NORMAL AND EMERGENCY RELAYS IN RELATED CORRIDORS TO OPERATE TOGETHER.
8. ALL RELAYS REQUIRING DIMMING AND/OR DAYLIGHT HARVESTING SHALL UTILIZE 0-10V DIMMING. PROVIDE 0-10VDIMMING WIRING AND CONTROLS AS REQUIRED.
9. PROVIDE A MINIMUM OF (5) SPARE RELAYS.
10. SYSTEM MUST INTERFACE WITH NEW OR EXISTING ENERGY MANAGEMENT SYSTEM/BMS. PROVIDE SYSTEM CONSISTING OF MONITOR(S), COMMUNICATIONS EQUIPMENT, A CONTROLLER(S), TIMER(S), OR OTHER DEVICE(S) THAT MONITOR AND/OR CONTROL AN ELECTRICAL LOAD OR POWER PRODUCTION OR STORAGE SOURCE. COORDINATE EXACT TIE-IN POINTS AND COMMUNICATION PROTOCOL/MODULES REQUIRED. PROGRAM ACCORDINGLY AND PER OWNERS REQUIREMENTS.

LIGHTING CONTROL INTENT NARRATIVE (IECC 2021 COMPLIANT)

THE DRAWINGS SHOW GENERAL ZONING INTENT. THE BIDDING CONTRACTOR ALONG WITH THE LIGHTING CONTROLS MANUFACTURER IS RESPONSIBLE FOR PROVIDING A SYSTEM WITH THE FEATURES NECESSARY AND MUST BE CAPABLE OF MEETING THE INTENT. THE MANUFACTURER'S REPRESENTATIVE FOR DIVISION 26 AND BIDDING CONTROLS SHALL BE ACCOUNTABLE FOR THE COMPREHENSIVE LIGHTING CONTROLS PACKAGE'S FINALIZATION IN ALIGNMENT WITH THE DESIGN INTENT DEPICTED IN THE DRAWINGS AND COMPLYING WITH IECC 2021 REQUIREMENTS. THE LIGHTING REPRESENTATIVE IS REQUIRED TO FURNISH EXHAUSTIVE SHOP DRAWINGS, ELUCIDATING THE LIGHTING CONTROL SYSTEM'S TOPOLOGY AND THE ESSENTIAL CONNECTIONS NECESSARY FOR ITS PROPER FUNCTIONING.

GENERAL PRINCIPLES:
- ALL INDOOR AND OUTDOOR LIGHTING WILL BE CONTROLLED BY A SYSTEM THAT PRIORITIZES ENERGY EFFICIENCY AND OCCUPANT COMFORT, MEETING IECC 2021 REQUIREMENTS.
- LIGHTING WILL PRIMARILY FOLLOW A MASTER CLOCK SCHEDULE PROVIDED BY THE OWNER, WITH MANUAL OVERRIDE THROUGH TOUCH PANELS FOR FINE-TUNING.
- 0-10V DIMMING WILL BE AVAILABLE ON ALL APPLICABLE LUMINAIRES FOR SMOOTH LIGHT LEVEL ADJUSTMENTS.
- OCCUPANCY SENSORS WILL AUTOMATICALLY DIM LIGHTS TO PRESET LEVELS (50% FOR CORRIDORS, STAIRWELLS, VESTIBULES) AFTER PERIODS OF INACTIVITY (15 MINUTES).
- DAYLIGHT SENSORS WILL FURTHER ADJUST LIGHT LEVELS IN DESIGNATED ZONES BASED ON AVAILABLE NATURAL LIGHT.

SPECIFIC AREAS:

CLASSROOMS, TEAM ROOMS, LEARNING STUDIOS:
- ROOM CONTROLLER BASED SYSTEM WITH OCCUPANCY AND DAYLIGHT SENSORS THAT MANAGE CLASSROOM LIGHTING.
- ENTERING THE SPACE TRIGGERS THE SENSORS, TURNING LIGHTS ON TO 50% BRIGHTNESS.
- OCCUPANTS CAN SET DESIRED LIGHT LEVELS FROM PRE-PROGRAMMED SCENES THROUGH THE WALL STATIONS.
- DAYLIGHT SENSORS WILL AUTOMATICALLY ADJUST LIGHT LEVELS IN DESIGNATED ZONES (PRIMARY AND SECONDARY) BASED ON NATURAL LIGHT AVAILABILITY.
- LIGHTS TURN OFF AUTOMATICALLY AFTER VACANCY OR A PRESET TIMEOUT PERIOD.
- EMERGENCY LUMINAIRES OPERATE ON THE SAME CIRCUIT AS NORMAL CLASSROOM LIGHTS.
- IN CASE OF A POWER FAILURE, DESIGNATED EMERGENCY LUMINAIRE(S)AUTOMATICALLY SWITCH TO 100% BRIGHTNESS.

RC1 WALLSTATION:
oALL ON: TURNS ALL LIGHTING RELAYS ON, BRINGING ALL DIMMING ZONES TO 100%.
oRAISE & LOWER (PRESS AND HOLD): INCREASES OR DECREASES THE BRIGHTNESS OF ALL DIMMING ZONES.
oALL OFF: TURNS OFF ALL LIGHTING LOADS.

RC2 WALLSTATION:
oALL ON: TURNS ALL LIGHTING RELAYS ON, BRINGING ALL DIMMING ZONES TO 100%.
oTEACHING WALL/AV SCREEN: TURNS OFF LIGHTING NEAR THE TEACHING WALL/AV SCREEN AND DIMS ALL OTHER ZONES TO 20%.
oQUIET TIME: SETS ALL DIMMING ZONES TO 40% BRIGHTNESS.
oRAISE & LOWER (PRESS AND HOLD): INCREASES OR DECREASES THE BRIGHTNESS OF ALL DIMMING ZONES.
oALL OFF: TURNS OFF ALL LIGHTING LOADS.

RC5 WALLSTATION:
oALL ON: TURNS ALL LIGHTING RELAYS ON, BRINGING ALL DIMMING ZONES TO 100%.
oPENDANTS: TOGGLES ON/OFF PENDANT LINEAR LIGHTS.
o2X4: TOGGLES ON/OFF 2X4 LIGHTS.
oQUIET TIME: SETS ALL DIMMING ZONES TO 40% BRIGHTNESS.
oRAISE & LOWER (PRESS AND HOLD): INCREASES OR DECREASES THE BRIGHTNESS OF ALL DIMMING ZONES.
oALL OFF: TURNS OFF ALL LIGHTING LOADS.

RECEPTION AREAS AND CONFERENCE ROOM:
- TYPICAL ROOM CONTROLLER BASED SYSTEM:

RC1 WALLSTATION:
oALL ON: TURNS ALL LIGHTING RELAYS ON, BRINGING ALL DIMMING ZONES TO 100%.
oRAISE & LOWER (PRESS AND HOLD): INCREASES OR DECREASES THE BRIGHTNESS OF ALL DIMMING ZONES.
oALL OFF: TURNS OFF ALL LIGHTING LOADS.

RC6 WALLSTATION:
oALL ON: TURNS ALL LIGHTING RELAYS ON, BRINGING ALL DIMMING ZONES TO 100%.
oRECEPT: TOGGLES ON/OFF LIGHTS IN RECEPTION AREA/.
oWAITING: TOGGLES ON/OFF LIGHTS IN WAITING AREA.
oOFFICE: TOGGLES ON/OFF LIGHTS IN OFFICE AREA.
oRAISE & LOWER (PRESS AND HOLD): INCREASES OR DECREASES THE BRIGHTNESS OF ALL DIMMING ZONES.
oALL OFF: TURNS OFF ALL LIGHTING LOADS.

RC7 WALLSTATION:
oALL ON: TURNS ALL LIGHTING RELAYS ON, BRINGING ALL DIMMING ZONES TO 100%.
oOPEN: TOGGLES ON/OFF LIGHTS IN OPEN AREA.
oRECEPT: TOGGLES ON/OFF LIGHTS IN RECEPTION AREA.
oRAISE & LOWER (PRESS AND HOLD): INCREASES OR DECREASES THE BRIGHTNESS OF ALL DIMMING ZONES.
oALL OFF: TURNS OFF ALL LIGHTING LOADS.

PROVIDE SEPERATE DIMMING CONTROLS FOR THE RECEPTION AREAS.

RC8 WALLSTATION:
oALL ON: TURNS ALL LIGHTING RELAYS ON, BRINGING ALL DIMMING ZONES TO 100%.
oAV MODE: TURNS OFF MAINS LIGHTS AND TURNS ON COVE LIGHTS TO 100%.
oMAIN: TOGGLES ON/OFF MAIN LIGHTS (b)
oCOVE: TOGGLES ON/OFF COVE LIGHTS (a) .
oRAISE & LOWER (PRESS AND HOLD): INCREASES OR DECREASES THE BRIGHTNESS OF ALL DIMMING ZONES.
oALL OFF: TURNS OFF ALL LIGHTING LOADS.

RC9 WALLSTATION:
oALL ON: TURNS ALL LIGHTING RELAYS ON, BRINGING ALL DIMMING ZONES TO 100%.
oRECEPT: TOGGLES ON/OFF LIGHTS IN RECEPTION AREA (a) .
oCORR: TOGGLES ON/OFF LIGHTS IN CORRIDOR AND PRINTING AREA (c).
oWALL: TOGGLES ON/OFF LIGHTS IN RECEPTION AREA.
oRAISE & LOWER (PRESS AND HOLD): INCREASES OR DECREASES THE BRIGHTNESS OF ALL DIMMING ZONES (a) AND (b).
oALL OFF: TURNS OFF ALL LIGHTING LOADS.

STUDENT COMMONS AREA:
- RELAY CONTROLLED LIGHT FIXTURE:

RC10 WALLSTATION:
oALL ON: TURNS ALL LIGHTING RELAYS ON, BRINGING ALL DIMMING ZONES TO 100%.
oSCENE 1: TBD.
oSCENE 2: TBD.
oRAISE & LOWER (PRESS AND HOLD): INCREASES OR DECREASES THE BRIGHTNESS OF ALL DIMMING ZONES.
oALL OFF: TURNS OFF ALL LIGHTING LOADS.

WASHROOMS:
- OCCUPANCY: LIGHTS AUTOMATICALLY TURN ON TO DAYLIGHT LEVEL WHEN USER ENTERS, AND LIGHTS WILL AUTOMATICALLY TURN OFF 15 MINUTES AFTER VACATED.

RC3 WALLSTATION:
oALL ON: TURNS ALL LIGHTING RELAYS ON, BRINGING ALL DIMMING ZONES TO 100%.
oALL OFF: TURNS OFF ALL LIGHTING LOADS.

OFFICES, TESTING, ETC:
- WALL MOUNTED OCCUPANCY WALLSTATION WITH DAYLIGHTING AND 0-10V DIMMER; LIGHTS AUTOMATICALLY TURN ON TO DAYLIGHT LEVEL WHEN USER ENTERS, AND LIGHTS WILL AUTOMATICALLY TURN OFF 15 MINUTES AFTER VACATED.
- TOGGLE CONTROL BETWEEN ON/OFF. 0-10V DIMMING, RAISE AND LOWER.

VESTIBULES:
- RELAY CONTROLLED. MASTER CLOCK SCHEDULE BY OWNER. PROGRAM ACCORDINGLY.
- LIGHTING FOLLOWS THE MASTER CLOCK SCHEDULE AND TOUCH PANEL OVERRIDES AS DEFINED ABOVE.
- OCCUPANCY SENSORS TRIGGER CORRIDOR RELAY TO DIM ALL LIGHTS TO 50% AFTER 15 MINUTES OF VACANCY.
- DAYLIGHTING SENSORS IN DESIGNATED ZONES ADJUST LIGHT LEVELS BASED ON AVAILABLE NATURAL LIGHT.
- OCCUPANCY SENSOR PLACEMENT WILL FOLLOW MANUFACTURER RECOMMENDATIONS FOR OPTIMAL DETECTION.

EGRESS VESTIBULES:
- RELAY CONTROLLED. MASTER CLOCK SCHEDULE BY OWNER. PROGRAM ACCORDINGLY.
- SAME OPERATION AS VESTIBULES, BUT EGRESS LIGHTS REMAIN ON AT 30% AFTER BUILDING CLOSURE.
- MOTION SENSORS ACTIVATE EGRESS LIGHTS TO 100% FOR 20 MINUTES AFTER DETECTING MOVEMENT, THEN DIM BACK TO 30% ON VACANCY.
- LIGHTS REMAIN AT 30% UNTIL SCHEDULED BUILDING OPENING.

CORRIDORS:
- RELAY CONTROLLED. MASTER CLOCK SCHEDULE BY OWNER. PROGRAM ACCORDINGLY.
- SAME OPERATION AS VESTIBULES, WITH 50% DIM LEVEL TRIGGERED BY OCCUPANCY SENSORS AFTER 15 MINUTES OF INACTIVITY.
- DAYLIGHTING SENSORS ADJUST LIGHT LEVELS AS DESCRIBED ABOVE.

EGRESS CORRIDORS:
- SAME OPERATION AS CORRIDORS, BUT EGRESS LIGHTS REMAIN ON AT 30% AFTER BUILDING CLOSURE.
- MOTION SENSORS ACTIVATE EGRESS LIGHTS TO 100% FOR 20 MINUTES AFTER DETECTING MOVEMENT, THEN DIM BACK TO 30% ON VACANCY.
- LIGHTS REMAIN AT 30% UNTIL SCHEDULED BUILDING OPENING.

EXTERIOR PARKING LOT:
- FOLLOWS THE MASTER CLOCK SCHEDULE WITH ASTRONOMICAL OVERRIDE (DUSK ON/11:00 PM OFF, 6 AM ON/DAWN OFF).
- SITE POLES HAVE STANDALONE DIMMING OCCUPANCY SENSORS THAT DIM TO 20% AFTER 10 MINUTES OF NO ACTIVITY.

BUILDING ENTRY SOFFITS AND FLAG POLE:
- FOLLOWS THE MASTER CLOCK SCHEDULE WITH ASTRONOMICAL OVERRIDE (DUSK ON AND DAWN OFF) AND ADDITIONAL OVERRIDE (DUSK ON/11:00 PM OFF, 6 AM ON/DAWN OFF).

BUILDING FAÇADE/WALL PACKS:
- FOLLOWS THE MASTER CLOCK SCHEDULE WITH TOUCH PANEL OVERRIDE AND ASTRONOMICAL OVERRIDE (DUSK ON).
- LIGHTS DIM TO 50% AFTER 10 PM AND TURN OFF AT DAWN.

COMPLIANCE:
THIS NARRATIVE OUTLINES A LIGHTING CONTROL SYSTEM THAT COMPLIES WITH THE LATEST IECC 2021 REQUIREMENTS, EMPHASIZING AUTOMATED CONTROLS, DAYLIGHT HARVESTING, AND ENERGY-EFFICIENT DIMMING BASED ON OCCUPANCY AND AMBIENT LIGHT LEVELS. THIS APPROACH HELPS MINIMIZE ENERGY CONSUMPTION WHILE ENSURING ADEQUATE LIGHTING FOR OCCUPANT SAFETY AND COMFORT.

EMERGENCY LIGHTING AND IBC/IECC COMPLIANCE IN ADDITION TO THE STANDARD LIGHTING CONTROL SYSTEM, THE PROJECT WILL INCLUDE AN EMERGENCY LIGHTING SYSTEM DESIGNED TO MEET THE REQUIREMENTS OF THE INTERNATIONAL BUILDING CODE (IBC) AND THE INTERNATIONAL ENERGY CONSERVATION CODE (IECC). THIS SYSTEM PRIORITIZES OCCUPANT SAFETY AND EGRESS DURING POWER OUTAGES.

EMERGENCY LIGHTING FEATURES:
- DEDICATED CIRCUITS: EMERGENCY LUMINAIRES WILL BE CONNECTED TO SEPARATE, DEDICATED CIRCUITS THAT ARE NOT AFFECTED BY NORMAL POWER OUTAGES.
- AUTOMATIC ACTIVATION: UPON DETECTION OF A POWER FAILURE, EMERGENCY LIGHTS WILL AUTOMATICALLY SWITCH ON TO 100% BRIGHTNESS WITHIN THE FACILITY.
- GENERATOR BACKUP: THE EMERGENCY LIGHTING SYSTEM WILL BE BACKED UP BY A GENERATOR TO ENSURE SUSTAINED OPERATION DURING EXTENDED POWER OUTAGES.
- EXIT PATH ILLUMINATION: EMERGENCY LIGHTING WILL BE STRATEGICALLY PLACED TO EFFECTIVELY ILLUMINATE ALL DESIGNATED EXIT PATHS AND STAIRWELLS, FACILITATING SAFE EVACUATION.
- COMPLIANCE AND INSPECTION: THE EMERGENCY LIGHTING SYSTEM WILL BE DESIGNED AND INSTALLED IN ACCORDANCE WITH IBC AND IECC REQUIREMENTS, AND WILL BE SUBJECT TO REGULAR INSPECTIONS TO ENSURE PROPER FUNCTIONALITY.

ADDITIONAL NOTES:
- THE SPECIFIED TIME DELAYS AND LIGHT LEVELS CAN BE ADJUSTED TO SUIT THE SPECIFIC NEEDS OF THE BUILDING AND OCCUPANTS. AFTER 2 MONTHS OF OCCUPANCY, LIGHTING PROGRAMMER SHALL RETURN TO MAKE ADJUSTMENTS PER THE OWNERS REQUEST.

LIGHT FIXTURE SCHEDULE

LIGHT FIXTURE ABBREVIATION SCHEDULE — PROJECT MANAGER: DRAYTON BAILEY

A.F.F. ABOVE FINISH FLOOR
WALL@CLG WALL MOUNT AT CORNER OF WALL AND CEILING
CCBA CUSTOM PAINTED COLOR AS SELECTED BY THE ARCHITECT
SCBA STANDARD PAINTED COLOR AS SELECTED BY THE ARCHITECT
CFBA CUSTOM FINISH AS SELECTED BY THE ARCHITECT
SFBA STANDARD FINISH AS SELECTED BY THE ARCHITECT

LIGHT FIXTURE GENERAL NOTES

1. REFER TO ARCHITECTURAL REFLECTED CEILING PLANS FOR LOCATIONS OF LIGHT FIXTURES AND, CONFIRM CEILING TYPES WITH LIGHT FIXTURE TRIMS. BRING ALL DISCREPANCIES OF LOCATIONS AND QUANTITIES TO THE ATTENTION OF THE ARCHITECT AND ELECTRICAL ENGINEER PRIOR TO BIDDING.
2. REFER TO ARCHITECTURAL ELEVATIONS FOR MOUNTING HEIGHTS AND LOCATIONS OF LIGHT FIXTURES. BRING ALL DISCREPENCIES TO THE ATTENTION OF THE ARCHITECT PRIOR TO BIDDING.
3. REFER TO THE SPECIFICATIONS FOR OTHER LIGHT FIXTURE, FUSING, LED DRIVERS, AND LAMP REQUIREMENTS AND ACCEPTABLE MANUFACTURERS.
4. CONFIRM AVAILABLE MOUNTING DEPTHS OF ALL LIGHT FIXTURES AND COMPARE WITH DEPTHS SHOWN ON SHOP DRAWINGS. BRING ALL POTENTIAL CONFLICT AREAS TO THE ATTENTION OF THE ARCHITECT AND ELECTRICAL ENGINEER PRIOR TO RELEASE.
5. REFER TO LIGHTING PLANS FOR ALL LINEAR FIXTURE LENGTHS. THE CATALOG NUMBER IS BASED ON THE FIXTURE SPECIFIED AND MAY NOT REFLECT THE QUANTITY OR OVERALL LENGTH OF LINEAR FIXTURES REQUIRED. CONTRACTOR TO NOTE THAT VARIOUS FIXTURE LENGTHS MAY BE REQUIRED TO ACHIEVE THE OVERALL RUN LENGTH.
6. REFER TO LIGHTING PLANS FOR ALL UNDERCABINET FIXTURE LENGTHS. THE CATALOG NUMBER IS BASED ON THE FIXTURE SPECIFIED AND MAY NOT REFLECT THE QUANTITY OR OVERALL LENGTH OF THE UNDERCABINET FIXTURES REQUIRED. CONTRACTOR TO NOTE THAT VARIOUS FIXTURE LENGTHS MAY BE REQUIRED TO ACHIEVE THE OVERALL RUN LENGTH OR TO FIT WITHIN THE MILLWORK. COORDINATE FIXTURE LAYOUT WITH MILLWORK SHOP DRAWINGS PRIOR TO LIGHTING SUBMITTALS.
7. WHEN A CONTRADICTION EXISTS BETWEEN A SPECIFIC MODEL NUMBER AND THE DESCRIPTION, NOTIFY THE ELECTRICAL ENGINEER AND/OR LIGHTING DESIGNER.
8. PRIOR APPROVALS ARE REQUIRED BEFORE BIDDING THE PROJECT AND SHALL BE SUBMITTED TO THE ELECTRICAL ENGINEER'S OFFICE AT LEAST (8) EIGHT WORKING DAYS BEFORE THE BID. PRIOR APPROVALS RECEIVED AFTER THIS TIME PERIOD SHALL BE...
9. REFER TO SPECIFICATIONS 20 0500, 26 5100 & 26 5600 (16001, 16510 & 16551).
10. VALUE ENGINEERING CONDUCTED WITHOUT THE DESIGN TEAM IE; ARCHITECT, ENGINEER & LIGHTING CONSULTANT/DESIGNER WILL NOT BE ALLOWED, REVIEWED OR APPROVED.

TYPE	DESCRIPTION	MFR.	CATALOG #	VOLTS	TOTAL WATTS	LAMP TYPE	DELIVERED LUMENS	COLOR TEMP	CRI
3PC2	3" LED PENDANT DOWNLIGHT CYLINDER; FIXTURES TO BE HUNG BETWEEN CEILING PANELS, COORDINATE FINAL HEIGHT WITH ARCHITECT; 50 DEGREE OPTICS+HEX+SOLITE LENS; 0-10V DIMMING; 50,000+ HOUR (L70); 5 YR WARRANTY	CSL LIGHTING	LP3-30-40-50-HEX-MP-CCBA-S-NCXX(SCBA)	277 V	30 VA	LED	2,440	4000 K	80+
4PRW	4" WIDE LINEAR RECESSED PERIMETER FILL FIXTURE; EXTRUDED ALUMINUM BODY; FLUSH LENS; FIXTURE LENS SHALL BE CONTINUOUS (NO BREAKS); BUILT TO LENGTH (SEE PLANS); 90 DEGREE PATTERNED CORNER INTERSECTION; CCBA; 60,000+ HOUR (L80); 5 YR. WARRANTY; 0-10V DIMMING; DRYWALL FLANGE KIT	PRUDENTIAL LIGHTING	BPRO4-REG1-LED4-SO-SEE PLANS-SCBA-PFL-WTW-SC-UNV-X3-DM01	277 V	8 VA	890 LM/FT LED, 4000K CCT, 80+ CRI	890	4000 K	80+
5PC4	5" LED PENDANT DOWNLIGHT CYLINDER; FIXTURES TO BE HUNG ABOVE CEILING PANELS, COORDINATE FINAL HEIGHT WITH ARCHITECT; 30 DEGREE OPTICS+SOLITE LENS; 0-10V DIMMING; 50,000+ HOUR (L70); 5 YR WARRANTY	CSL LIGHTING	LP5-30-40-50-MP-MB-S-NCXX(SCBA)	277 V	50 VA	LED	4,252	4000 K	80+
6LBP	6'L U-SHAPED LINEAR DIRECT/INDIRECT PENDANT LED LUMINAIRE; WIDESPREAD OPTICS (D60% / I40%); VERIFY SUSPENSION HEIGHT WITH ARCHITECT; 50,000 HOUR (L70); 0-10 DIMMING; 5 YR WARRANTY	BETA CALCO	BRID2P-SL08-DR3-LPF060-CR80-CTA40-V1-DA01-H1-DT01-HLA03-SCBA-SCBA-SCBA-EO	277 V	48 VA	LED	4,800	4000 K	80+
22LR	2'X2' HIGH PERFORMANCE LED EDGE LIGHT LUMINAIRE; ULTRA-THIN WITH REMOTE DRIVER; NARROW ALUMINUM BEZEL; OPAL PMMA LENS; GLARE-GUARD TECHNOLOGY; RECESSED INTO GRID ARCHITECTURAL CEILING; EASY TO CLEAN; 60,000 HOUR (L70); 5 YR. WARRANTY; 0-10 DIMMING	LITELINE	EDGE-22-H-4-2-UNV	277 V	20 VA	LED	2,200	4000 K	80+
22MR	2'X2' HIGH PERFORMANCE LED EDGE LIGHT LUMINAIRE; ULTRA-THIN WITH REMOTE DRIVER; NARROW ALUMINUM BEZEL; OPAL PMMA LENS; GLARE-GUARD TECHNOLOGY; RECESSED INTO GRID ARCHITECTURAL CEILING; EASY TO CLEAN; 60,000 HOUR (L70); 5 YR. WARRANTY; 0-10 DIMMING	LITELINE	EDGE-22-H-4-2-UNV	277 V	30 VA	LED	3,100	4000 K	80+
A4H	2'X4' RECESSED LED LAY-IN LUMINAIRE; RECESSED INTO ACCESSIBLE ARCHITECTURAL CEILING; EASY TO CLEAN; 60,000 HOUR (L73); 5 YR. WARRANTY; 0-10 DIMMING; FIELD-SELECTABLE LUMEN OUTPUT (HIGH, 4000K)	METALUX	24FPSL2SCT3	277 V	56 VA	6300 LUMEN LED, 4000K CCT, 80+ CRI	6,300	4000 K	80+
A4M	2'X4' RECESSED LED LAY-IN LUMINAIRE; RECESSED INTO ACCESSIBLE ARCHITECTURAL CEILING; EASY TO CLEAN; 60,000 HOUR (L73); 5 YR. WARRANTY; 0-10 DIMMING; FIELD-SELECTABLE LUMEN OUTPUT (MEDIUM, 4000K)	METALUX	24FPSL2SCT3	277 V	50 VA	5564 LUMEN LED, 4000K CCT, 80+ CRI	5,700	4000 K	80+
B2H	2'X2' RECESSED LED LAY-IN LUMINAIRE; RECESSED INTO ACCESSIBLE ARCHITECTURAL CEILING; EASY TO CLEAN; 60,000 HOUR (L73); 5 YR. WARRANTY; 0-10 DIMMING; FIELD-SELECTABLE LUMEN OUTPUT (HIGH, 4000K)	METALUX	22FPSL2SCT3	277 V	31 VA	3500 LUMEN LED, 4000K CCT, 80+ CRI			80+
B2M	2'X2' RECESSED LED LAY-IN LUMINAIRE; RECESSED INTO ACCESSIBLE ARCHITECTURAL CEILING; EASY TO CLEAN; 60,000 HOUR (L73); 5 YR. WARRANTY; 0-10 DIMMING; FIELD-SELECTABLE LUMEN OUTPUT (HIGH, 4000K)	METALUX	22FPSL2SCT3	277 V	22 VA	2460 LUMEN LED, 4000K CCT, 80+ CRI			
CUR2	2" WIDE LINEAR PATTERNED LED; RECESSED INTO INACCESSIBLE ARCHITECTURAL CEILING; DRYWALL FLANGE KIT; FLUSH, HIGH EFFICIENCY LENS; FIXTURE LENS SHALL BE CONTINUOUS (NO BREAKS); BUILT TO LENGTH/PATTERN (SEE PLANS); 50,000 HOUR (DRIVER), 117,000 HOUR (L70); 0-10 DIMMING; 5 YR WARRANTY; CCBA	LUMENWERX	CURV2RPAT-D-HLO-SW-80CRI-500-40K-#FT(SEE PLANS)-XXX-XXX-UNV-D1-1C-DMF-CF	277 V	5 VA	500 LUMEN/FT LED, 4.5W/FT, 4000K CCT, 80+ CRI	500	4000 K	80+
CVL	LOW PROFILE LINEAR LED WEDGE RAIL/COVE LUMINAIRE; ULTRA-SLIM 0.5" PROFILE, MOUNTED IN SHALLOW COVE IN CONFERENCE ROOM; ASYMMETRIC DIFFUSED LENS (40° AT 15° TILT); REMOTE DRIVER, LOCATE IN ACCESSIBLE CEILING; 50,000 HOUR (L70); 5 YR. WARRANTY; 0-10 DIMMING; FIELD MEASURE CABINET LENGTH BEFORE ORDERING; CONTRACTOR TO PROVIDE ALL POWER SUPPLIES, CONNECTORS, FEEDS, MOUNTING HARDWARE, DIMMING SWITCHES, ETC. REQUIRED FOR A COMPLETE AND WORKING SYSTEM	XICO	MWE140-#FT(SEE PLANS)-DY-E1-MWH-OA-HE80-40-A4015-350-SMC-XX-XX-UNV-FD01-NN-RXXD(VERIFY WITH FACTORY)-NN	277 V	3 VA	350 LUMEN/FT LED, 3W/FT, 4000K CCT, 80+ CRI	350	4000 K	80+
D4A	4" LED RECESSED ROUND DOWNLIGHT IN INACCESSIBLE CEILING; FRAME + TRIM KIT; SELF-FLANGED; 55,000 HOUR (L90); 5 YR WARRANTY; 0-10 DIMMING; SCBA; MEDIUM DISTRIBUTION	PRESCOLITE	LTR-4RD-H-SL10L-DM1-UNV/LTR-4RD-T-SL40K8MD-SCBA-SCBA-SCBA	277 V	12 VA	1000 LUMEN LED, 4000K CCT, 80+ CRI	1,000	4000 K	80+
L2HP	2" WIDE LINEAR DIRECT/INDIRECT PENDANT LED LUMINAIRE; WIDESPREAD OPTICS; FLUSH LENS; FIXTURE LENS SHALL BE CONTINUOUS (NO BREAKS); BUILT TO LENGTH (SEE PLANS); HANG BETWEEN CEILING BAFFLES; 50,000 HOUR (L70); 0-10 DIMMING; 5 YR WARRANTY	LUMENWERX	VIA2P-DI-WDO-FH-WIO2-SW-80CRI-750LMF-200LMF-40K-#FT(SEE PLANS)-UNV-D1-1C-ACS-CCBA-XX-XX	277 V	8 VA	750 LUMEN/FT DIRECT, 200 LUMEN/FT INDIRECT, 8.3W/FT, 4000K CCT, 80+ CRI	950	4000 K	80+
L2HPP	2" WIDE LINEAR DIRECT/INDIRECT PENDANT LED LUMINAIRE; ASYMMETRIC DIRECT REFRACTIVE OPTIC (POINT INTO THE ROOM), WIDESPREAD INDIRECT OPTIC; FLUSH LENS; FIXTURE LENS SHALL BE CONTINUOUS (NO BREAKS); BUILT TO LENGTH (SEE PLANS); HANG BETWEEN CEILING BAFFLES; 50,000 HOUR (L70); 0-10 DIMMING; 5 YR WARRANTY	LUMENWERX	VIA2P-DI-ARO2-FH-WIO2-SW-80CRI-750LMF-200LMF-40K-#FT(SEE PLANS)-UNV-D1-1C-ACS-CCBA-XX-XX	277 V	8 VA	750 LUMEN/FT DIRECT, 200 LUMEN/FT INDIRECT, 8.3W/FT, 4000K CCT, 80+ CRI	950	4000 K	80+
L2MPD	2" WIDE LINEAR DIRECT PENDANT LED LUMINAIRE; LOW-GLARE OPTIC; FLUSH LENS; FIXTURE LENS SHALL BE CONTINUOUS (NO BREAKS); BUILT TO LENGTH (SEE PLANS); HANG BETWEEN CEILING PANELS; 50,000 HOUR (L70); 0-10 DIMMING; 5 YR WARRANTY	LUMENWERX	VIA2P-D-LGO-FH-WIO2-SW-80CRI-400LMF-40K-#FT(SEE PLANS)-UNV-D1-1C-ACS-CCBA-XX-XX	277 V	6 VA	400 LUMEN/FT DIRECT, 5.7W/FT, 4000K CCT, 80+ CRI	400	4000 K	80+
L2PRD	2" DEEP REGRESSED PERIMETER SLOT SYSTEM LED LUMINAIRE; RECESSED INTO INACCESSIBLE ARCHITECTURAL CEILING; STANDARD DRYWALL FLANGE; FIXTURE LENS SHALL BE CONTINUOUS (NO BREAKS); BUILT TO LENGTH, VERIFY FIELD CONDITIONS; 60,000 HOUR (L80); 5 YR. WARRANTY; 0-10 DIMMING	LUMENWERX	V2PERD-HLO-SW-LED-80CRI-750-40-#FT(SEE PLANS)-XX-XX-UNV-D1-1-DMF-SCBA	277 V	7 VA	750 LUMEN/FT, 6 W/FT, 4000K CCT, 80+ CRI	750	4000 K	80+
L2VPD	2" WIDE LINEAR DIRECT PENDANT LED LUMINAIRE; WIDESPREAD OPTIC; FLUSH LENS; FIXTURE LENS SHALL BE CONTINUOUS (NO BREAKS); BUILT TO LENGTH (SEE PLANS); HANG BETWEEN CEILING PANELS; 50,000 HOUR (L70); 0-10 DIMMING; 5 YR WARRANTY	LUMENWERX	VIA2P-D-WDO-FH-WIO2-SW-80CRI-1000LMF-40K-#FT(SEE PLANS)-UNV-D1-1C-ACS-CCBA-XX-XX	277 V	11 VA	1000 LUMEN/FT DIRECT, 11W/FT, 4000K CCT, 80+ CRI	1,000	4000 K	80+
L4HD	6"X4' HIGH PERFORMANCE LED FLAT PANEL LUMINAIRE; ULTRA-THIN <2-3/8"; GLARE-FREE; NARROW ALUMINUM BEZEL; ACRYLIC LIGHT GUIDE, WHITE FROST LENS WITH SMOOTH PATTERN; SCRATCH AND IMPACT RESISTANT; RECESSED INTO INACCESSIBLE ARCHITECTURAL CEILING; DRYWALL FLANGE KIT; EASY TO CLEAN; 60,000 HOUR (L73); 5 YR. WARRANTY; 0-10 DIMMING; FIELD SELECTABLE LUMEN OUTPUT (HIGH, 4000K)	METALUX	4RBG6-SL1-UNV-L840+DF-64W-U	277 V	36 VA	4195 LUMEN LED, 4000K CCT, 80+ CRI			80+
L4MD	6"X4' HIGH PERFORMANCE LED FLAT PANEL LUMINAIRE; ULTRA-THIN <2-3/8"; GLARE-FREE; NARROW ALUMINUM BEZEL; ACRYLIC LIGHT GUIDE, WHITE FROST LENS WITH SMOOTH PATTERN; SCRATCH AND IMPACT RESISTANT; RECESSED INTO INACCESSIBLE ARCHITECTURAL CEILING; DRYWALL FLANGE KIT; EASY TO CLEAN; 60,000 HOUR (L73); 5 YR. WARRANTY; 0-10 DIMMING; FIELD SELECTABLE LUMEN OUTPUT (MID, 4000K)	METALUX	4RBG6-SL1-UNV-L840+DF-64W-U	277 V	28 VA	3339 LUMEN LED, 4000K CCT, 80+ CRI			80+
L8MD	6"X8' HIGH PERFORMANCE LED FLAT PANEL LUMINAIRE; ULTRA-THIN <2-3/8"; GLARE-FREE; NARROW ALUMINUM BEZEL; ACRYLIC LIGHT GUIDE, WHITE FROST LENS WITH SMOOTH PATTERN; SCRATCH AND IMPACT RESISTANT; RECESSED INTO INACCESSIBLE ARCHITECTURAL CEILING; DRYWALL FLANGE KIT; EASY TO CLEAN; 60,000 HOUR (L73); 5 YR. WARRANTY; 0-10 DIMMING; FIELD SELECTABLE LUMEN OUTPUT (MID, 4000K)	METALUX	8RBG6-SL1-UNV-L840+DF-68W-U	277 V	63 VA	7160 LUMEN LED, 4000K CCT, 80+ CRI			80+
OC13	ARCHITECTURAL 13" LED ROUND CEILING MOUNTED LUMINARIE; REPLACES EXISTING RECESSED LIGHTING FIXTURE IN DRIVE THROUGH CANOPY, COVER EXISTING HOLE COMPLETELY; HIGH IMPACT RESISTANT LENS; MARINE GRADE, CORROSION RESISTANT, DIE-CAST ALUMINUM HOUSING; IP66 RATED; 70,000 HOUR (L70); 5 YR WARRANTY; 0-10 DIMMING	FC LIGHTING	FCW3800-UNV-4K-CRI85-26L-SCBA	277 V	32 VA	LED	2,619	4000 K	85+
OFW	EXTERIOR LED FLOODLIGHT; IP66 WET LISTED; IK07 IMPACT AND VANDAL RESISTANT; ANTI-GLARE VISOR; WIDE OPTICAL DISTRIBUTION; 50,000 HOUR (L70)5 YR WARRANTY; MOUNT TO EXISTING BUILDING AND LOCATE AS HIGH AS POSSIBLE. PROVIDE REQUIRED MOUNTING HARDWARE; AIM TOWARDS FLAGPOLE ACCORDINGLY	LIGMAN	UZA-50011-40W COB-N-W40-SCBA-120/277	277 V	40 VA	LED	3,681	4000 K	80+
OLDH	PREMIUM EXTERIOR LED LINEAR LUMINAIRE (TAPE AND EXTRUSION); .88" W X .64" H; DIFFUSED LENS; WIDE OPTIC; DAMP RATED; COORDINATE OPENING, LOCATION, AND MECHANICALLY FASTEN TO BETWEEN ARCHITECTURAL CEILING AND FRAMING; FIELD MEASURE TO GET ACCURATE SIZES PRIOR TO ORDERING; PROVIDE FACTORY SHOP DRAWINGS SHOWING CONTINUOUS FIXTURE LENGTHS AND ANGLE SUGGESTIONS; REMOTE DRIVERS; VERIFY FIELD CONDITIONS; 60,000 HOUR (L80); 5 YR. WARRANTY; 0-10 DIMMING; SCBA	Q-TRAN	VERS-01-SW-6.0HE-40-DMP-DF-XX-XX-XX-XX-#FT(SEE PLANS)-SCBA+QTM-0-10V DRIVERS/PS	277 V	6 VA	616 LUMEN/FT, 6 W/FT, 4000K CCT, 80+ CRI	616	4000 K	80+
OP2	MEDIUM ARCHITECTURAL AREA LED SITE LUMINAIRE; DIE-CAST & EXTRUDED ALUMINUM HOUSING; TYPE II DISTRIBUTION, FULL CUTOFF; IP66 RATED; HOUSE SIDE SHIELD MUST BE CUPPED OPTIC STYLE; INSTALL HOUSE SIDE SHIELD WHERE INDICATED ON PLANS; DIMMING/DAWN/DUSK MOTION SENSOR, FIELD PROGRAMMABLE OUTPUT BASED ON MOTION, PROGRAMMED PER OWNERS REQUIREMENTS; 100,000 HOUR (L70); 5 YR. WARRANTY; MOUNTED ON A 25' ROUND TAPERED ALUMINUM POLE w/VIBRATION DAMPENING; MAX EPA 5.4 @ 120; LIFETIME WARRANTY ON POLE; SINGLE HEAD LUMINAIRE MOUNTING; SCBA; DLC PREMIUM LISTED	LITHONIA/GENERAL STRUCTURES INC	DSX1-P4-40K-70-T2M-MVOLT-RPA-PIRH-HS(SEE PLANS)-SCBA/CPA-2-8025-25-D1-VD-SCBA	277 V	124 VA	21,490 LUMEN LED, 4000K CCT, 70+ CRI			70+
OP4	MEDIUM ARCHITECTURAL AREA LED SITE LUMINAIRE; DIE-CAST & EXTRUDED ALUMINUM HOUSING; TYPE IVFT DISTRIBUTION, FULL CUTOFF; IP66 RATED; HOUSE SIDE SHIELD MUST BE CUPPED OPTIC STYLE; INSTALL HOUSE SIDE SHIELD WHERE INDICATED ON PLANS; DIMMING/DAWN/DUSK MOTION SENSOR, FIELD PROGRAMMABLE OUTPUT BASED ON MOTION, PROGRAMMED PER OWNERS REQUIREMENTS; 100,000 HOUR (L70); 5 YR. WARRANTY; MOUNTED ON A 25' ROUND TAPERED ALUMINUM POLE w/VIBRATION DAMPENING; MAX EPA 5.4 @120; LIFETIME WARRANTY ON POLE; SINGLE HEAD LUMINAIRE MOUNTING; SCBA; DLC PREMIUM LISTED	LITHONIA/GENERAL STRUCTURES INC	DSX1-P4-40K-70-TFTM-MVOLT-RPA-PIRH-HS(SEE PLANS)-SCBA/CPA-2-8025-25-D1-VD-SCBA	277 V	124 VA	16,000 LUMEN LED, 4000K CCT, 70+ CRI			70+
OP24	MEDIUM ARCHITECTURAL AREA LED SITE LUMINAIRE; DIE-CAST & EXTRUDED ALUMINUM HOUSING; TYPE IV FORWARD THROW AND TYPE II DISTRIBUTION, FULL CUTOFF; IP66 RATED; DIMMING/DAWN/DUSK MOTION SENSOR, FIELD PROGRAMMABLE OUTPUT BASED ON MOTION, PROGRAMMED PER OWNERS REQUIREMENTS; 100,000 HOUR (L70); 5 YR. WARRANTY; MOUNTED ON A 25' ROUND TAPERED ALUMINUM POLE w/VIBRATION DAMPENING; MAX EPA 5.4 @ 120; LIFETIME WARRANTY ON POLE; DUAL HEAD LUMINAIRE MOUNTING; SCBA; DLC PREMIUM LISTED	LITHONIA/GENERAL STRUCTURES INC	DSX1-P4-40K-70-TFTM+T2M-MVOLT-RPA-PIR-SCBA/CPA-2-8025-25-D1-VD-SCBA	277 V	148 VA	19,049+14,458 LUMEN LED, 4000K CCT, 70+ CRI			70+
OP44	MEDIUM ARCHITECTURAL AREA LED SITE LUMINAIRE; DIE-CAST & EXTRUDED ALUMINUM HOUSING; TYPE IV FORWARD THROW AND TYPE IV FORWARD THROW DISTRIBUTION, FULL CUTOFF; IP66 RATED; DIMMING/DAWN/DUSK MOTION SENSOR, FIELD PROGRAMMABLE OUTPUT BASED ON MOTION, PROGRAMMED PER OWNERS REQUIREMENTS; 100,000 HOUR (L70); 5 YR. WARRANTY; MOUNTED ON A 25' ROUND TAPERED ALUMINUM POLE w/VIBRATION DAMPENING; MAX EPA 5.4 @ 120; LIFETIME WARRANTY ON POLE; DUAL HEAD LUMINAIRE MOUNTING; SCBA; DLC PREMIUM LISTED	LITHONIA/GENERAL STRUCTURES INC	DSX1-P4-40K-70-TFTM+TFTM-MVOLT-RPA-PIR-SCBA/CPA-2-8025-25-D1-VD-SCBA	277 V	148 VA	17,800 + 17,800 LUMEN LED, 4000K CCT, 70+ CRI			70+
OW340	ARCHITECTURAL WALL MOUNTED LED SITE LUMINARIE; DIFFUSED DROP LENS; DIE-CAST & EXTRUDED ALUMINUM HOUSING; TYPE 3 DISTRIBUTION, FULL CUTOFF; IP66 RATED; 50,000 HOUR (L70); 5 YR WARRANTY; 0-10 DIMMING	LITHONIA	DSXW1-LED-20C-530-40K-T3M-MVOLT-DDL-SCBA	277 V	35 VA	4,315 LUMEN LED, 4000K CCT, 70+ CRI			80+
PBS	DECORATIVE BALLON DISCS PENDANT MOUNTED LED LUMINAIRE; ABSTRACT SHAPE; 50,000 HOUR (L70); 5 YR WARRANTY; 0-10V DIMMING; COORDINATE EXACT SUSPENSION HEIGHT AND ROTATION WITH ARCHITECT, RODS LENGTHS TO BE CUSTOMIZABLE AND REVIEWED DURING SHOP DRAWINGS; COLORS CHOSEN BY ARCHITECT	ZANEEN	D71034-SCBA-SCBA	277 V	38 VA	1500 LUMEN LED, 4000K CCT, 85+ CRI			85+
S8OC	8" ROUND (6" LENS) SURFACE MOUNTED LED LUMINAIRE W/ PIR SENSOR; LOW PROFILE; MOUNTS IN STANDARD 4" DEEP OCTAGONAL JUNCTION BOX; PROVIDE JUNCTION BOX/HOUSING AS REQUIRED; 50,000 HOUR (L70); 5 YR WARRANTY; 0-10 DIMMING; FIELD SELECTABLE CCT (4000K)	VERSALED	SD5-6-15L-277V-MCT-OCS	277 V	15 VA	LED	1,000	4000 K	80+
SL4C	4' LED CHAIN MOUNTED LINEAR STRIPLIGHT; RUGGED ENCLOSED FULLY FROSTED ACRYLIC LENS; 303,000 HOUR (L70); 5 YR. WARRANTY; 0-10 DIMMING	METALUX	4SNLED-LD5-54SL-LW-UNV-L840-CD1-U-AYC-CHAIN/SET	277 V	62 VA	6500 LUMEN LED, 4000K CCT, 80+ CRI			80
SLF	SKYLIGHT MOUNTED LOW-PROFILE LED TAPE+CHANNEL+TILTABLE STANDS LUMINAIRE; FROSTED LENS; BEAM ANGLE 118° REMOTE DRIVER; 50,000 HOUR (L70); 5 YR. WARRANTY; 0-10 DIMMING; MOUNT IN SKYLIGHT CHANNEL INTENDED FOR LIGHT FIXTURE, ANGLE LIGHT FIXTURE OUT AND TOWARDS SKYLIGHT, COORDINATE ROUGH-IN AND REFER TO ARCHITECTURAL DETAILS ON SHEET A335; FIELD MEASURE SKYLIGHT LENGTH BEFORE ORDERING; CONTRACTOR TO PROVIDE ALL POWER SUPPLIES, CONNECTORS, FEEDS, MOUNTING HARDWARE, ETC. REQUIRED FOR A COMPLETE AND WORKING SYSTEM	ACOLYTE	TAPE CHANNEL - CHAS1-C-SV-RB-90-SWS220-6.0-40K-1-FI-TILTSTANDST+DRIVER - DRVW2428810P	277 V	6 VA	500 LUMEN/FT LED, 4.5W/FT, 4000K CCT, 80+ CRI	500	4000 K	80+
X1	UNIVERSAL EDGE-LIT EXIT SIGN; BRUSHED ALUMINUM HOUSING AND BLACK PLASTIC END-CAPS, WITH HIGH GRADE ACRYLIC PANEL; GREEN LETTERING; UNIVERSAL FACE, SINGLE, DOUBLE; UNIVERSAL MOUNTING, SURFACE, RECESSED, OR END-MOUNT; FIELD VERIFY FACE COUNTS AND MOUNTING METHODS; AC ONLY	EMERGI-LITE	PAG6	277 V	2 VA	LED			

MHTN ARCHITECTS
MHTN Architects, Inc.
280 South 400 West
Suite 250
Salt Lake City, Utah 84101
Telephone (801) 595-6700
www.mhtn.com

BNA CONSULTING
4225 Lake Park Blvd, Suite 275
West Valley City, UT 84120
P: 801.532.2196
F: 801.532.2305
www.bnaconsulting.com
SALT LAKE ST. GEORGE

JORDAN SCHOOL DISTRICT

JORDAN LEARNING CENTER

3706 WEST 9800 SOUTH
SOUTH JORDAN, UT 84009

©2023 MHTN ARCHITECTS, INC.
Confidentiality Notice:
This document is intended for use on the Project identified herein by individuals and companies involved in the design, permitting, bidding and construction of the Project. MHTN Architects, Inc. grants limited rights to distribute and reproduce this document for this express purpose only. Distribution, printing or copying this document for purposes other than those indicated is strictly prohibited. If a digital copy of this document is received in error, please delete it.

SEAL

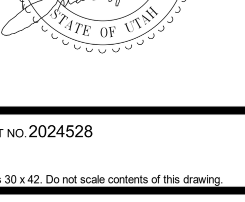

MHTN PROJECT NO. 2024528

Original drawing is 30 x 42. Do not scale contents of this drawing.

REVISIONS
CONTRACTOR TO VERIFY DRAWINGS IN FIELD USE REFLECT LAST REVISION DATE.

NO.	DATE	DESCRIPTION

ISSUE
CONSTRUCTION DOCUMENTS
AUGUST 29, 2024

SHEET NAME
ELECTRICAL SCHEDULES AND NOTES

SHEET NUMBER
E002

Autodesk Docs://2024528 JSD Retail Remodel/24133 - JSD LEARNING Center ELEC V24.rvt
8/28/2024 10:15:32 AM

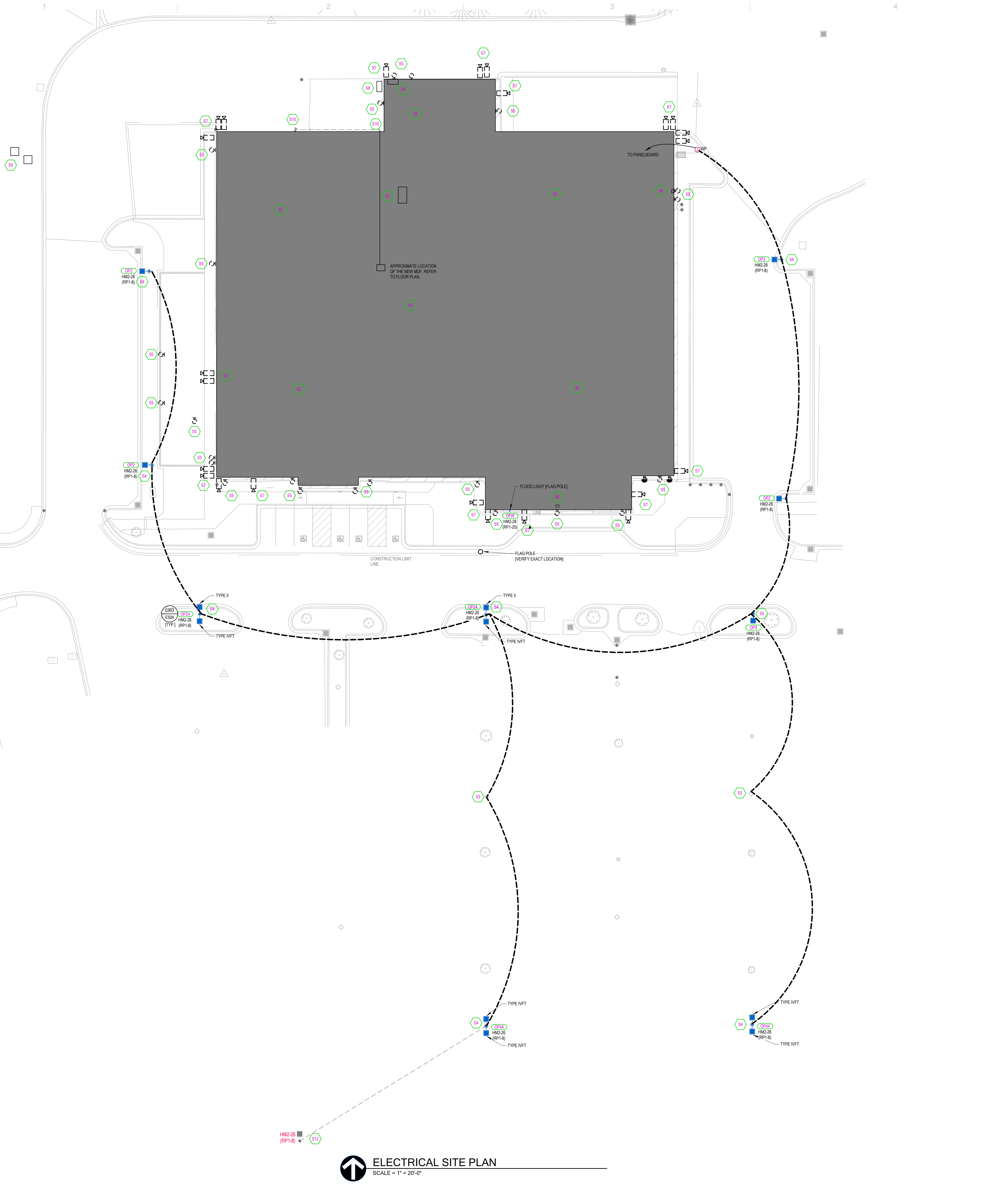

ELECTRICAL SITE PLAN
SCALE = 1" = 20'-0"

SITE DEMOLITION GENERAL NOTES

1. DIVISION 26 SHALL VISIT THE SITE PRIOR TO BIDDING. BIDS SHALL SERVE AS EVIDENCE OF KNOWLEDGE OF EXISTING CONDITIONS. BIDDERS SHALL EXAMINE THE SITE AND THE COMPLETE SET OF PLANS AND SPECIFICATIONS COVERING THE ENTIRE PROJECT. THEY SHALL BECOME FULLY CONVERSANT WITH THE TYPE OF GENERAL CONSTRUCTIONS AS WELL AS ALL PERTINENT FACTS AFFECTING THE COST OF CARRYING OUT THE WORK THEY WILL CONTRACT TO PERFORM. DIVISION 26 SHALL COORDINATE PROJECT PHASING WITH THE GENERAL CONTRACTOR AND BID AND PERFORM RESPONSIBILITIES FOR THIS PROJECT TO CONTRACT EXPECTATIONS.
2. DIVISION 26 SHALL CONFIRM EXACT LOCATION OF EXISTING AND NEW EQUIPMENT WITH OWNERS. ROUGH-IN LOCATIONS ARE DIAGRAMMATICALLY SHOWN ON THE DRAWINGS. EXISTING ELECTRICAL FIXTURES, DEVICES, EQUIPMENT, CIRCUITING AND/OR CONDITIONS ARE NOT SPECIFIED UNLESS NOTED ON DRAWINGS. FINAL ROUTING OF THE CONDUITS, CIRCUITING, AND CABLING SHALL BE DETERMINED BY THE CONTRACTOR AND CLOSELY COORDINATED WITH OWNER. ALL EXISTING CONDITIONS MUST BE VERIFIED WITHOUT EXCEPTION.
3. DIVISION 26 SHALL BLUE STAKE THE AREA OF NEW CONSTRUCTION PRIOR TO EXCAVATION FOR FOOTINGS, ETC. IDENTIFY BURIED ELECTRICAL SYSTEMS(UTILITIES, POWER, COMMUNICATIONS, ETC.) AND COORDINATE LOCATIONS WITH THE GENERAL CONTRACTOR. IF EXISTING ELECTRICAL SYSTEMS ARE DISTURBED (POWER, AUXILIARY, ETC.) E.C. SHALL MAKE NECESSARY REPAIRS (AS APPROVED BY DISTRICT REPRESENTATIVE) AS PART OF THIS CONTRACT.
4. CONTRACTOR TO CLOSELY COORDINATE ALL NEW AND EXISTING DEVICE LOCATIONS WITH CIVIL DRAWINGS. CONTRACTOR TO VERIFY ALL FINAL GRADE REQUIREMENTS WITH CIVIL DRAWINGS.
5. COORDINATE DEMOLITION AND PROJECT PHASING REQUIREMENTS WITH THE ENTIRE CONSTRUCTION SET AND GENERAL CONTRACTOR. PROVIDE SELECT DEMOLITION OF ELECTRICAL APPARATUSES IN AREAS SHOWN FOR DEMOLITION. MAKE DEMOLITION ARES SAFE AS REQUIRED. LEAVE ALL EXISTING EQUIPMENT IN PORTIONS OF THE BUILDING, SITE, AND CAMPUS NOT BEING REMODELED AND AREAS NOT YET DEMOLISHED IN WORKING.
6. DURING DEMOLITION AND NEW CONSTRUCTION, THE CONTINUATION OF BUILDING SYSTEMS MAY BE NECESSARY. TRACE AND IDENTIFY EXISTING ELECTRICAL SYSTEM (POWER, LIGHTING, FIRE ALARM AND SECURITY) WIRING IN AREAS PRIOR TO DEMOLITION. ELECTRICAL CONTRACTOR SHALL DISCONNECT ALL NECESSARY EQUIPMENT TO MAKE IT SAFE FOR DEMOLITION. WHERE LIVE CIRCUITS OR FEEDERS PASS THROUGH A REMODEL AREA, CONTRACTOR SHALL MAINTAIN ELECTRIC CONTINUITY TO AND PROTECT BRANCH CIRCUITS AND/OR FEEDERS PASSING THROUGH. WHERE FEEDERS AND/OR BRANCH CIRCUITS FEED BOTH LOADS IN AREMODELED AREA AND OUTSIDE OF A REMODELED AREA, CONTRACTOR SHALL DISCONNECT AND REMOVE PORTIONS OF THE ELECTRICAL BRANCH CIRCUITS AND/OR FEEDERS WITHIN THE REMODELED AREA AND REWORK BRANCH CIRCUITS AND/OR FEEDERS TO MAINTAIN ELECTRICAL CONTINUITY TO LOADS OUTSIDE OF THE REMODELED AREA.
7. DEVICES & EQUIPMENT TO BE DEMOLISHED SHALL BE REMOVED, INCLUDING ALL RELATED CONDUCTORS, RACEWAY, JUNCTION & SPLICE BOXES UP TO THE PANELBOARD/SWITCHBOARD. ALL CONDUITS AND BOXES THAT ARE SURFACE MOUNTED AND NO LONGER REQUIRE ACTIVE CIRCUITS SHALL BE COMPLETELY REMOVED. DEVICES TO BE REMOVED ON DRY WALL OR PLASTER TYPE WALLS THAT ARE TO REMAIN SHALL HAVE THE WALL SURFACE PATCHED TO MATCH THE EXISTING FINISH. THE CONTRACTOR SHALL IDENTIFY ALL DEMOLISHED AND ABANDONED BRANCH CIRCUITS. THESE SHALL BE NOTED AS SPARE ON PANELBOARD SCHEDULES. THIS INCLUDES IDENTIFYING EXISTING ABANDONED AND SPARE CIRCUITS THAT ARE CURRENTLY IDENTIFIED AS USED. THE CONTRACTOR SHALL FURNISH NEW TYPED DIRECTORIES FOR ALL PANELBOARDS.
8. THE OWNER HAS THE RIGHT TO RETAIN ALL SALVAGEABLE MATERIAL. ANY MATERIAL THE OWNER CHOOSES NOT TO ACCEPT SHALL BE REMOVED FROM THE SITE AND DISPOSED OF BY THE CONTRACTOR.
9. FULLY COORDINATE MECHANICAL EQUIPMENT ELECTRICAL CONNECTION REMOVAL AND RELOCATION WITH THE MECHANICAL CONTRACTOR. REFER TO ARCHITECTURAL, STRUCTURAL, MECHANICAL, PLUMBING DEMOLITION DRAWINGS FOR ADDITIONAL DEMOLITION INFORMATION.
10. CLOSELY COORDINATE ANY REQUIRED POWER SHUTDOWNS WITH GENERAL, HEAD CUSTODIAN, AND OWNER.
11. MAINTAIN EXISTING UTILITY SERVICES FOR EXISTING FACILITIES AS REQUIRED DURING THE DIFFERENT PHASES OR AS OTHERWISE NOTED. COORDINATE REQUIRED DISRUPTION OF THESE SERVICES WITH OWNER PRIOR TO DISCONNECTING. PROVIDE TEMPORARY UTILITY SERVICES TO KEEP FACILITIES IN OPERATION DURING UTILITY RELOCATION INCLUDING BUT NOT LIMITED TO FIRE WATCHES, ELECTRICAL GENERATORS, ETC.
12. ELECTRICAL UTILITY SERVICE FROM SPANISH FORK CITY POWER (SFCP) HAS BEEN GENERALLY COORDINATED AND GENERAL DIRECTION GIVEN HEREIN. DIVISION 26 RESPONSIBLE TO COMPLETELY COORDINATE THE EXACT PATHWAYS AND REQUIREMENTS WITH SFCP PRIOR TO ROUGH-IN. PROVIDE FIBERGLASS LONG RADIUS SWEEPS FOR ALL SFCP CONDUITS. COORDINATE ALL ROUGH-IN AND INSTALLATION REQUIREMENTS WITH LATEST SFCP ELECTRICAL SERVICE REQUIREMENTS AND CONTACT PERSON PROVIDED ON PLANS.
13. VERIFY ALL EQUIPMENT LOCATIONS ON AND OFF THE SITE NECESSARY FOR SERVICE CONNECTION.
14. TELCO UTILITY SERVICE FROM SPANISH FORK CITY NETWORK (SFCN) HAS BEEN GENERALLY COORDINATED AND GENERAL DIRECTION GIVEN HEREIN. DIVISION 26 RESPONSIBLE TO COMPLETELY COORDINATE THE EXACT PATHWAYS AND REQUIREMENTS WITH PROVIDERS AND OWNER PRIOR TO ROUGH-IN. PROVIDE FIBERGLASS LONG RADIUS SWEEPS FOR ALL CONDUITS. COORDINATE ALL ROUGH-IN AND INSTALLATION REQUIREMENTS WITH CONTACT PERSON PROVIDED ON PLANS. VERIFY ALL EQUIPMENT LOCATIONS ON AND OFF THE SITE NECESSARY FOR SERVICE CONNECTION.
15. TRENCHING AND BACKFILL: LOCATE AND PROTECT EXISTING UTILITIES AND OTHER UNDERGROUND WORK IN A MANNER WHICH WILL ENSURE THAT NO DAMAGE OR SERVICE INTERRUPTIONS WILL RESULT FROM EXCAVATING AND BACKFILLING. PERFORM EXCAVATION IN A MANNER WHICH PROTECTS WALLS, FOOTINGS, AND OTHER STRUCTURAL MEMBERS FROM BEING DISTURBED OR DAMAGED IN ANY WAY. BURIAL DEPTHS MUST COMPLY WITH NEC SECTION 300-5 (OR STATE OF UTAH REQUIREMENTS, WHICHEVER IS MORE STRINGENT), UNLESS NOTED OTHERWISE. PATCH AND REPAIR ROADS, PARKING AREAS, SIDEWALKS, CURBS, OTHER PAVED AREAS, PLANTING AND ANY OTHER DISTURBED AREAS CAUSED BY THE ELECTRICAL CONTRACTOR DURING CONSTRUCTION.
16. BORING, TRENCHING, ASPHALT CUTTING AND PATCH WORK BY DIVISION 26. ANY CONCRETE THAT NEEDS TO BE REMOVED TO COMPLETE WORK WILL BE THE RESPONSIBILITY OF DIVISION 26. SCHEDULING OF THE TRENCHING SHALL BE COORDINATED WITH OTHER TRADES AND APPROVED BY THE OWNER.

SHEET KEYNOTES

S1	DISCONNECT EXISTING ELECTRICAL SWITCHGEAR. AFTER THE DEMO CONTRACTOR HAS REMOVED THE GEAR REMOVE THE CONDUCTORS AND CUT THE CONDUITS OFF FLUSH.
S2	THE INTENT OF THE CONTRACT IS TO DEMOLISH ALL EXISTING ELECTRICAL INSTALLATION. EXISTING RACEWAYS MAY BE REUSED IF THEY MEET THE INTENT OF THE SPECIFICATIONS. COORDINATE WITH THE DEMOLITION CONTRACTOR TO PRESERVE ANY DESIRED RACEWAYS.
S3	AFTER LIGHT POLE BASE IS DELETED EXTEND AND PATCH THE EXISTING CONDUITS AS NECESSARY TO MAINTAIN THE CONDUIT RUNS FOR NEW CIRCUITING.
S4	PROVIDE A NEW LIGHT POLE, FIXTURE AND BASE IN APPROXIMATELY THE SAME LOCATION AS THE EXISTING AND EXTEND THE CONDUIT INTO THE POLE BASE AS REQUIRED. PROVIDE NEW CIRCUITS AS INDICATED.
S5	REMOVE EXISTING EXTERIOR LIGHT FIXTURE.
S6	REMOVE EXTERIOR LIGHT EMERGENCY BATTERY PACK.
S7	REMOVE EXISTING EXTERIOR CAMERA.
S8	DISCONNECT AND REMOVE EXISTING ELECTRICAL SERVICE ENTRANCE METERING AND MAIN SWITCH. COORDINATE AS REQUIRED WITH ROCKY MOUNTAIN POWER FOR ALL REQUIREMENTS. MAINTAIN EXISTING TRANSFORMER.
S9	MAINTAIN EXISTING COMMUNICATIONS GROUND BOXES.
S10	LOCATE THE LOCATION OF THE EXISTING 4" CONDUIT RUN FROM THE COMMUNICATIONS BOXES INTO THE BUILDING. EXTEND 4" CONDUIT TO THE NEW LOCATION AND RISE UP THE EXTERIOR WALL AND STUB INTO THE CEILING SPACE. CONTINUE 4" CONDUIT TO THE MDF ROOM FOR COMMUNICATIONS SERVICE. PROVIDE A NEW PULL STRING FROM THE COMMUNICATIONS BOXES, VERIFY THE CORRECT BOX, TO THE MDF ROOM.
S12	MAINTAIN EXISTING LIGHT POLE AT THE CORNER OF THE PROPERTY (VERIFY EXACT LOCATION). RUN NEW CONDUIT AND WIRE AS REQUIRED FROM THE NEW POLE LOCATION AND RECONNECT AS REQUIRED TO MAINTAIN POWER TO THE EXISTING POLE.

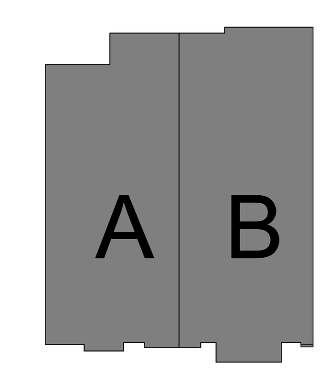

KEY PLAN

MHTN ARCHITECTS

MHTN Architects, Inc.
280 South 400 West
Suite 250
Salt Lake City, Utah 84101
Telephone (801) 595-6700
www.mhtn.com

BNA CONSULTING
4225 Lake Park Blvd, Suite 275
West Valley City, UT 84120
P: 801.532.2196
F: 801.532.2305
www.bnaconsulting.com
SALT LAKE ST. GEORGE

JORDAN SCHOOL DISTRICT

JORDAN LEARNING CENTER

3706 WEST 9800 SOUTH
SOUTH JORDAN, UT 84009

©2023 MHTN ARCHITECTS, INC.
Confidentiality Notice:
This document is intended for use on the Project identified herein by individuals and companies involved in the design, permitting, bidding and construction of the Project. MHTN Architects, Inc. grants limited rights to distribute and reproduce this document for this express purpose only. Distribution, printing or copying this document for purposes other than those indicated is strictly prohibited. If a digital copy of this document is received in error, please delete it.

SEAL

PROFESSIONAL ENGINEER 8/29/2024 BRIAN HICKS No. 7709037-2202 STATE OF UTAH

MHTN PROJECT NO. 2024528

Original drawing is 30 x 42. Do not scale contents of this drawing.

REVISIONS
CONTRACTOR TO VERIFY DRAWINGS IN FIELD USE REFLECT LAST REVISION DATE.

NO. △	DATE	DESCRIPTION

ISSUE
CONSTRUCTION DOCUMENTS
AUGUST 29, 2024

SHEET NAME
ELECTRICAL SITE PLAN

SHEET NUMBER
E101

Autodesk Docs://2024528 JSD Retail Remodel/24133 - JSD LEARNING Center ELEC V24.rvt
8/28/2024 10:15:34 AM

LIGHTING GENERAL SHEET NOTES

1. DEVICE HEIGHTS SHOWN FOR REFERENCE ONLY. CONTRACTOR TO VERIFY ALL ROUGH- IN ELEVATION HEIGHTS WITH MILLWORK SHOP DRAWINGS PRIOR TO ROUGH-IN. ROUGH- IN DEVICES 6" ABOVE DESKTOPS, COUNTERS, ETC.
2. REFER TO ARCHITECTURAL REFLECTED CEILING PLANS FOR ALL FIXTURE LOCATIONS WITHIN A CEILING OR CEILING GRID. FOR AREAS WITHOUT CEILINGS, FIXTURE LOCATIONS ARE DIAGRAMMATIC. THE INTENT IS TO ALIGN, CENTER, OR SPACE FIXTURES BETWEEN ARCHITECTURAL AND STRUCTURAL ELEMENTS. CONTRACTOR TO PAINT EXPOSED RACEWAY TO MATCH ADJACENT SURFACES.
3. FIELD VERIFY EXACT FIXTURE LENGTHS FOR CONTINUOUS ILLUMINATION FOR COVES AND LINEAR RUNS. PROVIDE CONTINUOUS ILLUMINATION WITH NO MORE THAN A 1" GAP BETWEEN THE END OF THE EDGE OF THE WALL/CEILING AND THE FIXTURE.
4. ELECTRICAL CONTRACTOR TO COORDINATE WITH MECHANICAL CONTRACTOR FOR PLACEMENT OF FIXTURES WITHIN MECHANICAL ROOMS.
5. ALL ROOM CONTROLLERS AND/OR POWER PACKS SHALL BE INSTALLED IN THE CEILING SPACE DIRECTLY ABOVE THE ENTRY DOOR TO THE SPACE IT IS CONTROLLING.
6. ALL COVE AND SKYLIGHTS MUST BE COORDINATED WITH ARCHITECTURAL DETAILS AND GC FOR EXACT LENGTHS.
7. PROVIDE UNSWITCHED NORMAL CIRCUIT HOT LEG TO ALL EMERGENCY POWER CONTROL DEVICES FOR PROPER POWER SENSING.
8. PROVIDE UNSWITCHED HOT AHEAD OF RELAY, OCCUPANCY SENSOR, OR SWITCH TO ALL EXIT SIGNS.
9. IF SHOWN, SUBSCRIPT NEAR LIGHT FIXTURES INDICATES CONTROL INTENT. PROVIDE LIGHTING CONTROLLERS WITH THE REQUIRED NUMBER OF RELAYS/DIMMERS. PROVIDE ADDITIONAL RELAYS/DIMMERS FOR DAYLIGHT ZONES AS NEEDED.
10. PROVIDE 0-10V DIMMER CONDUCTORS FOR ALL AREAS AND/OR ROOMS WHERE 0-10V DIMMING IS INDICATED BY THE RELAY PANEL SCHEDULE, WALL STATION CONTROL SEQUENCE., OR REQUIRED BY IECC 2021.
11. ALL 277V LIGHTING CIRCUITS TERMINATING AT LIGHTING CONTROL PANELS SHALL HAVE A MINIMUM LENGTH OF 20 FEET BETWEEN LIGHTING CONTROL PANEL AND BRANCH LIGHTING PANEL.
12. CAREFULLY COORDINATE FIXTURE PLACEMENT WITHIN BAFFLED CEILINGS. PENDANT MOUNTED FIXTURE SHALL BE MOUNTED AT THE SAME ELEVATION AS BAFFLES. COORDINATE WITH ARCHITECTURAL RCP AND DETAILS PRIOR TO ROUGH-IN.
13. PROVIDE CONDUIT FROM DEVICE TO DEVICE IN OPEN AND/OR EXPOSED CEILINGS. CEILINGS WITH CLOUDS ARE CONSIDERED OPEN/EXPOSED CEILING. NO EXPOSED CABLES SHALL BE SEEN FROM BELOW.
14. CAREFULLY COORDINATE FIXTURE PLACEMENT WITHIN BAFFLED CEILINGS. PENDANT MOUNTED FIXTURES SHALL BE MOUNTED AT THE SAME ELEVATION AS BAFFLES. COORDINATE WITH ARCHITECTURAL RCP AND DETAILS PRIOR TO ROUGH-IN.
15. PROVIDE EXTENDED RANGE DUAL TECH. OCCUPANCY SENSOR(S) AS SHOWN THROUGHOUT CORRIDORS. PROVIDE 0-10V DIMMING ON ALL CORRIDOR LIGHTING RELAYS. OCCUPANCY SENSOR SHALL DIM CORRIDOR RELAY TO 50% OUTPUT AFTER 15 MINUTES OF INACTIVITY. LOCATE OCCUPANCY SENSOR SENSOR(S) PER MANUFACTURER FOR PROPER PLACEMENT AND ADJUSTMENT OF OCCUPANCY SENSORS.
16. MANUFACTURER'S REPRESENTATIVE FOR DIVISION 26 LIGHTING CONTROLS SHALL BE ACCOUNTABLE FOR THE COMPREHENSIVE LIGHTING CONTROLS PACKAGE'S FINALIZATION IN ALIGNMENT WITH THE DESIGN INTENT DEPICTED IN THE DRAWINGS AND SPECIFICATIONS AND COMPLYING WITH IECC 2021 REQUIREMENTS. THE LIGHTING REPRESENTATIVE IS REQUIRED TO DEVELOP DETAILED SHOP DRAWINGS DEMONSTRATING THE LIGHTING CONTROL SYSTEM'S TOPOLOGY AND THE ESSENTIAL CONNECTIONS NECESSARY FOR ITS PROPER FUNCTIONING. LIGHTING CONTROL DEVICES SHOWN ARE TO PROVIDE GENERAL INTENT ONLY. MANUFACTURER'S REPRESENTATIVE TO PROVIDE ALL ADDITIONAL DEVICES AND MODIFY DEVICE LOCATIONS AS REQUIRED TO MEET IECC 2021 REQUIREMENTS..

SHEET KEYNOTES

L1 MOUNT FIXTURE WITHIN SKYLIGHT CHANNEL WITH FIXTURES ANGLED TO MATCH ANGLE OF SKYLIGHT OPENING. REMOTE DRIVER ABOVE ACCESSIBLE CEILING AS INDICATED. EACH SKYLIGHT HAS A UNIQUE CONSTRUCTION. COORDINATE WITH ARCHITECTURAL SKYLIGHT DETAILS ON A335 FOR MORE INFORMATION. PROVIDE DAYLIGHT ZONE CONTROL REQUIREMENTS PER IECC. LOCATE DAYLIGHT SENSOR(S) PER MANUFACTURER'S RECOMMENDATION AND WHERE REQUIRED WITHIN THE SPACE FOR PROPER COVERAGE. CONTROL LIGHT FIXTURES WITHIN THE DAYLIGHT ZONE WITH DAYLIGHT SENSOR (PHOTODIODE) AND WIRE THE FIXTURES 0-10V DRIVERS ACCORDINGLY.

L2 MOUNT FIXTURES BETWEEN BAFFLES. MATCH BAFFLE HEIGHT.

L3 PROVIDE >7" LIGHTING TOUCH PANEL THAT IS TIED TO THE BUILDING LIGHTING RELAY PANELS THROUGHOUT THE BUILDING. PROVIDE EASY-TO-USE GUI INTERFACE. PROGRAM GUI WITH PAGES TO CONTROL AND OVERRIDE BUILDING RELAYS E.G. EXTERIOR, PARKING, CORRIDORS, ETC. RECEIVE SIGN-OFF ON SETUP AND OVERALL FUNCTIONALITY.

L6 FIELD VERIFY FIXTURE ELEVATION AND LOCATION WITH ARCHITECT PRIOR TO ROUGH-IN.

L7 PROVIDE A 48-CIRCUIT LIGHTING CONTROL PANEL RELAY WITH 120/277V/1-POLE 0-10V DIMMING RELAYS. LIGHTING CONTROL PANEL MUST HAVE BUILT-IN TIME SCHEDULING, PHOTOCELL 0-10V DIMMING, ASTRONOMICAL CLOCK, 7-DAY SCHEDULE WITH HOLIDAYS, AND PROTECTION FOR LOSS OF POWER TO PREVENT LOSS OF SCHEDULE. PROVIDE CONTROL CIRCUIT AS INDICATED. ADDITIONALLY, LOCATE PHOTOCELL ON THE NORTH SIDE OF THE BUILDING AND TIE INTO THE CONTROLLER. PROGRAM AND CREATE SCHEDULES PER THE LIGHTING NARRATIVE AND THE OWNER'S REQUIREMENTS.

L8 PROVIDE >7" LIGHTING TOUCH PANEL THAT IS TIED TO THE BUILDING LIGHTING RELAY PANELS THROUGHOUT THE CDC PORTION OF THE BUILDING. PROVIDE EASY-TO-USE GUI INTERFACE. PROGRAM GUI WITH PAGES TO CONTROL AND OVERRIDE BUILDING RELAYS E.G. EXTERIOR, PARKING, CORRIDORS, ETC. RECEIVE SIGN-OFF ON SETUP AND OVERALL FUNCTIONALITY.

FIRST FLOOR LIGHTING PLAN AREA A
SCALE = 1/8" = 1'-0"

KEY PLAN

MHTN ARCHITECTS
MHTN Architects, Inc.
280 South 400 West
Suite 250
Salt Lake City, Utah 84101
Telephone (801) 595-6700
www.mhtn.com

BNA CONSULTING
4225 Lake Park Blvd, Suite 275
West Valley City, UT 84120
P: 801.532.2196
F: 801.532.2305
www.bnaconsulting.com

JORDAN SCHOOL DISTRICT

JORDAN LEARNING CENTER

3706 WEST 9800 SOUTH
SOUTH JORDAN, UT 84009

©2023 MHTN ARCHITECTS, INC.
Confidentiality Notice:
This document is intended for use on the Project identified herein by individuals and companies involved in the design, permitting, bidding and construction of the Project. MHTN Architects, Inc. grants limited rights to distribute and reproduce this document for this express purpose only. Distribution, printing or copying this document for purposes other than those indicated is strictly prohibited. If a digital copy of this document is received in error, please delete it.

SEAL

PROFESSIONAL ENGINEER
BRIAN HICKS
No. 7199007
STATE OF UTAH

MHTN PROJECT NO. 2024528

Original drawing is 30 x 42. Do not scale contents of this drawing.

REVISIONS
CONTRACTOR TO VERIFY DRAWINGS IN FIELD USE REFLECT LAST REVISION DATE.

NO.	DATE	DESCRIPTION

ISSUE
CONSTRUCTION DOCUMENTS
AUGUST 29, 2024

SHEET NAME
FIRST FLOOR LIGHTING PLAN AREA A

SHEET NUMBER
E211A

Autodesk Docs://2024528 JSD Retail Remodel/24133 - JSD_LEARNING Center ELEC V24.rvt
9/28/2024 10:13:40 AM

FIRST FLOOR LIGHTING PLAN AREA B
SCALE = 1/8" = 1'-0"

LIGHTING GENERAL SHEET NOTES

1. DEVICE HEIGHTS SHOWN FOR REFERENCE ONLY. CONTRACTOR TO VERIFY ALL ROUGH- IN ELEVATION HEIGHTS WITH MILLWORK SHOP DRAWINGS PRIOR TO ROUGH-IN. ROUGH- IN DEVICES 6" ABOVE DESKTOPS, COUNTERS, ETC.
2. REFER TO ARCHITECTURAL REFLECTED CEILING PLANS FOR ALL FIXTURE LOCATIONS WITHIN A CEILING OR CEILING GRID. FOR AREAS WITHOUT CEILINGS, FIXTURE LOCATIONS ARE DIAGRAMMATIC. THE INTENT IS TO ALIGN, CENTER, OR SPACE FIXTURES BETWEEN ARCHITECTURAL AND STRUCTURAL ELEMENTS. CONTRACTOR TO PAINT EXPOSED RACEWAY TO MATCH ADJACENT SURFACES.
3. FIELD VERIFY EXACT FIXTURE LENGTHS FOR CONTINUOUS ILLUMINATION FOR COVES AND LINEAR RUNS. PROVIDE CONTINUOUS ILLUMINATION WITH NO MORE THAN A 1" GAP BETWEEN THE END OF THE EDGE OF THE WALL/CEILING AND THE FIXTURE.
4. ELECTRICAL CONTRACTOR TO COORDINATE WITH MECHANICAL CONTRACTOR FOR PLACEMENT OF FIXTURES WITHIN MECHANICAL ROOMS.
5. ALL ROOM CONTROLLERS AND/OR POWER PACKS SHALL BE INSTALLED IN THE CEILING SPACE DIRECTLY ABOVE THE ENTRY DOOR TO THE SPACE IT IS CONTROLLING.
6. ALL COVE AND SKYLIGHTS MUST BE COORDINATED WITH ARCHITECTURAL DETAILS AND GC FOR EXACT LENGTHS.
7. PROVIDE UNSWITCHED NORMAL CIRCUIT HOT LEG TO ALL EMERGENCY POWER CONTROL DEVICES FOR PROPER POWER SENSING.
8. PROVIDE UNSWITCHED HOT AHEAD OF RELAY, OCCUPANCY SENSOR, OR SWITCH TO ALL EXIT SIGNS.
9. IF SHOWN, SUBSCRIPT NEAR LIGHT FIXTURES INDICATES CONTROL INTENT. PROVIDE LIGHTING CONTROLLERS WITH THE REQUIRED NUMBER OF RELAYS/DIMMERS. PROVIDE ADDITIONAL RELAYS/DIMMERS FOR DAYLIGHT ZONES AS NEEDED.
10. PROVIDE 0-10V DIMMER CONDUCTORS FOR ALL AREAS AND/OR ROOMS WHERE 0-10V DIMMING IS INDICATED BY THE RELAY PANEL SCHEDULE, WALL STATION CONTROL SEQUENCE., OR REQUIRED BY IECC 2021.
11. ALL 277V LIGHTING CIRCUITS TERMINATING AT LIGHTING CONTROL PANELS SHALL HAVE A MINIMUM LENGTH OF 20 FEET BETWEEN LIGHTING CONTROL PANEL AND BRANCH LIGHTING PANEL.
12. CAREFULLY COORDINATE FIXTURE PLACEMENT WITHIN BAFFLED CEILINGS. PENDANT MOUNTED FIXTURE SHALL BE MOUNTED AT THE SAME ELEVATION AS BAFFLES. COORDINATE WITH ARCHITECTURAL RCP AND DETAILS PRIOR TO ROUGH-IN.
13. PROVIDE CONDUIT FROM DEVICE TO DEVICE IN OPEN AND/OR EXPOSED CEILINGS. CEILINGS WITH CLOUDS ARE CONSIDERED OPEN/EXPOSED CEILING. NO EXPOSED CABLES SHALL BE SEEN FROM BELOW.
14. CAREFULLY COORDINATE FIXTURE PLACEMENT WITHIN BAFFLED CEILINGS. PENDANT MOUNTED FIXTURES SHALL BE MOUNTED AT THE SAME ELEVATION AS BAFFLES. COORDINATE WITH ARCHITECTURAL RCP AND DETAILS PRIOR TO ROUGH-IN.
15. PROVIDE EXTENDED RANGE DUAL TECH. OCCUPANCY SENSOR(S) AS SHOWN THROUGHOUT CORRIDORS. PROVIDE 0-10V DIMMING ON ALL CORRIDOR LIGHTING RELAYS. OCCUPANCY SENSOR SHALL DIM CORRIDOR RELAY TO 50% OUTPUT AFTER 15 MINUTES OF INACTIVITY. LOCATE OCCUPANCY SENSOR SENSOR(S) PER MANUFACTURER FOR PROPER PLACEMENT AND ADJUSTMENT OF OCCUPANCY SENSORS.
16. MANUFACTURER'S REPRESENTATIVE FOR DIVISION 26 LIGHTING CONTROLS SHALL BE ACCOUNTABLE FOR THE COMPREHENSIVE LIGHTING CONTROLS PACKAGE'S FINALIZATION IN ALIGNMENT WITH THE DESIGN INTENT DEPICTED IN THE DRAWINGS AND SPECIFICATIONS AND COMPLYING WITH IECC 2021 REQUIREMENTS. THE LIGHTING REPRESENTATIVE IS REQUIRED TO DEVELOP DETAILED SHOP DRAWINGS DEMONSTRATING THE LIGHTING CONTROL SYSTEM'S TOPOLOGY AND THE ESSENTIAL CONNECTIONS NECESSARY FOR ITS PROPER FUNCTIONING. LIGHTING CONTROL DEVICES SHOWN ARE TO PROVIDE GENERAL INTENT ONLY. MANUFACTURE'S REPRESENTATIVE TO PROVIDE ALL ADDITIONAL DEVICES AND MODIFY DEVICE LOCATIONS AS REQUIRED TO MEET IECC 2021 REQUIREMENTS..

SHEET KEYNOTES

L1	MOUNT FIXTURE WITHIN SKYLIGHT CHANNEL WITH FIXTURES ANGLED TO MATCH ANGLE OF SKYLIGHT OPENING. REMOTE DRIVER ABOVE ACCESSIBLE CEILING AS INDICATED. EACH SKYLIGHT HAS A UNIQUE CONSTRUCTION. COORDINATE WITH ARCHITECTURAL SKYLIGHT DETAILS ON A335 FOR MORE INFORMATION. PROVIDE DAYLIGHT ZONE CONTROL REQUIREMENTS PER IECC. LOCATE DAYLIGHT SENSOR(S) PER MANUFACTURER'S RECOMMENDATION AND WHERE REQUIRED WITHIN THE SPACE FOR PROPER COVERAGE. CONTROL LIGHT FIXTURES WITHIN THE DAYLIGHT ZONE WITH DAYLIGHT SENSOR (PHOTODIODE) AND WIRE THE FIXTURES 0-10V DRIVERS ACCORDINGLY.
L2	MOUNT FIXTURES BETWEEN BAFFLES. MATCH BAFFLE HEIGHT.
L4	MOUNT CONTINUOUS RECESSED LINEAR DIFFUSED LED FIXTURE WITHIN EXTERIOR ARCHITECTURAL CEILING STRUCTURE. COORDINATE OPENING AND MOUNTING REQUIREMENTS WITH GC, ARCHITECTURAL DRAWINGS AND CEILING DETAILS. LIGHT FIXTURE SHALL BE CONTINUOUS THROUGHOUT. FIELD VERIFY LENGTH AND PROVIDE CONTINUOUS CHANNEL AND CORNERS AS REQUIRED FOR UNINTERRUPTED LIGHT ALONG THE ENTIRE PATH. PROVIDE 0-10V WIRING AND LOCATE REMOTE 0-10V POWER SUPPLY(S) IN PLENUM RATED BOX AND IN NEARBY ACCESSIBLE CEILING. COORDINATE QUANTITY AND TYPES WITH MANUFACTURER, LABEL CABINETS AND LOCATE EQUIPMENT FOR EASY MAINTENANCE. LIGHT FIXTURE INTENSITY TO BE EVALUATED BY ARCHITECT AND ENGINEER. ADJUSTMENTS SHALL BE MADE AS REQUIRED.
L6	FIELD VERIFY FIXTURE ELEVATION AND LOCATION WITH ARCHITECT PRIOR TO ROUGH-IN.
L9	PROVIDE >7" LIGHTING TOUCH PANEL THAT IS TIED TO THE BUILDING LIGHTING RELAY PANELS THROUGHOUT THE VIRTUAL LEARNING PORTION OF THE BUILDING. PROVIDE EASY-TO-USE GUI INTERFACE. PROGRAM GUI WITH PAGES TO CONTROL AND OVERRIDE BUILDING RELAYS E.G. EXTERIOR, PARKING, CORRIDORS, ETC. RECEIVE SIGN-OFF ON SETUP AND OVERALL FUNCTIONALITY.

MHTN ARCHITECTS
MHTN Architects, Inc.
280 South 400 West
Suite 250
Salt Lake City, Utah 84101
Telephone (801) 595-6700
www.mhtn.com

BNA CONSULTING
4225 Lake Park Blvd, Suite 275
West Valley City, UT 84120
P: 801.532.2196
F: 801.532.2305
www.bnaconsulting.com

JORDAN SCHOOL DISTRICT

JORDAN LEARNING CENTER

3706 WEST 9800 SOUTH
SOUTH JORDAN, UT 84095

©2023 MHTN ARCHITECTS, INC.
Confidentiality Notice:
This document is intended for use on the Project identified herein by individuals and companies involved in the design, permitting, bidding and construction of the Project. MHTN Architects, Inc. grants limited rights to distribute and reproduce this document for this express purpose only. Distribution, printing or copying this document for purposes other than those indicated is strictly prohibited. If a digital copy of this document is received in error, please delete it.

SEAL

PROFESSIONAL ENGINEER
BRIAN HICKS
No. 7709025-5501
STATE OF UTAH
5/31/2024

MHTN PROJECT NO. 2024528

Original drawing is 30 x 42. Do not scale contents of this drawing.

REVISIONS
CONTRACTOR TO VERIFY DRAWINGS IN FIELD USE REFLECT LAST REVISION DATE:

NO.	DATE	DESCRIPTION

ISSUE
CONSTRUCTION DOCUMENTS
AUGUST 29, 2024

SHEET NAME
FIRST FLOOR LIGHTING PLAN AREA B

SHEET NUMBER
E211B

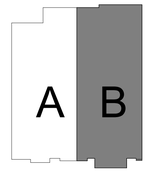

KEY PLAN

Autodesk Docs://2024528 JSD Retail Remodel/24133 - JSD LEARNING Center ELEC V24.rvt
8/28/2024 10:15:43 AM

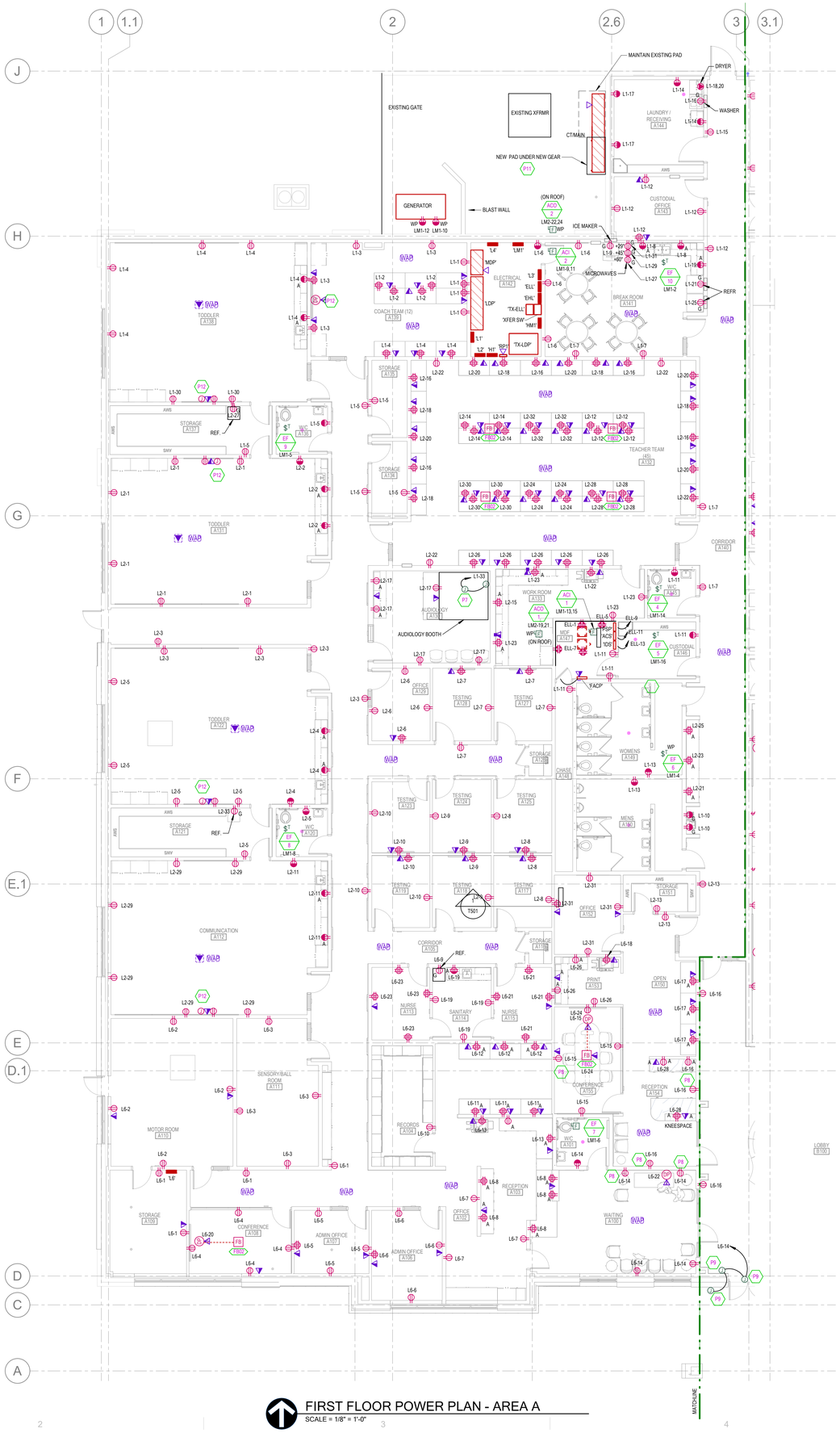

FIRST FLOOR POWER PLAN - AREA A
SCALE = 1/8" = 1'-0"

GENERAL POWER SHEET NOTES

1. COORDINATE PLACEMENT OF ELECTRICAL DEVICES WITH ARCHITECT PRIOR TO ROUGH-IN. WHERE DEVICES ARE SHOWN IN SAME WALL SPACE, ALIGN VERTICALLY AND HORIZONTALLY. COORDINATE WITH ARCHITECTURAL DRAWINGS, ATHLETIC SAFETY WALL PADDING AND CABINETRY DRAWINGS.
2. ALL THE LOW VOLTAGE WIRE/CABLE FOR LIGHTING SENSORS, AUDIO/VISUAL EQUIPMENT, SOUND AMPLIFICATION, ETC. TO BE ROUTED THROUGH CONDUIT IN EXPOSED AND CLOUDED CEILING AREAS.
3. ALL LOW VOLTAGE WIRE/CABLE FOR LIGHTING SENSORS, AUDIO/VISUAL EQUIPMENT, CLASSROOM SOUND AMPLIFICATION, ETC. TO BE PROPERLY SUPPORTED PER THE TELE/DATA SPEC. AND AT 5'-0" INTERVALS AND TO FOLLOW BUILDING STRUCTURAL LINES. PULLING WIRE DIAGONALLY ACROSS ROOMS IS NOT ALLOWED. USING CEILING SYSTEM OR LIGHT FIXTURE SUPPORT/SEISMIC WIRES FOR SUPPORT IS NOT ALLOWED.
4. PROVIDE GFCI PROTECTION ON ALL DEVICES AND EQUIPMENT PER THE NEC REQUIREMENTS. DEVICES SHALL BE READILY ACCESSIBLE. IF ANY OUTLET IS INSTALLED WITHIN 6 FEET OF OUTSIDE EDGE OF SINK, CONTRACTOR SHALL PROVIDE GFCI RECEPTACLE PER NEC, WHETHER SHOWN OR NOT.
5. ALL RECEPTACLES LOCATED THROUGHOUT THE BUILDING SHALL BE TAMPER RESISTANT PER NEC 406.12.
6. ELECTRICAL CONTRACTOR SHALL COORDINATE EXACT LOCATION OF ALL MECHANICAL UNITS WITH MECHANICAL CONTRACTOR. CIRCUITS TO ALL MECHANICAL EQUIPMENT SHALL BE DEDICATED UNLESS NOTED OTHERWISE.
7. FOR VAV POWER, PROVIDE A DEDICATED 120V/20A CIRCUIT FROM A PANEL LOCATED IN THE ELECTRICAL ROOM OF THE ASSOCIATED QUADRANT. COORDINATE EXACT LOCATION OF ALL VAV BOXES WITH MECHANICAL CONTRACTOR PRIOR TO ROUGH-IN.
8. PROVIDE 120V CIRCUIT FROM NEAREST PROVIDED CIRCUIT FOR FIRE/SMOKE DAMPER RELAYS. PROVIDE FIRE ALARM MODULES AND RELAYS AS NECESSARY FOR ALL FIRE/SMOKE DAMPERS SHOWN ON DIVISION 23 DRAWINGS. ALL FIRE/SMOKE DAMPERS SHALL HAVE A MANUAL OVERRIDE SWITCH. PROVIDE DUCT DETECTOR WITHIN 5 FEET OF EACH FIRE/SMOKE DAMPER.
9. CONTRACTOR TO COORDINATE ALL LOCATIONS OF FIRE/SMOKE AND SMOKE DAMPERS WITH MECHANICAL CONTRACTOR. CONTRACTOR TO PROVIDE POWER, MONITOR MODULES, AND RELAYS AS REQUIRED FOR A COMPLETE SYSTEM.
10. DIVISION-26 IS RESPONSIBLE TO PROVIDE CONDUIT AND ROUGH-IN FOR ALL THERMOSTAT CONTROLS LOCATED WITHIN WALLS. COORDINATE WITH THE CONTROLS CONTRACTOR AND VERIFY EXACT LOCATION OF ALL THERMOSTATS.

SHEET KEYNOTES

P7	VERIFY EXACT LOCATION OF TERMINATION FOR THE AUDIOLOGY BOOTH. FEED FROM THE WALL WITH FLEX CONDUIT.
P8	COORDINATE EXACT PLACEMENT OF THE RECEPTACLE IN THE FEATURE WALL WITH THE ARCHITECT.
P9	VERIFY BOX LOCATIONS AND ALL TERMINATION REQUIREMENTS FOR CONNECTION TO THE ADA FUNCTION OF THE DOOR.
P11	DRILL AND DOWEL THE NEW PAD TO THE EXISTING PAD.
P12	LOCATE POWER, DATA, AND JUNCTION BOX FOR AV CABLING AT WALL MOUNTED PROJECTOR MOUNT. COORDINATE ROUGH-IN LOCATION CLOSELY WITH AV SUBCONTRACTOR.

MHTN ARCHITECTS
MHTN Architects, Inc.
280 South 400 West
Suite 250
Salt Lake City, Utah 84101
Telephone (801) 595-6700
www.mhtn.com

BNA CONSULTING
4225 Lake Park Blvd, Suite 275
West Valley City, UT 84120
P: 801.532.2196
F: 801.532.2305
www.bnaconsulting.com

JORDAN SCHOOL DISTRICT

JORDAN LEARNING CENTER

3706 WEST 9800 SOUTH
SOUTH JORDAN, UT 84009

©2023 MHTN ARCHITECTS, INC.
Confidentiality Notice
This document is intended for use on the Project identified herein by individuals and companies involved in the design, permitting, bidding and construction of the Project. MHTN Architects, Inc. grants limited rights to distribute and reproduce this document for such purposes. Any other distribution, copying or reproduction of this document for purposes other than those indicated is strictly prohibited. If a digital copy of this document is received in error, please delete it.

SEAL

PROFESSIONAL ENGINEER
8/29/2024
BRIAN HICKS
No. 7709857-2202
STATE OF UTAH

MHTN PROJECT NO. 2024528

Original drawing is 30 x 42. Do not scale contents of this drawing.

REVISIONS
CONTRACTOR TO VERIFY DRAWINGS IN FIELD USE REFLECT LAST REVISION DATE.

NO.	DATE	DESCRIPTION

ISSUE
CONSTRUCTION DOCUMENTS
AUGUST 29, 2024

SHEET NAME
FIRST FLOOR POWER PLAN - AREA A

SHEET NUMBER
E311A

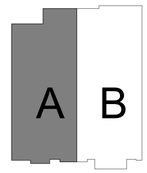

KEY PLAN

Autodesk Docs://2024528 JSD Retail Remodel/24133 - JSD LEARNING Center ELEC V24.rvt
8/28/2024 10:13:54 AM

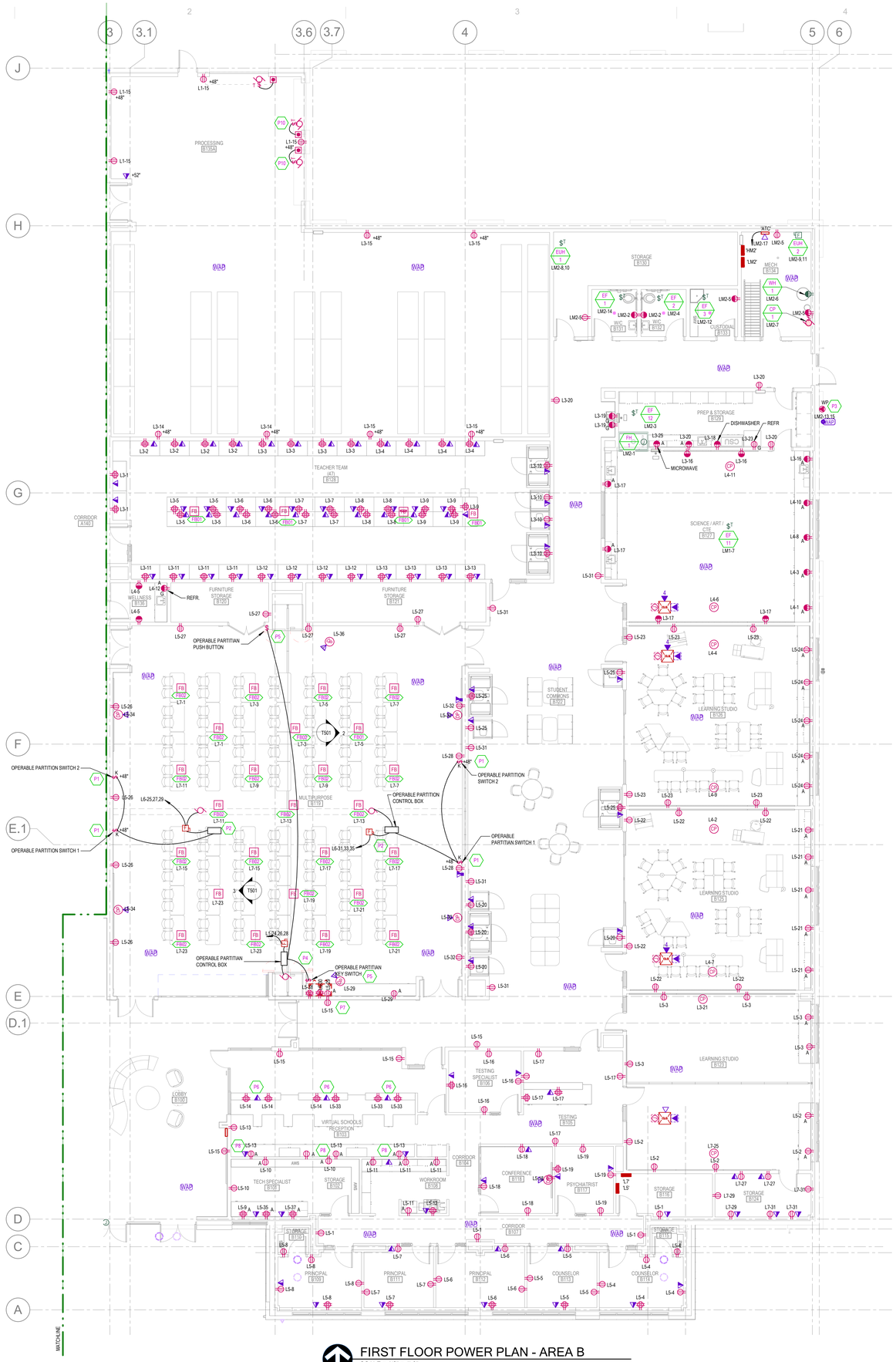

FIRST FLOOR POWER PLAN - AREA B
SCALE = 1/8" = 1'-0"

GENERAL POWER SHEET NOTES

1. COORDINATE PLACEMENT OF ELECTRICAL DEVICES WITH ARCHITECT PRIOR TO ROUGH-IN. WHERE DEVICES ARE SHOWN IN SAME WALL SPACE, ALIGN VERTICALLY AND HORIZONTALLY. COORDINATE WITH ARCHITECTURAL DRAWINGS, ATHLETIC SAFETY WALL PADDING AND CABINETRY DRAWINGS.
2. ALL THE LOW VOLTAGE WIRE/CABLE FOR LIGHTING SENSORS, AUDIO/VISUAL EQUIPMENT, SOUND AMPLIFICATION, ETC. TO BE ROUTED THROUGH CONDUIT IN EXPOSED AND CLOUDED CEILING AREAS.
3. ALL LOW VOLTAGE WIRE/CABLE FOR LIGHTING SENSORS, AUDIO/VISUAL EQUIPMENT, CLASSROOM SOUND AMPLIFICATION, ETC. TO BE PROPERLY SUPPORTED PER THE TELE/DATA SPEC. AND AT 5'-0" INTERVALS AND TO FOLLOW BUILDING STRUCTURAL LINES. PULLING WIRE DIAGONALLY ACROSS ROOMS IS NOT ALLOWED. USING CEILING SYSTEM OR LIGHT FIXTURE SUPPORT/SEISMIC WIRES FOR SUPPORT IS NOT ALLOWED.
4. PROVIDE GFCI PROTECTION ON ALL DEVICES AND EQUIPMENT PER THE NEC REQUIREMENTS. DEVICES SHALL BE READILY ACCESSIBLE. IF ANY OUTLET IS INSTALLED WITHIN 6 FEET OF OUTSIDE EDGE OF SINK, CONTRACTOR SHALL PROVIDE GFCI RECEPTACLE PER NEC, WHETHER SHOWN OR NOT.
5. ALL RECEPTACLES LOCATED THROUGHOUT THE BUILDING SHALL BE TAMPER RESISTANT PER NEC 406.12.
6. ELECTRICAL CONTRACTOR SHALL COORDINATE EXACT LOCATION OF ALL MECHANICAL UNITS WITH MECHANICAL CONTRACTOR. CIRCUITS TO ALL MECHANICAL EQUIPMENT SHALL BE DEDICATED UNLESS NOTED OTHERWISE.
7. FOR VAV POWER, PROVIDE A DEDICATED 120V/20A CIRCUIT FROM A PANEL LOCATED IN THE ELECTRICAL ROOM OF THE ASSOCIATED QUADRANT. COORDINATE EXACT LOCATION OF ALL VAV BOXES WITH MECHANICAL CONTRACTOR PRIOR TO ROUGH-IN.
8. PROVIDE 120V CIRCUIT FROM NEAREST PROVIDED CIRCUIT FOR FIRE/SMOKE DAMPER RELAYS. PROVIDE FIRE ALARM MODULES AND RELAYS AS NECESSARY FOR ALL FIRE/SMOKE DAMPERS SHOWN ON DIVISION 23 DRAWINGS. ALL FIRE/SMOKE DAMPERS SHALL HAVE A MANUAL OVERRIDE SWITCH. PROVIDE DUCT DETECTOR WITHIN 5 FEET OF EACH FIRE/SMOKE DAMPER.
9. CONTRACTOR TO COORDINATE ALL LOCATIONS OF FIRE/SMOKE AND SMOKE DAMPERS WITH MECHANICAL CONTRACTOR. CONTRACTOR TO PROVIDE POWER, MONITOR MODULES, AND RELAYS AS REQUIRED FOR A COMPLETE SYSTEM.
10. DIVISION-26 IS RESPONSIBLE TO PROVIDE CONDUIT AND ROUGH-IN FOR ALL THERMOSTAT CONTROLS LOCATED WITHIN WALLS. COORDINATE WITH THE CONTROLS CONTRACTOR AND VERIFY EXACT LOCATION OF ALL THERMOSTATS.

SHEET KEYNOTES

P1	OPERABLE PARTITION CONTROL PANEL IS SUPPLIED BY PARTITION MANUFACTURER WITH 15' OF CABLE FROM THE MOTOR. VERIFY CONTROL PANEL MOUNTING IS WITHIN 15'. DIVISION 26 IS RESPONSIBLE TO WIRE FROM CONTROL PANEL TO FUSED DISCONNECT SWITCH AND CIRCUIT FROM PANEL AS INDICATED.
P2	SWITCHES 1 AND 2 ARE SUPPLIED BY PARTITION MANUFACTURER INSTALLED BY DIVISION 26. PROVIDE 5#18 FROM SWITCH 2 TO SWITCH 1 AND FROM SWITCH 1 TO THE CONTROL PANEL. PROVIDE ALL TERMINATIONS AS REQUIRED. COORDINATE ALL REQUIREMENTS WITH PARTITION INSTALLER.
P3	PROVIDE A NEMA 14-60, 60A-120/250V GRNDG PLUG IN A NEMA 3R ENCLOSURE, VERIFY EXACT LOCATION.
P4	OPERABLE PARTITION CONTROLLER IS SUPPLIED BY THE MANUFACTURER. MOUNT CONTROLLER WITHIN 5' OF THE MOTOR UNIT AND DISCONNECT SWITCH. VERIFY ALL WIRING AND TERMINATION REQUIREMENTS WITH PARTITION INSTALLER.
P5	KEY SWITCH AND PUSH BUTTON ARE SUPPLIED BY THE PARTITION SUPPLIER AND INSTALLED BY DIVISION 26. VERIFY ALL WIRING REQUIREMENTS.
P6	LOCATE RECEPTACLE ON DESK RECESS. COORDINATE STUB-UP LOCATIONS WITHIN MILLWORK WITH ARCHITECT AND MILLWORK SHOP DRAWINGS.
P7	VERIFY EXACT LOCATION OF TERMINATION FOR THE AUDIOLOGY Bbooth. FEED FROM THE WALL WITH FLEX CONDUIT.
P8	COORDINATE EXACT PLACEMENT OF THE RECEPTACLE IN THE FEATURE WALL WITH THE ARCHITECT.
P10	POWERED OVERHEAD DOOR IS EXISTING. VERIFY EXACT LOCATION OF THE MOTOR AND CONTROLLER. PROVIDE A NEW THERMAL SWITCH AND CIRCUIT AS INDICATED.

MHTN ARCHITECTS
MHTN Architects, Inc.
280 South 400 West
Suite 250
Salt Lake City, Utah 84101
Telephone (801) 595-6700
www.mhtn.com

BNA CONSULTING
4225 Lake Park Blvd, Suite 275
West Valley City, UT 84120
P: 801.532.2196
F: 801.532.2305
www.bnaconsulting.com

JORDAN SCHOOL DISTRICT

JORDAN LEARNING CENTER
3706 WEST 9800 SOUTH
SOUTH JORDAN, UT 84009

©2023 MHTN ARCHITECTS, INC.
Confidentiality Notice:
This document is intended for use on the Project identified herein by individuals and companies involved in the design, permitting, bidding and construction of the Project. MHTN Architects, Inc. grants limited rights to distribute and reproduce this document for this express purpose only. Distribution, printing or copying this document for purposes other than those indicated is strictly prohibited. If a digital copy of this document is received in error, please delete it.

SEAL

PROFESSIONAL ENGINEER
8/29/2024
BRIAN HICKS
No. 7799037
STATE OF UTAH

MHTN PROJECT NO. 2024528

Original drawing is 30 x 42. Do not scale contents of this drawing.

REVISIONS
CONTRACTOR TO VERIFY DRAWINGS IN FIELD. USE REFLECT LAST REVISION DATE.

NO.	DATE	DESCRIPTION

ISSUE
CONSTRUCTION DOCUMENTS
AUGUST 29, 2024

SHEET NAME
FIRST FLOOR POWER PLAN - AREA B

SHEET NUMBER
E311B

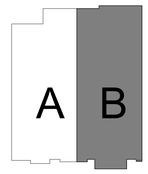

KEY PLAN

Autodesk Docs://2024528 JSD Retail Remodel/2413 - JSD LEARNING Center ELEC V24.rvt
8/28/2024 10:15:51 AM

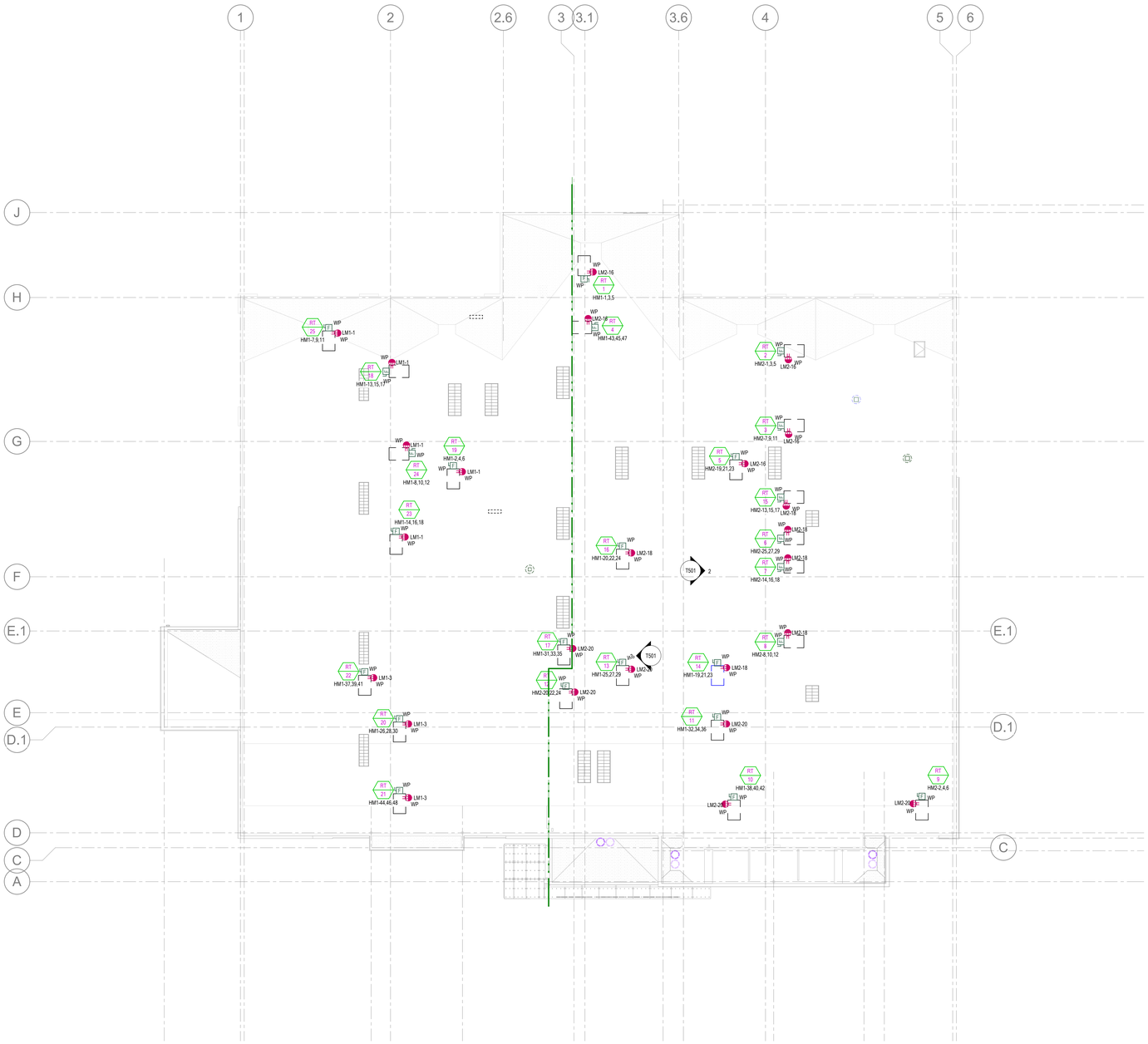

ELECTRICAL ROOF PLAN

SCALE = 1/16" = 1'-0"

GENERAL POWER SHEET NOTES

1. COORDINATE PLACEMENT OF ELECTRICAL DEVICES WITH ARCHITECT PRIOR TO ROUGH-IN. WHERE DEVICES ARE SHOWN IN SAME WALL SPACE, ALIGN VERTICALLY AND HORIZONTALLY. COORDINATE WITH ARCHITECTURAL DRAWINGS, ATHLETIC SAFETY WALL PADDING AND CABINETRY DRAWINGS.
2. ALL THE LOW VOLTAGE WIRE/CABLE FOR LIGHTING SENSORS, AUDIO/VISUAL EQUIPMENT, SOUND AMPLIFICATION, ETC. TO BE ROUTED THROUGH CONDUIT IN EXPOSED AND CLOUDED CEILING AREAS.
3. ALL LOW VOLTAGE WIRE/CABLE FOR LIGHTING SENSORS, AUDIO/VISUAL EQUIPMENT, CLASSROOM SOUND AMPLIFICATION, ETC. TO BE PROPERLY SUPPORTED PER THE TELE/DATA SPEC. AND AT 5'-0" INTERVALS AND TO FOLLOW BUILDING STRUCTURAL LINES. PULLING WIRE DIAGONALLY ACROSS ROOMS IS NOT ALLOWED. USING CEILING SYSTEM OR LIGHT FIXTURE SUPPORT/SEISMIC WIRES FOR SUPPORT IS NOT ALLOWED.
4. PROVIDE GFCI PROTECTION ON ALL DEVICES AND EQUIPMENT PER THE NEC REQUIREMENTS. DEVICES SHALL BE READILY ACCESSIBLE. IF ANY OUTLET IS INSTALLED WITHIN 6 FEET OF OUTSIDE EDGE OF SINK, CONTRACTOR SHALL PROVIDE GFCI RECEPTACLE PER NEC, WHETHER SHOWN OR NOT.
5. ALL RECEPTACLES LOCATED THROUGHOUT THE BUILDING SHALL BE TAMPER RESISTANT PER NEC 406.12.
6. ELECTRICAL CONTRACTOR SHALL COORDINATE EXACT LOCATION OF ALL MECHANICAL UNITS WITH MECHANICAL CONTRACTOR. CIRCUITS TO ALL MECHANICAL EQUIPMENT SHALL BE DEDICATED UNLESS NOTED OTHERWISE.
7. FOR VAV POWER, PROVIDE A DEDICATED 120V/20A CIRCUIT FROM A PANEL LOCATED IN THE ELECTRICAL ROOM OF THE ASSOCIATED QUADRANT. COORDINATE EXACT LOCATION OF ALL VAV BOXES WITH MECHANICAL CONTRACTOR PRIOR TO ROUGH-IN.
8. PROVIDE 120V CIRCUIT FROM NEAREST PROVIDED CIRCUIT FOR FIRE/SMOKE DAMPER RELAYS. PROVIDE FIRE ALARM MODULES AND RELAYS AS NECESSARY FOR ALL FIRE/SMOKE DAMPERS SHOWN ON DIVISION 23 DRAWINGS. ALL FIRE/SMOKE DAMPERS SHALL HAVE A MANUAL OVERRIDE SWITCH. PROVIDE DUCT DETECTOR WITHIN 5 FEET OF EACH FIRE/SMOKE DAMPER.
9. CONTRACTOR TO COORDINATE ALL LOCATIONS OF FIRE/SMOKE AND SMOKE DAMPERS WITH MECHANICAL CONTRACTOR. CONTRACTOR TO PROVIDE POWER, MONITOR MODULES, AND RELAYS AS REQUIRED FOR A COMPLETE SYSTEM.
10. DIVISION-26 IS RESPONSIBLE TO PROVIDE CONDUIT AND ROUGH-IN FOR ALL THERMOSTAT CONTROLS LOCATED WITHIN WALLS. COORDINATE WITH THE CONTROLS CONTRACTOR AND VERIFY EXACT LOCATION OF ALL THERMOSTATS.

SHEET KEYNOTES

MHTN ARCHITECTS

MHTN Architects, Inc.
280 South 400 West
Suite 250
Salt Lake City, Utah 84101
Telephone (801) 595-6700
www.mhtn.com

BNA CONSULTING
4225 Lake Park Blvd, Suite 275
West Valley City, UT 84120
P: 801.532.2196
F: 801.532.2305
www.bnaconsulting.com
SALT LAKE ST GEORGE

JORDAN SCHOOL DISTRICT

JORDAN LEARNING CENTER

3706 WEST 9800 SOUTH
SOUTH JORDAN, UT 84009

©2023 MHTN ARCHITECTS, INC.
Confidentiality Notice:
This document is intended for use on the Project identified herein by individuals and companies involved in the design, permitting, bidding and construction of the Project. MHTN Architects, Inc. grants limited rights to distribute and reproduce this document for this express purpose only. Distribution, printing or copying this document for purposes other than those indicated is strictly prohibited. If a digital copy of this document is received in error, please delete it.

SEAL

MHTN PROJECT NO. 2024528

Original drawing is 30 x 42. Do not scale contents of this drawing.

REVISIONS
CONTRACTOR TO VERIFY DRAWINGS IN FIELD USE REFLECT LAST REVISION DATE.

NO.	DATE	DESCRIPTION

ISSUE
CONSTRUCTION DOCUMENTS
AUGUST 29, 2024

SHEET NAME
ROOF POWER PLAN

SHEET NUMBER
E312

Autodesk Docs://2024528 JSD Retail Remodel/24133 - JSD - LEARNING Center ELEC V24.rvt
8/28/2024 10:15:54 AM

ALUMINUM CONDUCTOR & CONDUIT SCHEDULE

TYPE	AMP.	COND. SIZE	CONDUCTOR QUAN.	CONDUCTOR SIZE	INSUL-ATION	EQ. GND. COND.
31X	120	2"	3	1/0	XHHW-2	4
41X	120	2"	4	1/0	XHHW-2	4
51X	120	2"	5 *	1/0	XHHW-2	4
32X	135	2"	3	2/0	XHHW-2	4
42X	135	2"	4	2/0	XHHW-2	4
52X	135	2"	5 *	2/0	XHHW-2	4
33X	155	2"	3	3/0	XHHW-2	4
43X	155	2"	4	3/0	XHHW-2	4
53X	155	3"	5 *	3/0	XHHW-2	4
34X	180	2"	3	4/0	XHHW-2	4
44X	180	3"	4	4/0	XHHW-2	4
54X	180	3"	5 *	4/0	XHHW-2	2
325	205	2"	3	250	XHHW-2	2
425	205	3"	4	250	XHHW-2	2
525	205	3"	5 *	250	XHHW-2	2
330	230	3"	3	300	XHHW-2	2
430	230	3"	4	300	XHHW-2	2
530	230	3"	5 *	300	XHHW-2	2
335	250	3"	3	350	XHHW-2	2
435	250	3"	4	350	XHHW-2	2
535	250	3"	5 *	350	XHHW-2	2
440	270	3"	4	400	XHHW-2	2
540	270	3"	5 *	400	XHHW-2	2
350	310	4"	3	500	XHHW-2	1
450	310	4"	4	500	XHHW-2	1
550	310	4"	4	500	XHHW-2	1
375	385	4"	3	750	XHHW-2	1
475	385	4"	4	750	XHHW-2	1
575	385	4"	5 *	750	XHHW-2	1

ALUMINUM CONDUCTOR & CONDUIT SCHEDULE FOR PARALLEL RUNS

TYPE	MAX. O.C. PROT.	COND. AMPS	SETS	CONDUCTOR QUAN.	CONDUCTOR SIZE	CONDUIT SIZE	EQ. GND. COND.
325-2	400	410	2	3	250	4"	2/0
425-2	400	410	2	4	250	4"	2/0
525-2	400	410	2	5 *	250	4"	2/0
350-2	600	620	2	3	500	4"	2/0
450-2	600	620	2	4	500	4"	2/0
550-2	600	620	2	5 *	500	4"	2/0
375-2	800	770	2	3	750	4"	3/0
475-2	800	770	2	4	750	4"	3/0
575-2	800	770	2	5 *	750	4"	3/0
350-3	800	930	3	3	500	4"	3/0
375-3	1000	1150	3	3	750	4"	4/0
475-3	1000	1150	3	4	750	4"	4/0
575-3	1000	1150	3	5 *	750	4"	4/0
350-4	1200	1240	4	3	500	4"	250
450-4	1200	1240	4	4	500	4"	250
340-6	1600	1620	6	3	400	4"	350
440-6	1600	1620	6	4	400	4"	350
460-6	2000	2040	6	4	600	4"	400
375-6	2000	2310	6	3	750	4"	400
475-6	2000	2310	6	4	750	4"	400
375-7	2500	2695	7	3	750	5"	600
475-7	2500	2695	7	4	750	5"	600
375-8	3000	3080	8	3	750	5"	600
475-8	3000	3080	8	4	750	5"	600
475-11	4000	4235	11	4	750	5"	750

NOTES
IN PARALLEL RUNS SIZE GND. COND. IN ACCORDANCE WITH NEC PARA. 250-122.

GND. CONDUCTOR MAY BE DELETED ON SERVICE ENTRANCE CONDUCTORS

* 200% NEUTRAL
** COPPER CONDUCTOR (XHHW)

PROVIDE COMPACT STRANDED ALUMINUM ASSOCIATION 8000 SERIES ALLOY CONDUCTORS.

PROVIDE TERMINATION FOR ALUMINUM-ALLOY CONDUCTORS OF HYDRAULIC COMPRESSION TYPE ONLY LISTED UNDER UL 486-B MARKED "AL7CU" FOR 75° RATED CIRCUITS.

PROVIDE ALL ELECTRICAL EQUIPMENT WITH PROPER SIZING TO ACCOMMODATE ALUMINUM CONDUCTORS, COORDINATE WITH EQUIPMENT SUPPLIER.

FIRE RATED CABLE SCHEDULE

TYPE		COND. AMPS	CONDUCTOR QUAN.	CONDUCTOR SIZE	INSUL-ATION	EQ. GND. COND.
44		125	4	4	MgO	8
43		145	4	3	MgO	8
42		170	4	2	MgO	8
41		195	4	1	MgO	6
41X		230	4	1/0	MgO	4
42X		265	4	2/0	MgO	4
43X		310	4	3/0	MgO	3
44X		360	4	4/0	MgO	3
425		405	4	250	MgO	2
435		505	4	350	MgO	1
450		620	4	500	MgO	1/0

FIRE RATED CABLE FOR PARALLEL RUNS

TYPE	MAX. O.C. PROT.	COND. AMPS	SETS	CONDUCTOR QUAN.	CONDUCTOR SIZE	INSUL-ATION	EQ. GND. COND.
425-2	800	810	2	4	250	MgO	2/0
435-2	1000	1010	2	4	350	MgO	2/0
450-2	1200	1240	2	4	500	MgO	3/0
450-3	1600	1860	3	4	500	MgO	4/0
435-4	2000	2020	4	4	350	MgO	250
435-5	2500	2525	5	4	350	MgO	350
450-5	3000	3100	5	4	500	MgO	500
450-7	4000	4340	7	4	500	MgO	500

NOTES
IN PARALLEL RUNS SIZE GND. COND. IN ACCORDANCE WITH NEC PARA. 250-122.

GND. CONDUCTOR MAY BE DELETED ON SERVICE ENTRANCE CONDUCTORS

ALUMINUM CONDUCTOR & O.C. PROT. FOR TRANSFORMER PRIMARY / ALUMINUM XHHW-2 CONDUCTOR & O.C. PROT. FOR TRANSFORMER SECONDARY △ 480-208/120 Y

TRANS KVA	O.C. PROT.	TYPE COND.*	GND. COND.**	MIN. Z%	O.C. PROT.	TYPE COND.	COND. AMPS	SETS	CONDUCTOR QUAN.	CONDUCTOR SIZE	CONDUIT SIZE	EQ. GND. COND.
30	50	38	8	3	100	T41X-1	120	1	4	1/0	1-1/2"	6
45	70	34	4	3	175	T44X-1	180	1	4	4/0	3"	4
75	125	32X	2	3	225	T435-1	250	1	4	350	3"	2
112.5	175	34X	2	4	400	T425-2	410	2	4	250	3"	1
150	300	350	2/0	4	600	T450-2	610	2	4	500	4"	2/0
225	400	375	3/0	4	800	T440-3	810	3	4	400	4"	3/0
300	600	350-2	3/0	5	1200	T450-4	1240	4	4	500	4"	250
500	800	350-3	3/0	5	1600	T450-6	1860	6	4	500	4"	350
750	1500	350-6	3/0	5	3000	T450-10	3100	10	4	500	4"	400***

ALUMINUM CONDUCTOR & O.C. PROT. FOR TRANSFORMER PRIMARY / ALUMINUM XHHW-2 CONDUCTOR & O.C. PROT. FOR TRANSFORMER SECONDARY (200% NEUTRAL) △ 480-208/120 Y

TRANS KVA	O.C. PROT.	TYPE COND.*	GND. COND.**	MIN. Z%	O.C. PROT.	TYPE COND.	COND. AMPS	SETS	CONDUCTOR QUAN.	CONDUCTOR SIZE	CONDUIT SIZE	EQ. GND. COND.
30	50	36	8	3	100	T51X-1	120	1	5	1/0	2"	6
45	70	34	4	3	175	T545-1	180	1	5	4/0	3"	4
75	125	32X	2	3	225	T535-2	250	1	5	350	3"	2
112.5	175	34X	2	4	400	T525-2	410	2	5	250	3"	1
150	300	350	2/0	4	600	T550-2	610	2	5	500	4"	2/0
225	400	375	3/0	4	800	T540-3	810	3	5	400	4"	3/0
300	600	350-2	3/0	5	1200	T550-4	1240	4	5	500	4"	250
500	800	350-3	3/0	5	1600	T550-6	1860	6	5	500	4"	350
750	1500	350-6	3/0	5	3000	T550-10	3100	10	5	500	4"	400***

* SEE SCHEDULE FOR CONDUIT AND WIRE SIZE ** COPPER GROUNDING ELECRODE *** CU GROUND

GENERAL SHEET NOTES

1. EMERGENCY EQUIPMENT INDICATED SHALL BE SELECTIVELY COORDINATED TO 0.1 SECONDS PER SPECIFICATION SECTION 26 0573. STUDY SHALL BE SUBMITTED PRIOR TO ALL OTHER EQUIPMENT SUBMITTALS.
2. SEE PLANS FOR LOCATIONS OF PANELBOARDS, SWITCHBOARDS TRANSFER SWITCHES, BUSWAY, TRANSFORMERS DISCONNECTS, ETC. AND PROVIDE NEMA RATED ENCLOSURES AS REQUIRED.
3. SUBMIT DIMENSIONED DRAWINGS OF ALL ELECTRICAL ROOMS SHOWING ALL EQUIPMENT LOCATIONS WITHIN EACH SPACE BASED ON THE EQUIPMENT MANUFACTURER GEAR SIZES WITH ALL EQUIPMENT SHOP DRAWINGS.
4. PROVIDE AN ARC ENERGY-REDUCING MAINTENANCE SWITCH FOR ALL OVER-CURRENT PROTECTIVE DEVICES RATED 1200 AMPS OR HIGHER. REFER TO SPECIFICATION SECTION 26 2815 OVER-CURRENT PROTECTIVE DEVICES AND 240.87 OF CURRENT NATIONAL ELECTRICAL CODE (NEC).
5. PROVIDE ELECTRONIC TRIP CIRCUIT BREAKERS FOR ALL CIRCUIT BREAKERS 400 AMPS AND ABOVE. REFER TO THE OVERCURRENT PROTECTION SPECIFICATION SECTION FOR ADDITIONAL REQUIREMENTS.
6. ALL EQUIPMENT SHALL BE FULLY RATED. NO SERIES RATINGS ARE ALLOWED. REFER TO SPECIFICATION SECTIONS FOR ADDITIONAL DETAILS.
7. PROVIDE PRELIMINARY SHORT CIRCUIT STUDY SUBMITTAL PRIOR TO SUBMITTAL OF ANY ELECTRICAL EQUIPMENT. REFER TO SPECIFICATION SECTION 26 0573 PROTECTIVE DEVICE STUDY. PROVIDE AIC AND ARC-FLASH HAZARD LABELS PER THE SPECIFICATIONS AND NEC.
8. PROVIDE A SURGE PROTECTIVE DEVICE ON EACH SWITCHBOARD AND PANELBOARD LOCATED ON THE EMERGENCY DISTRIBUTION SYSTEM. REFER TO SPECIFICATION SECTION 26 4313 SURGE-PROTECTIVE DEVICES (SPD) FOR LOCATION CATEGORY.
9. REFER TO DISTRIBUTION BOARD AND PANELBOARD SCHEDULES FOR ADDITIONAL BREAKERS AND SPD REQUIREMENTS.
10. GFPE PROTECTION OF THE MAIN BREAKER SHALL BE TESTED PRIOR TO THE RELEASE OF THE METER AND RESULTS SHALL BE SUBMITTED TO THE SCHOOL DISTRICT BUILDING OFFICIAL.
11. PROVIDE EQUIPMENT LABELING PER SPECIFICATIONS 26 0553. THE LABEL SHALL IDENTIFY THE DEVICE OR EQUIPMENT WHERE THE POWER SUPPLE ORIGINATES, AND THE SYSTEM VOLTAGE, PHASE OR LINE AND SYSTEM AT TALL TERMINATION, CONNECTION, AND SPLICE POINTS. FOR EXAMPLE: FEEDER POWER SUPPLY FOR PANEL "XX" ORIGINATES AT PANEL "XX" (OR SWITCHBOARD "XX", TRANSFORMER "XX", SWITCH "XX", ETC.); 120/208 VOLTS, 3-PHASE, PHASE COLOR IDENTIFICATION (OR 120/240, 277/480, ETC.).
12. PROVIDE ALL REQUIRED LUG ADAPTERS, PIN REDUCERS, POLARIS LUG KITS, ETC. AS REQUIRED. PROVIDE NEC SIZED JUNCTION BOX AHEAD OF PANELBOARD/GEAR AS NEEDED TO LOCATED AND TERMINATE CONDUCTORS ON POLARIS LUG ADAPTERS (<10' FROM FINALTERMINATION AT PANELBOARD). SIZE DOWN TO CONDUCTORS THAT FIT THE AVAILABLE LUGS AND/OR BREAKERS.

SHEET KEYNOTES

1. SQUARE D POWER LOGIC METERING.
2. GROUND TO BUILDING STRUCTURAL STEEL, WATER MAIN AND GROUND RODS PER SPECIFICATIONS.
3. PROVIDE 30' OF 2/0 BARE COPPER CONDUCTOR LOCATED WITHIN & NEAR THE BOTTOM OF FOOTING (MINIMUM 2" COVER).
4. PANEL EXTENSION WITH "MONO-FLAT" FRONT. PROVIDE MECHANICAL CONTACTORS.
5. PROVIDE A USERC 339 METER BASE MOUNTED TO EXTERIOR OF CT CABINET WITH 1" NIPPLE INTO CT COMPARTMENT.
6. COORDINATE BASE BID OR ALTERNATE FOR PANEL CONNECTED TO THIS FEEDER.
7. FIRE RATED CABLE. PROVIDE HO15 FIRE RATED TRAPEZE RACK. REFER TO SPECIFICATION FOR ADDITIONAL INFORMATION.
8. PROVIDE AN ENERGY-REDUCING MAINTENANCE SWITCH WITH LOCAL, LIT STATUS INDICATOR TO ALLOW FOR A REDUCTION OF THE INSTANTANEOUS PICKUP AND INSTANTANEOUS DELAY SETTINGS FOR USE DURING MAINTENANCE. DEVICE SHALL MOUNT IN FACE OF DEAD-FRONT. THE SWITCH SHALL BE PROVIDED BY THE SAME MANUFACTURER AS THE CIRCUIT BREAKER.
9. PROVIDE INTERLOCKING OF EMERGENCY SYSTEMS PER ARTICLE 700 OF THE NEC SO THAT THERE CAN BE NO INTERCONNECTION OF POWER SOURCES.
10. PROVIDE RATED ASSEMBLY FOR EMERGENCY GENERATOR FEEDERS AND GENERATOR CONTROL WIRING PER ARTICLE 700 OF THE NEC.
11. PROVIDE A BUILDING ENERGY AND POWER METERING SYSTEM IN ACCORDANCE WITH IECC 2021. REFER TO SPECIFICATION 26 1010 AND DIAGRAM U601/E341 FOR ADDITIONAL REQUIREMENTS DISTRIBUTION BOARD, PANELBOARD, AND BRANCH PANEL SUB-METERING AND PROVIDE ALL NECESSARY WIRING, INFRASTRUCTURE, INTERCONNECTION, AND EQUIPMENT AS NECESSARY FOR A COMPLETE AND WORKING SYSTEM.

COPPER CONDUCTOR & CONDUIT SCHEDULE

TYPE	AMP.	COND. SIZE	CONDUCTOR QUAN.	CONDUCTOR SIZE	INSUL-ATION	EQ. GND. COND.
20	30	3/4"	2	10	THHN THWN	10
30	30	3/4"	3	10	THHN THWN	10
40	30	3/4"	4	10	THHN THWN	10
28	40	1"	2	8	THHN THWN	10
38	40	1"	3	8	THHN THWN	10
48	40	1"	4	8	THHN THWN	10
26	55	1"	2	6	THHN THWN	8
36	55	1"	3	6	THHN THWN	8
46	55	1"	4	6	THHN THWN	8
24	70	1"	2	4	THHN THWN	8
34	70	1-1/4"	3	4	THHN THWN	8
44	70	1-1/4"	4	4	THHN THWN	8
23	85	1-1/4"	2	3	THHN THWN	8
33	85	1-1/4"	3	3	THHN THWN	8
43	85	1-1/2"	4	3	THHN THWN	8
32	95	1-1/2"	3	2	THHN THWN	6
42	95	1-1/2"	4	2	THHN THWN	6
31	110	1-1/2"	3	1	THHN THWN	6
41	110	2"	4	1	THHN THWN	6
51	110	2"	5 *	1	THHN THWN	6

COPPER CONDUCTOR & CONDUIT SCHEDULE FOR PARALLEL RUNS

TYPE	MAX. O.C. PROT.	COND. AMPS	SETS	CONDUCTOR QUAN.	CONDUCTOR SIZE	CONDUIT SIZE	EQ. GND. COND.
44X-2	400	460	2	4	4/0	2-1/2"	3
335-2	600	620	2	3	350	3"	1
435-2	600	620	2	4	350	3"	1
535-2	600	620	2	5 *	350	3"	1
350-2	800	760	2	3	500	4"	1/0
450-2	800	760	2	4	500	4"	1/0
550-2	800	760	2	5 *	500	4"	1/0
350-3	1000	1140	3	3	500	4"	2/0
450-3	1000	1140	3	4	500	4"	2/0

NOTES
IN PARALLEL RUNS SIZE GND. COND. IN ACCORDANCE WITH NEC PARA. 250-122.

GND. CONDUCTOR MAY BE DELETED ON SERVICE ENTRANCE CONDUCTORS

* 200% NEUTRAL

FAULT CURRENT SCHEDULE (REFERENCE ONLY)

DEVICE	VOLTAGE	FEEDER LENGTH	FEEDER AMPACITY	FAULT AT DEVICE	TRANSFORMER KVA	TRANSFORMER Z%	TRANSFORMER FAULT AT PRIMARY
XFER SW							
				0			
				0			
				0	EBIM		
				0			
				0			
				EBIM			
MDP	480V			EBIM			
H1	480V			0			
LDP	208V						
A2	480V			0	EBIM		
A1	480V			0			
M1	480V	EBIM		0			

NOTES:
1. **REFERENCE ONLY:** THE SCHEDULE SHOWN IS FOR REFERENCE ONLY. THE CALCULATED LENGTHS AND AVAILABLE FAULT CURRENT FOR ELECTRICAL EQUIPMENT IS BASED UPON MODEL INFORMATION WITH ENGINEERING CONTRIBUTIONS. DIVISION 26 SHALL CONDUCT A PROTECTIVE DEVICE STUDY PER SPECIFICATION SECTION 26 0573 AND PROVIDE INFORMATION BASED UPON ACTUAL FIELD CONDITIONS.
2. AT TIME OF DOCUMENT PREPARATION THE UTILITY COMPANY HAD NOT CALCULATED AND PROVIDED THE AVAILABLE FAULT CURRENT AT THE SECONDARY OF THE PAD MOUNTED TRANSFORMER. BECAUSE OF THIS WE HAVE ASSUMED A WORSE CASE SCENARIO FOR THE SIZE OF THE TRANSFORMER AND ITS IMPEDANCE AND USED AN INFINITE FAULT CURRENT FOR OUR FAULT CURRENT CALCULATIONS.
3. ALL EQUIPMENT SHALL BE FULL RATED. SERIES RATING OF EQUIPMENT WILL NOT BE ACCEPTED.
4. ALL OVERCURRENT PROTECTION DEVICES SHALL HAVE A FAULT CURRENT RATING THAT IS EQUAL OR GREATER THAN THE CALCULATED RATING OF THE SWITCHGEAR AND/OR PANELBOARD.

JORDAN SCHOOL DISTRICT (JSD) HAS PREVIOUSLY PROCURED THE CT/MS, MDP, AND LDP SWITCHGEAR. DIVISION 26 SHALL INCLUDE WITHIN THEIR BID PACKAGE THE RECEIVING AND INSTALLATION OF THE PREVIOUSLY PROCURED CT/MS AND MDP ALONG WITH THE ENTIRETY THE REMAINING GEAR, EQUIPMENT, FEEDERS, AND THE COMPREHENSIVE INSTALLATION OF THE ENTIRE ONE-LINE AND ELECTRICAL INFRASTRUCTURE WITHIN THEIR BID. DIVISION 26 WILL SHOULDER THE RESPONSIBILITY OF BOTH RECEIVING THE ITEMS AND ENSURING THE COMPLETE INSTALLATION OF THE ELECTRICAL SYSTEM, ALONG WITH ALL OTHER NECESSARY PREREQUISITES TO ESTABLISH A FULLY FUNCTIONAL ELECTRICAL SYSTEM.

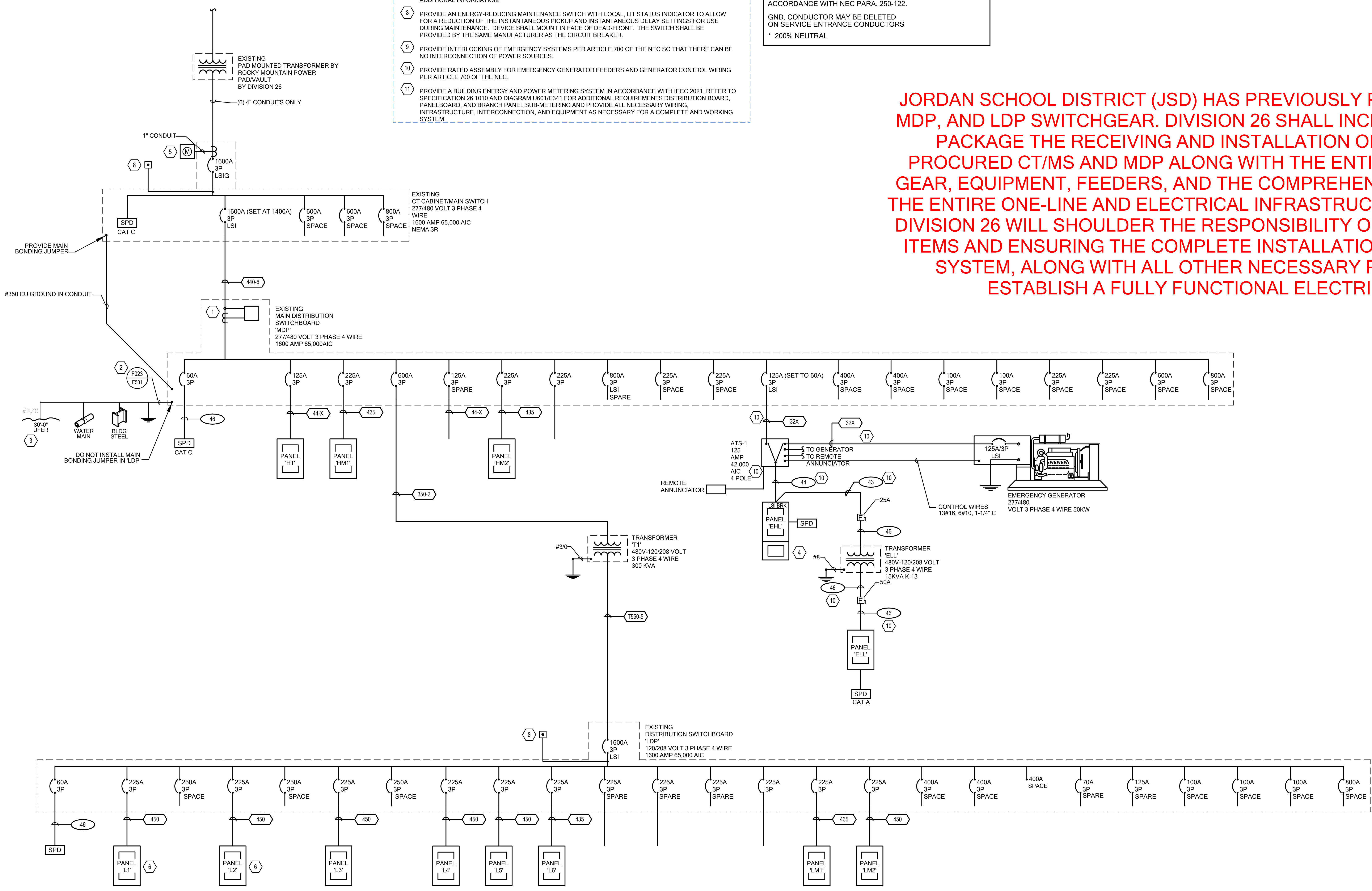

1 ONE-LINE DIAGRAM
SCALE = 12" = 1'-0"

MHTN ARCHITECTS
MHTN Architects, Inc.
280 South 400 West
Suite 250
Salt Lake City, Utah 84101
Telephone (801) 595-6700
www.mhtn.com

BNA CONSULTING
4225 Lake Park Blvd, Suite 275
West Valley City, UT 84120
P: 801.532.2196
F: 801.532.2305
www.bnaconsulting.com
SALT LAKE ST. GEORGE

JORDAN SCHOOL DISTRICT

JORDAN LEARNING CENTER
3706 WEST 9800 SOUTH
SOUTH JORDAN, UT 84009

©2023 MHTN ARCHITECTS, INC.
Confidentiality Notice:
This document is intended for use on the Project identified herein by individuals and companies involved in the design, permitting, bidding and construction of the Project. MHTN Architects, Inc. grants limited rights to distribute and reproduce this document for this express purpose only. Distribution, printing or copying this document for purposes other than those indicated is strictly prohibited. If a digital copy of this document is received in error, please delete it.

SEAL
PROFESSIONAL ENGINEER 8/29/2024 BRIAN HICKS No. 7709037-2202 STATE OF UTAH

MHTN PROJECT NO. 2024528

Original drawing is 30 x 42. Do not scale contents of this drawing.

REVISIONS
CONTRACTOR TO VERIFY DRAWINGS IN FIELD USE REFLECT LAST REVISION DATE.

NO. △	DATE	DESCRIPTION

ISSUE
CONSTRUCTION DOCUMENTS
AUGUST 29, 2024

SHEET NAME
ONE-LINE DIAGRAM

SHEET NUMBER
E360

Autodesk Docs://2024528 JSD Retail Remodel/24133 - JSD LEARNING Center ELEC V24.rvt
8/28/2024 10:15:57 AM

PANELBOARD SCHEDULE

PANEL: L1 TYPE: Type 1 VOLTS: 120/208 Y PHASE: 3 WIRES: 4

MOUNTING: SURFACE LOCATION: ELECTRICAL A142 MAINS: MLO

BUSSING: FED FROM: LDP

AMP: 225 A

___ SUBFEED LUGS
X DOOR-IN-DOOR
___ ISO GROUND
___ 200% NEUTRAL
___ SPD

BRANCH BREAKERS

ITEM	AMPS	TYPE	POLE	WIRE SIZE	CIR. NO.	A	B	C	A	B	C	CIR. NO.	WIRE SIZE	POLE	TYPE	AMPS	ITEM
RECEPT, COACH TEAM (12)...	20 A		1	12	1	1080			1440			2	12	1		20 A	RECEPT, COACH TEAM (12) A139
RECEPT, COACH TEAM (12)...	20 A		1	12	3		1080			2160		4	12	1		25 A	RECEPT, Room A138, A139
RECEPT, Room A134, A135,...	20 A		1	12	5			1080			720	6	12	1		20 A	RECEPT, Room A141, A142
RECEPT, Room A140, A141	20 A		1	12	7	720			360			8	12	1		20 A	RECEPT, BREAK ROOM A141
* ICEMAKER	20 A	GF	1	12	9		180			360		10	12	1		20 A	RECEPT, CORRIDOR A140
RECEPT, Room A145, A146,...	20 A		1	12	11			900			1080	12	12	1		20 A	RECEPT, Room A140, A143
RECEPT, Room A149, A150	20 A		1	12	13	360			360			14	12	1		20 A	RECEPT, LAUNDRY / RECEIVING...
RECEPT, Room A140, B135A	20 A		1	12	15		900			180		16	12	1	GF	20 A	*WASHER
RECEPT, LAUNDRY /...	20 A		1	12	17			360			2500	18	10	2	GF	30 A	*DRYER
RECEPT, BREAK ROOM A141	20 A		1	12	19	180			2500			20	--	--	--	--	--
* REFRIGERATOR	20 A	GF	1	12	21		1000			180		22	12	1		20 A	RECEPT, WORK ROOM A133
RECEPT, WORK ROOM A133	20 A		1	12	23			720			480	24		3		20 A	OPERABLE PARTITION
* REFRIGERATOR	20 A	GF	1	12	25	1000			480			26	--	--	--	--	--
* MICROWAVE	20 A	GF	1	12	27		1200			480		28	--	--	--	--	--
* MICROWAVE	20 A	GF	1	12	29			1200			360	30		1		20 A	Other, RECEPT, TODDLER A138
* MICROWAVE	20 A	GF	1	12	31	1200			0			32	--	1	--	20 A	SPARE
HVAC, AUDIOLOGY A130	20 A		1	12	33		500			0		34	--	1	--	20 A	SPARE
SPARE	20 A	--	1	--	35			0			0	36	--	1	--	20 A	SPARE
SPARE	20 A	--	1	--	37	0			0			38	--	1	--	20 A	SPARE
SPARE	20 A	--	1	--	39		0			0		40	--	1	--	20 A	SPARE
SPARE	20 A	--	1	--	41			0			0	42	--	1	--	20 A	SPARE

FEED THRU LOAD 0 VA

A	B	C	
9680	8220	9400	TOTAL (VA)
82 A	69 A	80 A	AMPS/PHASE

CONNECTED LOAD TOTAL 25860 VA

AIC RATING 22000 AMPS RMS SYSM.

Load Classification	Connected Load	Demand Factor	Estimated Demand	Panel Totals	
HVAC	500 VA	100.00%	500 VA		
RECEPT	14760 VA	83.88%	12380 VA	Total Conn. Load:	25860 VA
* MICROWAVE	3600 VA	100.00%	3600 VA	Total Est. Demand:	23480 VA
* REFRIGERATOR	2000 VA	100.00%	2000 VA	Total Conn. Current:	72 A
* DRYER	5000 VA	100.00%	5000 VA	Total Est. Demand Current:	65 A

NOTES:
*

CIRCUIT BREAKER TYPE:
<BLANK> THERMAL MAGNETIC CIRCUIT BREAKER
GF 5 mA GROUND FAULT CIRCUIT BREAKER
AF ARC-FAULT CIRCUIT BREAKER
CO COMBINATION AFCI/GFCI CIRCUIT BREAKER
EG 30 mA EQUIPMENT GROUND FAULT CIRCUIT BREAKER
ST SHUNT TRIP CIRCUIT BREAKER

PANELBOARD SCHEDULE

PANEL: L3 TYPE: Type 1 VOLTS: 120/208 Y PHASE: 3 WIRES: 4

MOUNTING: SURFACE LOCATION: ELECTRICAL A142 MAINS: MLO

BUSSING: FED FROM: LDP

AMP: 225 A

___ SUBFEED LUGS
X DOOR-IN-DOOR
___ ISO GROUND
___ 200% NEUTRAL
___ SPD

BRANCH BREAKERS

ITEM	AMPS	TYPE	POLE	WIRE SIZE	CIR. NO.	A	B	C	A	B	C	CIR. NO.	WIRE SIZE	POLE	TYPE	AMPS	ITEM
RECEPT, TEACHER TEAM (47)...	20 A		1	12	1	720			1440			2	12	1		20 A	RECEPT, TEACHER TEAM (47) B128
RECEPT, TEACHER TEAM (47)...	20 A		1	12	3		1440			1440		4	12	1		20 A	RECEPT, TEACHER TEAM (47) B128
RECEPT, TEACHER TEAM (47)...	20 A		1	12	5			1440			1440	6	12	1		20 A	RECEPT, TEACHER TEAM (47) B128
RECEPT, TEACHER TEAM (47)...	20 A		1	12	7	1440			1440			8	12	1		20 A	RECEPT, TEACHER TEAM (47) B128
RECEPT, TEACHER TEAM (47)...	20 A		1	12	9		1800			1440		10	12	1		20 A	RECEPT, TEACHER TEAM (47) B128
RECEPT, TEACHER TEAM (47)...	20 A		1	12	11			1440			1440	12	12	1		20 A	RECEPT, TEACHER TEAM (47) B128
RECEPT, TEACHER TEAM (47)...	20 A		1	12	13	1440			360			14	12	1		20 A	RECEPT, PROCESSING B135A
RECEPT, PROCESSING B135A	20 A		1	12	15		720			540		16	12	1		20 A	RECEPT, SCIENCE / ART / CTE...
RECEPT, SCIENCE / ART / CTE...	20 A		1	12	17			720			180	18	12	1	GF	20 A	*DISHWASHER
*WATER FOUNTAIN	20 A		1	12	19	360			720			20	12	1		20 A	RECEPT, PREP & STORAGE B129
Other	20 A		1	12	21		700					22					
*REFRIGERATOR	20 A	GF	1	12	23			1000				24					
*MICROWAVE	20 A		1	12	25	180						26					
					27							28					
					29							30					
					31							32					
					33							34					
					35							36					
					37							38					
					39							40					
					41							42					

FEED THRU LOAD 0 VA

A	B	C	
8100	8080	7660	TOTAL (VA)
68 A	68 A	64 A	AMPS/PHASE

CONNECTED LOAD TOTAL 23840 VA

AIC RATING 22000 AMPS RMS SYSM.

Load Classification	Connected Load	Demand Factor	Estimated Demand	Panel Totals	
Other	700 VA	100.00%	700 VA		
RECEPT	22140 VA	72.58%	16070 VA	Total Conn. Load:	23840 VA
* REFRIGERATOR	1000 VA	100.00%	1000 VA	Total Est. Demand:	17770 VA
				Total Conn. Current:	66 A
				Total Est. Demand Current:	49 A

NOTES:

CIRCUIT BREAKER TYPE:
<BLANK> THERMAL MAGNETIC CIRCUIT BREAKER
GF 5 mA GROUND FAULT CIRCUIT BREAKER
AF ARC-FAULT CIRCUIT BREAKER
CO COMBINATION AFCI/GFCI CIRCUIT BREAKER
EG 30 mA EQUIPMENT GROUND FAULT CIRCUIT BREAKER
ST SHUNT TRIP CIRCUIT BREAKER

PANELBOARD SCHEDULE

PANEL: L5 TYPE: Type 1 VOLTS: 120/208 Y PHASE: 3 WIRES: 4

MOUNTING: SURFACE LOCATION: STORAGE B116 MAINS: MLO

BUSSING: FED FROM: LDP

AMP: 225 A

___ SUBFEED LUGS
X DOOR-IN-DOOR
___ ISO GROUND
___ 200% NEUTRAL
___ SPD

BRANCH BREAKERS

ITEM	AMPS	TYPE	POLE	WIRE SIZE	CIR. NO.	A	B	C	A	B	C	CIR. NO.	WIRE SIZE	POLE	TYPE	AMPS	ITEM
RECEPT STORAGE B124	20 A		1	12	1	720			900			2	12	1		20 A	RECEPT LEARNING STUDIO B123
RECEPT LEARNING STUDIO...	20 A		1	12	3		900			1080		4	12	1		20 A	RECEPT COUNSELOR B114
RECEPT COUNSELOR B113	20 A		1	12	5			900			900	6	12	1		20 A	RECEPT PRINCIPAL B112
RECEPT PRINCIPAL B111	20 A		1	12	7	900			1080			8	12	1		20 A	RECEPT PRINCIPAL B109
RECEPT TECH SPECIALIST...	20 A		1	12	9		360			540		10	12	1		20 A	RECEPT TECH SPECIALIST B101
RECEPT WORKROOM B108	20 A		1	12	11			720			180	12	12	1		20 A	RECEPT WORKROOM B108
RECEPT VIRTUAL SCHOOLS...	20 A		1	12	13	900			1080			14	12	1		20 A	RECEPT VIRTUAL SCHOOLS...
RECEPT LOBBY B100	20 A		1	12	15		900			900		16	12	1		20 A	RECEPT TESTING SPECIALIST...
RECEPT TESTING B105	20 A		1	12	17			1260			720	18	12	1		20 A	RECEPT CONFERENCE B118
RECEPT PSYCHIATRIST B117	20 A		1	12	19	900			900			20	12	1		20 A	RECEPT STUDENT COMMONS...
RECEPT LEARNING STUDIO...	20 A		1	12	21		900			1080		22	12	1		20 A	RECEPT LEARNING STUDIO B125
RECEPT LEARNING STUDIO...	20 A		1	12	23			1080			900	24	12	1		20 A	RECEPT LEARNING STUDIO B126
RECEPT STUDENT COMMONS...	20 A		1	12	25	900			720			26	12	1		20 A	RECEPT MULTIPURPOSE B119
RECEPT FURNITURE STORAG...	20 A		1	12	27		900			360		28	12	1		20 A	RECEPT MULTIPURPOSE B119
RECEPT MULTIPURPOSE B119	20 A		1	12	29			860			360	30	12	1		20 A	RECEPT MULTIPURPOSE B119
RECEPT STUDENT COMMONS...	20 A		1	12	31	900			1360			32	12	1		20 A	MULTIPURPOSE B119
RECEPT VIRTUAL SCHOOLS...	20 A		1	12	33		1080			1000		34	12	1		20 A	Other MULTIPURPOSE B119
RECEPT STORAGE B102	20 A		1	12	35			360			500	36	12	1		20 A	Other MULTIPURPOSE B119
RECEPT STORAGE B102	20 A		1	12	37	360			360			38	12	1		20 A	RECEPT MULTIPURPOSE B119
SPARE	20 A	--	1	--	39		0			0		40	--	1	--	20 A	SPARE
SPARE	20 A	--	1	--	41			0			0	42	--	1	--	20 A	SPARE

FEED THRU LOAD 0 VA

A	B	C	
11980	10000	8740	TOTAL (VA)
101 A	85 A	73 A	AMPS/PHASE

CONNECTED LOAD TOTAL 30720 VA

AIC RATING 22000 AMPS RMS SYSM.

Load Classification	Connected Load	Demand Factor	Estimated Demand	Panel Totals	
Other	3000 VA	100.00%	3000 VA		
RECEPT	27720 VA	68.04%	18860 VA	Total Conn. Load:	30720 VA
				Total Est. Demand:	21860 VA
				Total Conn. Current:	85 A
				Total Est. Demand Current:	61 A

NOTES:

CIRCUIT BREAKER TYPE:
<BLANK> THERMAL MAGNETIC CIRCUIT BREAKER
GF 5 mA GROUND FAULT CIRCUIT BREAKER
AF ARC-FAULT CIRCUIT BREAKER
CO COMBINATION AFCI/GFCI CIRCUIT BREAKER
EG 30 mA EQUIPMENT GROUND FAULT CIRCUIT BREAKER
ST SHUNT TRIP CIRCUIT BREAKER

PANELBOARD SCHEDULE

PANEL: L2 TYPE: Type 1 VOLTS: 120/208 Y PHASE: 3 WIRES: 4

MOUNTING: SURFACE LOCATION: ELECTRICAL A142 MAINS: MLO

BUSSING: FED FROM: LDP

AMP: 225 A

___ SUBFEED LUGS
X DOOR-IN-DOOR
___ ISO GROUND
___ 200% NEUTRAL
___ SPD

BRANCH BREAKERS

ITEM	AMPS	TYPE	POLE	WIRE SIZE	CIR. NO.	A	B	C	A	B	C	CIR. NO.	WIRE SIZE	POLE	TYPE	AMPS	ITEM
RECEPT TODDLER A131	20 A		1	12	1	1080			540			2	12	1		20 A	RECEPT TODDLER A131
RECEPT	20 A		1	12	3		900			540		4	12	1		20 A	RECEPT TODDLER A122
RECEPT TODDLER A122	20 A		1	12	5			1080			900	6	12	1		20 A	RECEPT OFFICE A129
RECEPT TESTING A128	20 A		1	12	7	1260			1080			8	12	1		20 A	RECEPT TESTING A125
RECEPT TESTING A124	20 A		1	12	9		1080			1260		10	12	1		20 A	RECEPT TESTING A123
RECEPT COMMUNICATION...	20 A		1	12	11			540			1440	12	12	1		20 A	RECEPT, TEACHER TEAM (45) A132
RECEPT CORRIDOR A140	20 A		1	12	13	540			1440			14	12	1		20 A	RECEPT, TEACHER TEAM (45) A132
RECEPT WORK ROOM A133	20 A		1	12	15		700			1800		16	12	1		20 A	RECEPT, TEACHER TEAM (45) A132
RECEPT AUDIOLOGY A130	20 A		1	12	17			900			1800	18	12	1		20 A	RECEPT, TEACHER TEAM (45) A132
IDS	20 A		1	12	19	500			1800			20	12	1		20 A	RECEPT, TEACHER TEAM (45) A132
RECEPT CORRIDOR A140	20 A		1	12	21		700			900		22	12	1		20 A	RECEPT, TEACHER TEAM (45) A132
RECEPT CORRIDOR A140	20 A		1	12	23			700			1440	24	12	1		20 A	RECEPT TEACHER TEAM (45) A132
RECEPT CORRIDOR A140	20 A		1	12	25	700			1800			26	12	1		20 A	RECEPT, TEACHER TEAM (45) A132
RECEPT STORAGE A137	20 A		1	12	27		180			1440		28	12	1		25 A	RECEPT, TEACHER TEAM (45) A132
RECEPT COMMUNICATION...	20 A		1	12	29			1080			1440	30	12	1		25 A	RECEPT, TEACHER TEAM (45) A132
RECEPT OFFICE A152	20 A		1	12	31	900			1440			32	12	1		20 A	RECEPT TEACHER TEAM (45) A132
* REFRIGERATOR	20 A	GF	1		33		1000			0		34	--	1	--	20 A	SPARE
SPARE	20 A	--	1	--	35			0			0	36	--	1	--	20 A	SPARE
SPARE	20 A	--	1	--	37	0			0			38	--	1	--	20 A	SPARE
SPARE	20 A	--	1	--	39		0			0		40	--	1	--	20 A	SPARE
SPARE	20 A	--	1	--	41			0			0	42	--	1	--	20 A	SPARE

FEED THRU LOAD 0 VA

A	B	C	
13080	10500	11320	TOTAL (VA)
110 A	88 A	95 A	AMPS/PHASE

CONNECTED LOAD TOTAL 34400 VA

AIC RATING 22000 AMPS RMS SYSM.

Load Classification	Connected Load	Demand Factor	Estimated Demand	Panel Totals	
RECEPT	33400 VA	64.97%	21700 VA		
* REFRIGERATOR	1000 VA	100.00%	1000 VA	Total Conn. Load:	34400 VA
				Total Est. Demand:	22700 VA
				Total Conn. Current:	95 A
				Total Est. Demand Current:	63 A

NOTES:

CIRCUIT BREAKER TYPE:
<BLANK> THERMAL MAGNETIC CIRCUIT BREAKER
GF 5 mA GROUND FAULT CIRCUIT BREAKER
AF ARC-FAULT CIRCUIT BREAKER
CO COMBINATION AFCI/GFCI CIRCUIT BREAKER
EG 30 mA EQUIPMENT GROUND FAULT CIRCUIT BREAKER
ST SHUNT TRIP CIRCUIT BREAKER

PANELBOARD SCHEDULE

PANEL: L4 TYPE: Type 1 VOLTS: 120/208 Y PHASE: 3 WIRES: 4

MOUNTING: SURFACE LOCATION: ELECTRICAL A142 MAINS: MLO

BUSSING: FED FROM: LDP

AMP: 225 A

___ SUBFEED LUGS
X DOOR-IN-DOOR
___ ISO GROUND
___ 200% NEUTRAL
___ SPD

BRANCH BREAKERS

ITEM	AMPS	TYPE	POLE	WIRE SIZE	CIR. NO.	A	B	C	A	B	C	CIR. NO.	WIRE SIZE	POLE	TYPE	AMPS	ITEM
RECEPT, SCIENCE / ART / CTE...	20 A		1	12	1	180			700			2	12	1		20 A	PROJECTOR B125
RECEPT, SCIENCE / ART / CTE...	20 A		1	12	3		180			700		4	12	1		20 A	PROJECTOR B126
RECEPT, WELLNESS B136	20 A		1	12	5			360			700	6	12	1		20 A	PROJECTOR B127
PROJECTOR B125	20 A		1	12	7	700			180			8	12	1		20 A	RECEPT, SCIENCE / ART / CTE...
PROJECTOR B126	20 A		1	12	9		700			180		10	12	1		20 A	RECEPT, SCIENCE / ART / CTE...
PROJECTOR B127	20 A		1	12	11			700			180	12	12	1		20 A	RECEPT, WELLNESS B136
SPARE	20 A	--	1	--	13	0			0			14	--	1	--	20 A	SPARE
SPARE	20 A	--	1	--	15		0			0		16	--	1	--	20 A	SPARE
SPARE	20 A	--	1	--	17			0			0	18	--	1	--	20 A	SPARE
SPARE	20 A	--	1	--	19	0			0			20	--	1	--	20 A	SPARE
SPARE	20 A	--	1	--	21		0			0		22	--	1	--	20 A	SPARE
SPARE	20 A	--	1	--	23			0			0	24	--	1	--	20 A	SPARE
SPACE ONLY	--	--	1	--	25	--			--			26	--	1	--	--	SPACE ONLY
SPACE ONLY	--	--	1	--	27		--			--		28	--	1	--	--	SPACE ONLY
SPACE ONLY	--	--	1	--	29			--			--	30	--	1	--	--	SPACE ONLY
SPACE ONLY	--	--	1	--	31	--			--			32	--	1	--	--	SPACE ONLY
SPACE ONLY	--	--	1	--	33		--			--		34	--	1	--	--	SPACE ONLY
SPACE ONLY	--	--	1	--	35			--			--	36	--	1	--	--	SPACE ONLY
SPACE ONLY	--	--	1	--	37	--			--			38	--	1	--	--	SPACE ONLY
SPACE ONLY	--	--	1	--	39		--			--		40	--	1	--	--	SPACE ONLY
SPACE ONLY	--	--	1	--	41			--			--	42	--	1	--	--	SPACE ONLY

FEED THRU LOAD 0 VA

A	B	C	
1760	1760	1940	TOTAL (VA)
15 A	15 A	16 A	AMPS/PHASE

CONNECTED LOAD TOTAL 5460 VA

AIC RATING 22000 AMPS RMS SYSM.

Load Classification	Connected Load	Demand Factor	Estimated Demand	Panel Totals	
Other	4200 VA	100.00%	4200 VA		
RECEPT	1260 VA	100.00%	1260 VA	Total Conn. Load:	5460 VA
				Total Est. Demand:	5460 VA
				Total Conn. Current:	15 A
				Total Est. Demand Current:	15 A

NOTES:

CIRCUIT BREAKER TYPE:
<BLANK> THERMAL MAGNETIC CIRCUIT BREAKER
GF 5 mA GROUND FAULT CIRCUIT BREAKER
AF ARC-FAULT CIRCUIT BREAKER
CO COMBINATION AFCI/GFCI CIRCUIT BREAKER
EG 30 mA EQUIPMENT GROUND FAULT CIRCUIT BREAKER
ST SHUNT TRIP CIRCUIT BREAKER

PANELBOARD SCHEDULE

PANEL: L6 TYPE: Type 1 VOLTS: 120/208 Y PHASE: 3 WIRES: 4

MOUNTING: SURFACE LOCATION: STORAGE A109 MAINS: MLO

BUSSING: FED FROM: LDP

AMP: 225 A

___ SUBFEED LUGS
X DOOR-IN-DOOR
___ ISO GROUND
___ 200% NEUTRAL
___ SPD

BRANCH BREAKERS

ITEM	AMPS	TYPE	POLE	WIRE SIZE	CIR. NO.	A	B	C	A	B	C	CIR. NO.	WIRE SIZE	POLE	TYPE	AMPS	ITEM
RECEPT, STORAGE A109	20 A		1	12	1	720			720			2	12	1		20 A	RECEPT, MOTOR ROOM A110
RECEPT, SENSORY/BALL...	20 A		1	12	3		720			720		4	12	1		20 A	RECEPT, CONFERENCE A108
RECEPT, ADMIN OFFICE A107	20 A		1	12	5			900			900	6	12	1		20 A	RECEPT, ADMIN OFFICE A106
RECEPT, OFFICE A102	20 A		1	12	7	540			1800			8	12	1		20 A	RECEPT, RECEPTION A103
RECEPT, SANITARY A114	20 A		1	12	9		180			180		10	12	1		20 A	RECEPT, RECORDS A104
RECEPT, OFFICE A102	20 A		1	12	11			1080			1080	12	12	1		20 A	RECEPT, OFFICE A102
RECEPT, OFFICE A102	20 A		1	12	13	900			900			14	12	1		20 A	RECEPT, Room A100, A101, B100
RECEPT, CONFERENCE A155	20 A		1	12	15		720			900		16	12	1		20 A	RECEPT, Room A154, B100
RECEPT, OPEN A150	20 A		1	12	17			540			180	18	12	1		20 A	RECEPT, PRINT A153
RECEPT, SANITARY A114	20 A		1	12	19	900			500			20	12	1		20 A	Other, CONFERENCE A108
RECEPT, NURSE A115	20 A		1	12	21		1440			500		22	12	1		20 A	Other, WAITING A100
RECEPT, NURSE A113	20 A		1	12	23			1440			680	24	12	1		20 A	Other, RECEPT, CONFERENCE...
OPERABLE PARTITION	20 A		3	12	25	0			540			26	12	1		20 A	RECEPT, PRINT A153
--	--	--	--	--	27		0			540		28	12	1		20 A	RECEPT, RECEPTION A154
--	--	--	--	--	29			0			0	30	--	1	--	20 A	SPARE
OPERABLE PARTITION	20 A		3	12	31	480			0			32	--	1	--	20 A	SPARE
--	--	--	--	--	33		480			0		34	--	1	--	20 A	SPARE
--	--	--	--	--	35			480			0	36	--	1	--	20 A	SPARE
SPARE	20 A	--	1	--	37	0			0			38	--	1	--	20 A	SPARE
SPARE	20 A	--	1	--	39		0			0		40	--	1	--	20 A	SPARE
SPARE	20 A	--	1	--	41			0			0	42	--	1	--	20 A	SPARE

FEED THRU LOAD 0 VA

A	B	C	
8000	6380	7280	TOTAL (VA)
68 A	53 A	62 A	AMPS/PHASE

CONNECTED LOAD TOTAL 20220 VA

AIC RATING 22000 AMPS RMS SYSM.

Load Classification	Connected Load	Demand Factor	Estimated Demand	Panel Totals	
HVAC	0 VA	0.00%	0 VA		
Other	1500 VA	100.00%	1500 VA	Total Conn. Load:	20220 VA
RECEPT	18720 VA	76.71%	14360 VA	Total Est. Demand:	15860 VA
				Total Conn. Current:	56 A
				Total Est. Demand Current:	44 A

NOTES:

CIRCUIT BREAKER TYPE:
<BLANK> THERMAL MAGNETIC CIRCUIT BREAKER
GF 5 mA GROUND FAULT CIRCUIT BREAKER
AF ARC-FAULT CIRCUIT BREAKER
CO COMBINATION AFCI/GFCI CIRCUIT BREAKER
EG 30 mA EQUIPMENT GROUND FAULT CIRCUIT BREAKER
ST SHUNT TRIP CIRCUIT BREAKER

PANELBOARD GENERAL NOTES

1. PROVIDE EQUIPMENT LABELING PER SPECIFICATIONS 26 0553. THE LABEL SHALL IDENTIFY THE DEVICE OR EQUIPMENT WHERE THE POWER SUPPLE ORIGINATES, AND THE SYSTEM VOLTAGE, PHASE OR LINE AND SYSTEM AT TALL TERMINATION, CONNECTION, AND SPLICE POINTS. FOR EXAMPLE: FEEDER POWER SUPPLY FOR PANEL "XX" ORIGINATES AT PANEL "XX" (OR SWITCHBOARD "XX", TRANSFORMER "XX", SWITCH "XX", ETC.); 120/208 VOLTS, 3-PHASE, PHASE COLOR IDENTIFICATION (OR 120/240, 277/480, ETC.).
2. PROVIDE TYPED PANELBOARD INDEXES AS EACH PANELBOARD. FILL OUT PANELBOARD'S CIRCUIT DIRECTORY CARD UPON COMPLETION OF INSTALLATION WORK. UTILIZE ACTUAL FINAL BUILDING ROOM NUMBERS, NOT ARCHITECTURAL NUMBERS USED ON DRAWINGS. IDENTIFY INDIVIDUAL LIGHTING CIRCUITS, INDIVIDUAL RECEPTACLE CIRCUITS BY ROOM SERVER, LIGHTING CIRCUITS, INDIVIDUAL RECEPTACLE CIRCUITS BY ROOM NUMBERS AND EQUIPMENT NAMES. INCLUDE ROOM NUMBER WITH EQUIPMENT CIRCUIT DESIGNATIONS. ALL DIRECTORIES TO BE TYPEWRITTEN.
3. PROVIDE AIC AND ARC-FLASH HAZARD LABELS PER THE SPECIFICATIONS AND NEC.
4. ALL MECHANICAL AND KITCHEN EQUIPMENT BREAKERS TO BE SIZED PER THE MECHANICAL EQUIPMENT SCHEDULE AND KITCHEN EQUIPMENT SCHEDULE.
5. PROVIDE ALL REQUIRED LUG ADAPTERS, PIN REDUCERS, POLARIS LUG KITS, ETC. AS REQUIRED. PROVIDE NEC SIZED JUNCTION BOX AHEAD OF PANELBOARD/GEAR AS NEEDED TO LOCATED AND TERMINATE CONDUCTORS ON POLARIS LUG ADAPTERS (<10' FROM FINAL TERMINATION AT PANELBOARD). SIZE DOWN TO CONDUCTORS THAT FIT THE AVAILABLE LUGS AND/OR BREAKERS.

INDEX OF PANELBOARD SCHEDULE

L1	L3	L5
L2	L4	L6

MHTN ARCHITECTS
MHTN Architects, Inc.
280 South 400 West
Suite 250
Salt Lake City, Utah 84101
Telephone (801) 595-6700
www.mhtn.com

BNA CONSULTING
4225 Lake Park Blvd, Suite 275
West Valley City, UT 84120
P: 801.532.2196
F: 801.532.2305
www.bnaconsulting.com
SALT LAKE ST. GEORGE

JORDAN SCHOOL DISTRICT

JORDAN LEARNING CENTER

3706 WEST 9800 SOUTH
SOUTH JORDAN, UT 84009

©2023 MHTN ARCHITECTS, INC.

Confidentiality Notice:
This document is intended for use on the Project identified herein by individuals and companies involved in the design, permitting, bidding and construction of the Project. MHTN Architects, Inc. grants limited rights to distribute and reproduce this document for this express purpose only. Distribution, printing or copying this document for purposes other than those indicated is strictly prohibited. If a digital copy of this document is received in error, please delete it.

SEAL

PROFESSIONAL ENGINEER 8/29/2024 BRIAN HICKS No. 7709037-2202 STATE OF UTAH

MHTN PROJECT NO. 2024528

Original drawing is 30 x 42. Do not scale contents of this drawing.

REVISIONS
CONTRACTOR TO VERIFY DRAWINGS IN FIELD USE REFLECT LAST REVISION DATE.

NO.	DATE	DESCRIPTION

ISSUE
CONSTRUCTION DOCUMENTS
AUGUST 29, 2024

SHEET NAME
PANELBOARD SCHEDULES

SHEET NUMBER
E370

Autodesk Docs://2024528 JSD Retail Remodel/24133 - JSD LEARNING Center ELEC V24.rvt
8/28/2024 10:15:59 AM

PANELBOARD SCHEDULE

PANEL: EHL | TYPE: Type 1 | VOLTS: 480/277 Y | PHASE: 3 | WIRES: 4

MOUNTING: SURFACE | LOCATION: ELECTRICAL A142 | MAINS: MCB

BUSSING: | FED FROM: XFER SW | AMP: 60 A

____ SUBFEED LUGS
X DOOR-IN-DOOR
____ ISO GROUND
____ 200% NEUTRAL
____ SPD

BRANCH BREAKERS

ITEM	AMPS	TYPE	POLE	WIRE SIZE	CIR. NO.	A	B	C	A	B	C	CIR. NO.	WIRE SIZE	POLE	TYPE	AMPS	ITEM
Other	20 A		1	12	1	526			669			2	12	1		20 A	LIGHTING WORK ROOM A133
EXIT LIGHTING	20 A		1	12	3		390			263		4	12	1		20 A	LIGHTING
Room A154, A150	20 A		1	12	5			953			202	6	12	1		20 A	LIGHTING
ET1	30 A		3	10	7	1580			330			8	12	1		20 A	LIGHTING
--	--	--	--	--	9		500			252		10	12	1		20 A	LIGHTING
--	--	--	--	--	11			860			26	12	12	1		20 A	EXIT LIGHTING
LIGHTING	20 A		1	12	13	922			1750			14	12	1		20 A	LIGHTING
LIGHTING	20 A		1	12	15		560					16					
LIGHTING	20 A		1	12	17			3224				18					
LIGHTING	20 A		1	12	19	385						20					
LIGHTING	20 A		1	12	21		240			0		22	--	1	--	20 A	SPARE
SPARE	20 A	--	1	--	23			0			0	24	--	1	--	20 A	SPARE
SPARE	20 A	--	1	--	25	0			0			26	--	1	--	20 A	SPARE
SPARE	20 A	--	1	--	27		0			0		28	--	1	--	20 A	SPARE
SPARE	20 A	--	1	--	29			0			0	30	--	1	--	20 A	SPARE
SPACE ONLY	--	--	1	--	31	--			--			32	--	1	--	--	SPACE ONLY
SPACE ONLY	--	--	1	--	33		--			--		34	--	1	--	--	SPACE ONLY
SPACE ONLY	--	--	1	--	35			--			--	36	--	1	--	--	SPACE ONLY
SPACE ONLY	--	--	1	--	37	--			--			38	--	1	--	--	SPACE ONLY
SPACE ONLY	--	--	1	--	39		--			--		40	--	1	--	--	SPACE ONLY
SPACE ONLY	--	--	1	--	41			--			--	42	--	1	--	--	SPACE ONLY

FEED THRU LOAD 0 VA

A	B	C	
6162	2205	5265	TOTAL (VA)
24 A	8 A	21 A	AMPS/PHASE

CONNECTED LOAD TOTAL 12132 VA

AIC RATING 22000 AMPS RMS SYSM.

Load Classification	Connected Load	Demand Factor	Estimated Demand	Panel Totals	
LIGHTING	10632 VA	125.00%	13290 VA		
Other	60 VA	100.00%	60 VA	Total Conn. Load:	12132 VA
RECEPT	1440 VA	100.00%	1440 VA	Total Est. Demand:	14790 VA
				Total Conn. Current:	15 A
				Total Est. Demand Current:	18 A

NOTES:

CIRCUIT BREAKER TYPE:
<BLANK> THERMAL MAGNETIC CIRCUIT BREAKER
GF 5 mA GROUND FAULT CIRCUIT BREAKER
AF ARC-FAULT CIRCUIT BREAKER
CO COMBINATION AFCI/GFCI CIRCUIT BREAKER
EG 30 mA EQUIPMENT GROUND FAULT CIRCUIT BREAKER
ST SHUNT TRIP CIRCUIT BREAKER

PANELBOARD SCHEDULE

PANEL: H1 | TYPE: Type 1 | VOLTS: 480/277 Y | PHASE: 3 | WIRES: 4

MOUNTING: SURFACE | LOCATION: ELECTRICAL A142 | MAINS: MLO

BUSSING: | FED FROM: MDP | AMP: 225 A

____ SUBFEED LUGS
X DOOR-IN-DOOR
____ ISO GROUND
____ 200% NEUTRAL
____ SPD

BRANCH BREAKERS

ITEM	AMPS	TYPE	POLE	WIRE SIZE	CIR. NO.	A	B	C	A	B	C	CIR. NO.	WIRE SIZE	POLE	TYPE	AMPS	ITEM
LIGHTING, Room A116, A126	20 A		1	12	1	74			145			2	12	1		20 A	LIGHTING
LIGHTING	20 A		1	12	3		408			282		4	12	1		20 A	LIGHTING, Other, Room A150, A154
LIGHTING, Room A146, A147,...	20 A		1	12	5			1488			227	6	12	1		20 A	LIGHTING, OUTDOOR PLAY A156
LIGHTING, MULTIPURPOSE...	20 A		1	12	7	154			295			8	12	1		20 A	LIGHTING, Other, CONFERENCE...
LIGHTING, VIRTUAL SCHOOLS...	20 A		1	12	9		350			187		10	12	1		20 A	LIGHTING, MULTIPURPOSE B119
LIGHTING, Room A100, A103	20 A		1	12	11			415			715	12	12	1		20 A	LIGHTING
LIGHTING, Room B110, B115	20 A		1	12	13	887			1198			14	12	1		20 A	LIGHTING, MECH B134
LIGHTING	20 A		1	12	15		1137			857		16	12	1		20 A	LIGHTING
LIGHTING, CUSTODIAL B133	20 A		1	12	17			1234			1882	18	12	1		20 A	LIGHTING
LIGHTING	20 A		1	12	19	1445			1111			20	12	1		20 A	LIGHTING
LIGHTING, STUDENT...	20 A		1	12	21		1771			840		22	12	1		20 A	LIGHTING, CORRIDOR A140
LIGHTING	20 A		1	12	23			1059			3443	24	12	1		20 A	LIGHTING, Room A142, A144
SPARE	20 A	--	1	--	25	0			1394			26	12	1		20 A	LIGHTING
SPARE	20 A	--	1	--	27		0			0		28	--	1	--	20 A	SPARE
SPARE	20 A	--	1	--	29			0			0	30	--	1	--	20 A	SPARE
SPARE	20 A	--	1	--	31	0			0			32	--	1	--	20 A	SPARE
SPARE	20 A	--	1	--	33		0			0		34	--	1	--	20 A	SPARE
SPARE	20 A	--	1	--	35			0			0	36	--	1	--	20 A	SPARE
SPARE	20 A	--	1	--	37	0			0			38	--	1	--	20 A	SPARE
SPARE	20 A	--	1	--	39		0			0		40	--	1	--	20 A	SPARE
SPACE ONLY	--	--	1	--	41			--			--	42	--	1	--	--	SPACE ONLY
SPACE ONLY	--	--	1	--	43	--			--			44	--	1	--	--	SPACE ONLY
SPACE ONLY	--	--	1	--	45		--			--		46	--	1	--	--	SPACE ONLY
SPACE ONLY	--	--	1	--	47			--			--	48	--	1	--	--	SPACE ONLY
SPACE ONLY	--	--	1	--	49	--			--			50	--	1	--	--	SPACE ONLY
SPACE ONLY	--	--	1	--	51		--			--		52	--	1	--	--	SPACE ONLY
SPACE ONLY	--	--	1	--	53			--			--	54	--	1	--	--	SPACE ONLY
SPACE ONLY	--	--	1	--	55	--			--			56	--	1	--	--	SPACE ONLY
SPACE ONLY	--	--	1	--	57		--			--		58	--	1	--	--	SPACE ONLY
SPACE ONLY	--	--	1	--	59			--			--	60	--	1	--	--	SPACE ONLY

FEED THRU LOAD 0 VA

A	B	C	
6702	5832	10463	TOTAL (VA)
25 A	21 A	38 A	AMPS/PHASE

CONNECTED LOAD TOTAL 22997 VA

AIC RATING 30000 AMPS RMS SYSM.

Load Classification	Connected Load	Demand Factor	Estimated Demand	Panel Totals	
LIGHTING	22627 VA	125.00%	28284 VA		
Other	370 VA	100.00%	370 VA	Total Conn. Load:	22997 VA
				Total Est. Demand:	28654 VA
				Total Conn. Current:	28 A
				Total Est. Demand Current:	34 A

NOTES:

CIRCUIT BREAKER TYPE:
<BLANK> THERMAL MAGNETIC CIRCUIT BREAKER
GF 5 mA GROUND FAULT CIRCUIT BREAKER
AF ARC-FAULT CIRCUIT BREAKER
CO COMBINATION AFCI/GFCI CIRCUIT BREAKER
EG 30 mA EQUIPMENT GROUND FAULT CIRCUIT BREAKER
ST SHUNT TRIP CIRCUIT BREAKER

PANELBOARD SCHEDULE

PANEL: HM1 | TYPE: Type 1 | VOLTS: 480/277 Y | PHASE: 3 | WIRES: 4

MOUNTING: SURFACE | LOCATION: ELECTRICAL A142 | MAINS: MLO

BUSSING: | FED FROM: MDP | AMP: 225 A

____ SUBFEED LUGS
X DOOR-IN-DOOR
____ ISO GROUND
____ 200% NEUTRAL
____ SPD

BRANCH BREAKERS

ITEM	AMPS	TYPE	POLE	WIRE SIZE	CIR. NO.	A	B	C	A	B	C	CIR. NO.	WIRE SIZE	POLE	TYPE	AMPS	ITEM
RT-1	20 A		3		1	1995			2660			2		3		20 A	RT-19
--	--	--	--	--	3		1995			2660		4	--	--	--	--	--
--	--	--	--	--	5			1995			2660	6	--	--	--	--	--
RT-25	20 A		3		7	1995			1995			8		3		20 A	RT-24
--	--	--	--	--	9		1995			1995		10	--	--	--	--	--
--	--	--	--	--	11			1995			1995	12	--	--	--	--	--
RT-18	20 A		3		13	2660			1995			14		3		20 A	RT-23
--	--	--	--	--	15		2660			1995		16	--	--	--	--	--
--	--	--	--	--	17			2660			1995	18	--	--	--	--	--
RT-14	20 A		3		19	2660			2660			20		3		20 A	RT-16
--	--	--	--	--	21		2660			2660		22	--	--	--	--	--
--	--	--	--	--	23			2660			2660	24	--	--	--	--	--
RT-13	20 A		3		25	2660			2660			26		3		20 A	RT-20
--	--	--	--	--	27		2660			2660		28	--	--	--	--	--
--	--	--	--	--	29			2660			2660	30	--	--	--	--	--
RT-17	20 A		3		31	1995			2660			32		3		20 A	RT-11
--	--	--	--	--	33		1995			2660		34	--	--	--	--	--
--	--	--	--	--	35			1995			2660	36	--	--	--	--	--
RT-22	20 A		3		37	2660			1995			38		3		20 A	RT-10
--	--	--	--	--	39		2660			1995		40	--	--	--	--	--
--	--	--	--	--	41			2660			1995	42	--	--	--	--	--
RT-4	20 A		3		43	2660			1995			44		3		20 A	RT-21
--	--	--	--	--	45		2660			1995		46	--	--	--	--	--
--	--	--	--	--	47			2660			1995	48	--	--	--	--	--
SPARE	20 A	--	1	--	49	0			0			50	--	1	--	20 A	SPARE
SPARE	20 A	--	1	--	51		0			0		52	--	1	--	20 A	SPARE
SPARE	20 A	--	1	--	53			0			0	54	--	1	--	20 A	SPARE
SPARE	20 A	--	1	--	55	0			0			56	--	1	--	20 A	SPARE
SPARE	20 A	--	1	--	57		0			0		58	--	1	--	20 A	SPARE
SPARE	20 A	--	1	--	59			0			0	60	--	1	--	20 A	SPARE

FEED THRU LOAD 0 VA

A	B	C	
37911	37911	37911	TOTAL (VA)
137 A	137 A	137 A	AMPS/PHASE

CONNECTED LOAD TOTAL 113733 VA

AIC RATING 30000 AMPS RMS SYSM.

Load Classification	Connected Load	Demand Factor	Estimated Demand	Panel Totals	
HVAC	113733 VA	100.00%	113733 VA		
				Total Conn. Load:	113733 VA
				Total Est. Demand:	113733 VA
				Total Conn. Current:	137 A
				Total Est. Demand Current:	137 A

NOTES:

CIRCUIT BREAKER TYPE:
<BLANK> THERMAL MAGNETIC CIRCUIT BREAKER
GF 5 mA GROUND FAULT CIRCUIT BREAKER
AF ARC-FAULT CIRCUIT BREAKER
CO COMBINATION AFCI/GFCI CIRCUIT BREAKER
EG 30 mA EQUIPMENT GROUND FAULT CIRCUIT BREAKER
ST SHUNT TRIP CIRCUIT BREAKER

PANELBOARD SCHEDULE

PANEL: ELL | TYPE: Type 1 | VOLTS: 120/208 Y | PHASE: 3 | WIRES: 4

MOUNTING: SURFACE | LOCATION: ELECTRICAL A142 | MAINS: MLO

BUSSING: | FED FROM: TX-ELL | AMP: 125 A

____ SUBFEED LUGS
X DOOR-IN-DOOR
____ ISO GROUND
____ 200% NEUTRAL
____ SPD

BRANCH BREAKERS

ITEM	AMPS	TYPE	POLE	WIRE SIZE	CIR. NO.	A	B	C	A	B	C	CIR. NO.	WIRE SIZE	POLE	TYPE	AMPS	ITEM
RECEPT, MDF A147	20 A		1		1	360			0			2	--	1	--	20 A	SPARE
					3					0		4	--	1	--	20 A	SPARE
RECEPT, MDF A147	20 A		1		5			360			0	6	--	1	--	20 A	SPARE
RECEPT, MDF A147	20 A		1		7	720			0			8	--	1	--	20 A	SPARE
PSP	20 A		1		9		500			--		10	--	1	--	--	SPACE ONLY
ACS	20 A		1		11			500			--	12	--	1	--	--	SPACE ONLY
IDS	20 A		1		13	500			--			14	--	1	--	--	SPACE ONLY
SPARE	20 A	--	1	--	15		0			--		16	--	1	--	--	SPACE ONLY
SPARE	20 A	--	1	--	17			0			--	18	--	1	--	--	SPACE ONLY
SPARE	20 A	--	1	--	19	0			--			20	--	1	--	--	SPACE ONLY
SPARE	20 A	--	1	--	21		0			--		22	--	1	--	--	SPACE ONLY

FEED THRU LOAD 0 VA

A	B	C	
1580	500	860	TOTAL (VA)
14 A	4 A	8 A	AMPS/PHASE

CONNECTED LOAD TOTAL 1440 VA

AIC RATING 14000 AMPS RMS SYSM.

Load Classification	Connected Load	Demand Factor	Estimated Demand	Panel Totals	
RECEPT	1440 VA	100.00%	1440 VA		
				Total Conn. Load:	1440 VA
				Total Est. Demand:	1440 VA
				Total Conn. Current:	4 A
				Total Est. Demand Current:	4 A

NOTES:

CIRCUIT BREAKER TYPE:
<BLANK> THERMAL MAGNETIC CIRCUIT BREAKER
GF 5 mA GROUND FAULT CIRCUIT BREAKER
AF ARC-FAULT CIRCUIT BREAKER
CO COMBINATION AFCI/GFCI CIRCUIT BREAKER
EG 30 mA EQUIPMENT GROUND FAULT CIRCUIT BREAKER
ST SHUNT TRIP CIRCUIT BREAKER

PANELBOARD SCHEDULE

PANEL: LM1 | TYPE: Type 1 | VOLTS: 120/208 Y | PHASE: 3 | WIRES: 4

MOUNTING: SURFACE | LOCATION: ELECTRICAL A142 | MAINS: MLO

BUSSING: | FED FROM: LDP | AMP: 225 A

____ SUBFEED LUGS
X DOOR-IN-DOOR
____ ISO GROUND
____ 200% NEUTRAL
____ SPD

BRANCH BREAKERS

ITEM	AMPS	TYPE	POLE	WIRE SIZE	CIR. NO.	A	B	C	A	B	C	CIR. NO.	WIRE SIZE	POLE	TYPE	AMPS	ITEM
RECEPT	20 A		1	12	1	900			456			2	12	1		20 A	EF-10
RECEPT	20 A		1	12	3		540			456		4	12	1		20 A	EF-6
EF-9	20 A		1	12	5			456			456	6	12	1		20 A	EF-7
EF-11	20 A		1	12	7	696			456			8	12	1		20 A	EF-8
ACI - 2	20 A		2		9		83			600		10	12	1		20 A	GENERATOR HEATER
--	--	--	--	--	11			83			600	12	12	1		20 A	BATTERY CHARGER
ACI - 1	20 A		2		13	83			456			14	12	1		20 A	EF-4
--	--	--	--	--	15		83			456		16	12	1		20 A	EF-5
SPARE	20 A	--	1	--	17			0			0	18	--	1	--	20 A	SPARE
SPARE	20 A	--	1	--	19	0			0			20	--	1	--	20 A	SPARE
SPACE ONLY	--	--	1	--	21		--			0		22	--	1	--	20 A	SPARE
SPACE ONLY	--	--	1	--	23			--			0	24	--	1	--	20 A	SPARE
SPACE ONLY	--	--	1	--	25	--			0			26	--	1	--	20 A	SPARE
SPACE ONLY	--	--	1	--	27		--			0		28	--	1	--	20 A	SPARE
SPACE ONLY	--	--	1	--	29			--			--	30	--	1	--	--	SPACE ONLY
SPACE ONLY	--	--	1	--	31	--			--			32	--	1	--	--	SPACE ONLY
SPACE ONLY	--	--	1	--	33		--			--		34	--	1	--	--	SPACE ONLY
SPACE ONLY	--	--	1	--	35			--			--	36	--	1	--	--	SPACE ONLY
SPACE ONLY	--	--	1	--	37	--			--			38	--	1	--	--	SPACE ONLY
SPACE ONLY	--	--	1	--	39		--			--		40	--	1	--	--	SPACE ONLY
SPACE ONLY	--	--	1	--	41			--			--	42	--	1	--	--	SPACE ONLY

FEED THRU LOAD 0 VA

A	B	C	
3047	2218	1595	TOTAL (VA)
26 A	19 A	13 A	AMPS/PHASE

CONNECTED LOAD TOTAL 6861 VA

AIC RATING 22000 AMPS RMS SYSM.

Load Classification	Connected Load	Demand Factor	Estimated Demand	Panel Totals	
HVAC	4221 VA	100.00%	4221 VA		
RECEPT	2640 VA	100.00%	2640 VA	Total Conn. Load:	6861 VA
				Total Est. Demand:	6861 VA
				Total Conn. Current:	19 A
				Total Est. Demand Current:	19 A

NOTES:

CIRCUIT BREAKER TYPE:
<BLANK> THERMAL MAGNETIC CIRCUIT BREAKER
GF 5 mA GROUND FAULT CIRCUIT BREAKER
AF ARC-FAULT CIRCUIT BREAKER
CO COMBINATION AFCI/GFCI CIRCUIT BREAKER
EG 30 mA EQUIPMENT GROUND FAULT CIRCUIT BREAKER
ST SHUNT TRIP CIRCUIT BREAKER

PANELBOARD SCHEDULE

PANEL: LM2 | TYPE: Type 1 | VOLTS: 120/208 Y | PHASE: 3 | WIRES: 4

MOUNTING: SURFACE | LOCATION: MECH B134 | MAINS: MLO

BUSSING: | FED FROM: LDP | AMP: 225 A

____ SUBFEED LUGS
X DOOR-IN-DOOR
____ ISO GROUND
____ 200% NEUTRAL
____ SPD

BRANCH BREAKERS

ITEM	AMPS	TYPE	POLE	WIRE SIZE	CIR. NO.	A	B	C	A	B	C	CIR. NO.	WIRE SIZE	POLE	TYPE	AMPS	ITEM
, PREP & STORAGE B129	20 A		1	12	1	0			360			2	12	1		20 A	RECEPT, Room B131, B132
EF-12	20 A		1	12	3		696			456		4	12	1		20 A	EF-2
RECEPT, Room B130, B133,...	20 A		1	12	5			720			960	6	12	1		20 A	WH-1
CP-1	20 A		1	12	7	528			250			8	12	2		20 A	EUH-1
EUH-2	20 A		2	12	9		0			250		10	--	--	--	--	--
--	--	--	--	--	11			0			456	12	12	1		20 A	EF-3
BUS	20 A		2	6	13	750			456			14	12	1		20 A	EF-1
--	--	--	--	--	15		750			900		16	12	1		20 A	RECEPT
FIRE ALARM, MECH B134	20 A		1	12	17			500			1080	18	12	1		20 A	RECEPT
ACO - 1	20 A		2		19	1165			1080			20	12	1		20 A	RECEPT
--	--	--	--	--	21		1165			1165		22		2		20 A	ACO - 2
					23						1165	24	--	--	--	--	--
SPARE	20 A	--	1	--	25	0						26					
SPARE	20 A	--	1	--	27		0			0		28	--	1	--	20 A	SPARE
SPARE	20 A	--	1	--	29			0			0	30	--	1	--	20 A	SPARE
SPARE	20 A	--	1	--	31	0			0			32	--	1	--	20 A	SPARE
SPARE	20 A	--	1	--	33		0			0		34	--	1	--	20 A	SPARE
SPARE	20 A	--	1	--	35			0			0	36	--	1	--	20 A	SPARE
SPACE ONLY	--	--	1	--	37	--			0			38	--	1	--	20 A	SPARE
SPACE ONLY	--	--	1	--	39		--			--		40	--	1	--	--	SPACE ONLY
SPACE ONLY	--	--	1	--	41			--			--	42	--	1	--	--	SPACE ONLY

FEED THRU LOAD 0 VA

A	B	C	
4589	5382	4881	TOTAL (VA)
38 A	45 A	41 A	AMPS/PHASE

CONNECTED LOAD TOTAL 14351 VA

AIC RATING 22000 AMPS RMS SYSM.

Load Classification	Connected Load	Demand Factor	Estimated Demand	Panel Totals	
HVAC	8711 VA	100.00%	8711 VA		
POWER	1500 VA	100.00%	1500 VA	Total Conn. Load:	14351 VA
RECEPT	4140 VA	100.00%	4140 VA	Total Est. Demand:	14351 VA
				Total Conn. Current:	40 A
				Total Est. Demand Current:	40 A

NOTES:

CIRCUIT BREAKER TYPE:
<BLANK> THERMAL MAGNETIC CIRCUIT BREAKER
GF 5 mA GROUND FAULT CIRCUIT BREAKER
AF ARC-FAULT CIRCUIT BREAKER
CO COMBINATION AFCI/GFCI CIRCUIT BREAKER
EG 30 mA EQUIPMENT GROUND FAULT CIRCUIT BREAKER
ST SHUNT TRIP CIRCUIT BREAKER

PANELBOARD GENERAL NOTES

1. PROVIDE EQUIPMENT LABELING PER SPECIFICATIONS 26 0553. THE LABEL SHALL IDENTIFY THE DEVICE OR EQUIPMENT WHERE THE POWER SUPPLE ORIGINATES, AND THE SYSTEM VOLTAGE, PHASE OR LINE AND SYSTEM AT TALL TERMINATION, CONNECTION, AND SPLICE POINTS. FOR EXAMPLE: FEEDER POWER SUPPLY FOR PANEL "XX" ORIGINATES AT PANEL "XX" (OR SWITCHBOARD "XX", TRANSFORMER "XX", SWITCH "XX", ETC.); 120/208 VOLTS, 3-PHASE, PHASE COLOR IDENTIFICATION (OR 120/240, 277/480, ETC.).
2. PROVIDE TYPED PANELBOARD INDEXES AS EACH PANELBOARD. FILL OUT PANELBOARD'S CIRCUIT DIRECTORY CARD UPON COMPLETION OF INSTALLATION WORK. UTILIZE ACTUAL FINAL BUILDING ROOM NUMBERS, NOT ARCHITECTURAL NUMBERS USED ON DRAWINGS. IDENTIFY INDIVIDUAL LIGHTING CIRCUITS, INDIVIDUAL RECEPTACLE CIRCUITS BY ROOM SERVER, LIGHTING CIRCUITS, INDIVIDUAL RECEPTACLE CIRCUITS BY ROOM NUMBERS AND EQUIPMENT NAMES. INCLUDE ROOM NUMBER WITH EQUIPMENT CIRCUIT DESIGNATIONS. ALL DIRECTORIES TO BE TYPEWRITTEN.
3. PROVIDE AIC AND ARC-FLASH HAZARD LABELS PER THE SPECIFICATIONS AND NEC.
4. ALL MECHANICAL AND KITCHEN EQUIPMENT BREAKERS TO BE SIZED PER THE MECHANICAL EQUIPMENT SCHEDULE AND KITCHEN EQUIPMENT SCHEDULE.
5. PROVIDE ALL REQUIRED LUG ADAPTERS, PIN REDUCERS, POLARIS LUG KITS, ETC. AS REQUIRED. PROVIDE NEC SIZED JUNCTION BOX AHEAD OF PANELBOARD/GEAR AS NEEDED TO LOCATED AND TERMINATE CONDUCTORS ON POLARIS LUG ADAPTERS (<10' FROM FINAL TERMINATION AT PANELBOARD). SIZE DOWN TO CONDUCTORS THAT FIT THE AVAILABLE LUGS AND/OR BREAKERS.

INDEX OF PANELBOARD SCHEDULE

EHL	H1	HM1
ELL	LM1	LM2

MHTN ARCHITECTS
MHTN Architects, Inc.
280 South 400 West
Suite 250
Salt Lake City, Utah 84101
Telephone (801) 595-6700
www.mhtn.com

BNA CONSULTING
4225 Lake Park Blvd, Suite 275
West Valley City, UT 84120
P: 801.532.2196
F: 801.532.2305
www.bnaconsulting.com
SALT LAKE ST. GEORGE

JORDAN SCHOOL DISTRICT

JORDAN LEARNING CENTER

3706 WEST 9800 SOUTH
SOUTH JORDAN, UT 84009

©2023 MHTN ARCHITECTS, INC.
Confidentiality Notice:
This document is intended for use on the Project identified herein by individuals and companies involved in the design, permitting, bidding and construction of the Project. MHTN Architects, Inc. grants limited rights to distribute and reproduce this document for this express purpose only. Distribution, printing or copying this document for purposes other than those indicated is strictly prohibited. If a digital copy of this document is received in error, please delete it.

SEAL

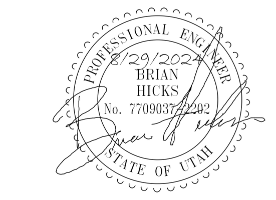

MHTN PROJECT NO. 2024528

Original drawing is 30 x 42. Do not scale contents of this drawing.

REVISIONS
CONTRACTOR TO VERIFY DRAWINGS IN FIELD USE REFLECT LAST REVISION DATE.

NO. △	DATE	DESCRIPTION

ISSUE
CONSTRUCTION DOCUMENTS
AUGUST 29, 2024

SHEET NAME
PANELBOARD SCHEDULES

SHEET NUMBER
E371

Autodesk Docs://2024528 JSD Retail Remodel/24133 - JSD LEARNING Center ELEC V24.rvt
8/28/2024 10:16:01 AM

PANELBOARD SCHEDULE

PANEL: HM2 **TYPE:** Type 1 **VOLTS:** 480/277 Y **PHASE:** 3 **WIRES:** 4

MOUNTING: SURFACE **LOCATION:** MECH B134 **MAINS:** MLO

BUSSING: **FED FROM:** MDP

AMP: 225 A

____ SUBFEED LUGS
__X__ DOOR-IN-DOOR
____ ISO GROUND
____ 200% NEUTRAL
____ SPD

BRANCH BREAKERS

ITEM	AMPS	TYPE	POLE	WIRE SIZE	CIR. NO.	A	B	C	A	B	C	CIR. NO.	WIRE SIZE	POLE	TYPE	AMPS	ITEM
RT-2	20 A		3		1	1995			2660			2		3		20 A	RT-9
--	--	--	--	--	3		1995			2660		4	--	--	--	--	--
--	--	--	--	--	5			1995			2660	6	--	--	--	--	--
RT-3	20 A		3		7	2660			2660			8		3		20 A	RT-8
--	--	--	--	--	9		2660			2660		10	--	--	--	--	--
--	--	--	--	--	11			2660			2660	12	--	--	--	--	--
RT-15	20 A		3		13	2660			2660			14		3		20 A	RT-7
--	--	--	--	--	15		2660			2660		16	--	--	--	--	--
--	--	--	--	--	17			2660			2660	18	--	--	--	--	--
RT-5	20 A		3		19	3769			1995			20		3		20 A	RT-12
--	--	--	--	--	21		3769			1995		22	--	--	--	--	--
--	--	--	--	--	23			3769			1995	24	--	--	--	--	--
RT-6	20 A		3		25	3769			1336			26		1		20 A	LIGHTING
--	--	--	--	--	27		3769			40		28		1		20 A	LIGHTING
--	--	--	--	--	29			3769			0	30	--	1	--	20 A	SPARE
SPARE	20 A	--	1	--	31	0			0			32	--	1	--	20 A	SPARE
SPARE	20 A	--	1	--	33		0			0		34	--	1	--	20 A	SPARE
SPARE	20 A	--	1	--	35			0			0	36	--	1	--	20 A	SPARE
SPARE	20 A	--	1	--	37	0			0			38	--	1	--	20 A	SPARE
SPARE	20 A	--	1	--	39		0			--		40	--	1	--	--	SPACE ONLY
SPARE	20 A	--	1	--	41			0			--	42	--	1	--	--	SPACE ONLY
SPACE ONLY	--	--	1	--	43	--			--			44	--	1	--	--	SPACE ONLY
SPACE ONLY	--	--	1	--	45		--			--		46	--	1	--	--	SPACE ONLY
SPACE ONLY	--	--	1	--	47			--			--	48	--	1	--	--	SPACE ONLY
SPACE ONLY	--	--	1	--	49	--			--			50	--	1	--	--	SPACE ONLY
SPACE ONLY	--	--	1	--	51		--			--		52	--	1	--	--	SPACE ONLY
SPACE ONLY	--	--	1	--	53			--			--	54	--	1	--	--	SPACE ONLY
SPACE ONLY	--	--	1	--	55	--			--			56	--	1	--	--	SPACE ONLY
SPACE ONLY	--	--	1	--	57		--			--		58	--	1	--	--	SPACE ONLY
SPACE ONLY	--	--	1	--	59			--			--	60	--	1	--	--	SPACE ONLY

FEED THRU LOAD
0 VA

26167	24871	24831	**TOTAL (VA)**
94 A	90 A	90 A	**AMPS/PHASE**

CONNECTED LOAD TOTAL
75868 VA

AIC RATING 30000 **AMPS RMS SYSM.**

Load Classification	Connected Load	Demand Factor	Estimated Demand	Panel Totals
HVAC	74492 VA	100.00%	74492 VA	
LIGHTING	1376 VA	125.00%	1720 VA	**Total Conn. Load:** 75868 VA
				Total Est. Demand: 76212 VA
				Total Conn. Current: 91 A
				Total Est. Demand Current: 92 A

NOTES:

CIRCUIT BREAKER TYPE:

<BLANK>	THERMAL MAGNETIC CIRCUIT BREAKER
GF	5 mA GROUND FAULT CIRCUIT BREAKER
AF	ARC-FAULT CIRCUIT BREAKER
CO	COMBINATION AFCI/GFCI CIRCUIT BREAKER
EG	30 mA EQUIPMENT GROUND FAULT CIRCUIT BREAKER
ST	SHUNT TRIP CIRCUIT BREAKER

PANELBOARD GENERAL NOTES

1. PROVIDE EQUIPMENT LABELING PER SPECIFICATIONS 26 0553. THE LABEL SHALL IDENTIFY THE DEVICE OR EQUIPMENT WHERE THE POWER SUPPLE ORIGINATES, AND THE SYSTEM VOLTAGE, PHASE OR LINE AND SYSTEM AT TALL TERMINATION, CONNECTION, AND SPLICE POINTS. FOR EXAMPLE: FEEDER POWER SUPPLY FOR PANEL "XX" ORIGINATES AT PANEL "XX" (OR SWITCHBOARD "XX", TRANSFORMER "XX", SWITCH "XX", ETC.); 120/208 VOLTS, 3-PHASE. PHASE COLOR IDENTIFICATION (OR 120/240, 277/480, ETC.).
2. PROVIDE TYPED PANELBOARD INDEXES AS EACH PANELBOARD. FILL OUT PANELBOARD'S CIRCUIT DIRECTORY CARD UPON COMPLETION OF INSTALLATION WORK. UTILIZE ACTUAL FINAL BUILDING ROOM NUMBERS, NOT ARCHITECTURAL NUMBERS USED ON DRAWINGS. IDENTIFY INDIVIDUAL LIGHTING CIRCUITS, INDIVIDUAL RECEPTACLE CIRCUITS BY ROOM SERVER, LIGHTING CIRCUITS, INDIVIDUAL RECEPTACLE CIRCUITS BY ROOM NUMBERS AND EQUIPMENT NAMES. INCLUDE ROOM NUMBER WITH EQUIPMENT CIRCUIT DESIGNATIONS. ALL DIRECTORIES TO BE TYPEWRITTEN.
3. PROVIDE AIC AND ARC-FLASH HAZARD LABELS PER THE SPECIFICATIONS AND NEC.
4. ALL MECHANICAL AND KITCHEN EQUIPMENT BREAKERS TO BE SIZED PER THE MECHANICAL EQUIPMENT SCHEDULE AND KITCHEN EQUIPMENT SCHEDULE.
5. PROVIDE ALL REQUIRED LUG ADAPTERS, PIN REDUCERS, POLARIS LUG KITS, ETC. AS REQUIRED. PROVIDE NEC SIZED JUNCTION BOX AHEAD OF PANELBOARD/GEAR AS NEEDED TO LOCATED AND TERMINATE CONDUCTORS ON POLARIS LUG ADAPTERS (<10' FROM FINAL TERMINATION AT PANELBOARD). SIZE DOWN TO CONDUCTORS THAT FIT THE AVAILABLE LUGS AND/OR BREAKERS.

INDEX OF PANELBOARD SCHEDULE

		HM2

MHTN ARCHITECTS
MHTN Architects, Inc.
280 South 400 West
Suite 250
Salt Lake City, Utah 84101
Telephone (801) 595-6700
www.mhtn.com

BNA CONSULTING
4225 Lake Park Blvd, Suite 275
West Valley City, UT 84120
P: 801.532.2196
F: 801.532.2305
www.bnaconsulting.com
SALT LAKE ST GEORGE

JORDAN SCHOOL DISTRICT

JORDAN LEARNING CENTER

3706 WEST 9800 SOUTH
SOUTH JORDAN, UT 84009

©2023 MHTN ARCHITECTS, INC.

Confidentiality Notice
This document is intended for use on the Project identified herein by individuals and companies involved in the design, permitting, bidding and construction of the Project. MHTN Architects, Inc. grants limited rights to distribute and reproduce this document for such purposes only. Any other distributing or reproducing of this document for purposes other than those indicated is strictly prohibited. If a digital copy of this document is received in error, please delete it.

SEAL

PROFESSIONAL ENGINEER
8/29/2024
BRIAN HICKS
No. 7709037-2202
STATE OF UTAH

MHTN PROJECT NO. 2024528

Original drawing is 30 x 42. Do not scale contents of this drawing.

REVISIONS
CONTRACTOR TO VERIFY DRAWINGS IN FIELD USE REFLECT LAST REVISION DATE.

NO.△	DATE	DESCRIPTION

ISSUE
CONSTRUCTION DOCUMENTS
AUGUST 29, 2024

SHEET NAME
PANEL BOARD SCHEDULES

SHEET NUMBER
E372

Autodesk Docs://2024528 JSD Retail Remodel/24133 - JSD_LEARNING Center ELEC V24.rvt
8/28/2024 10:10:02 AM

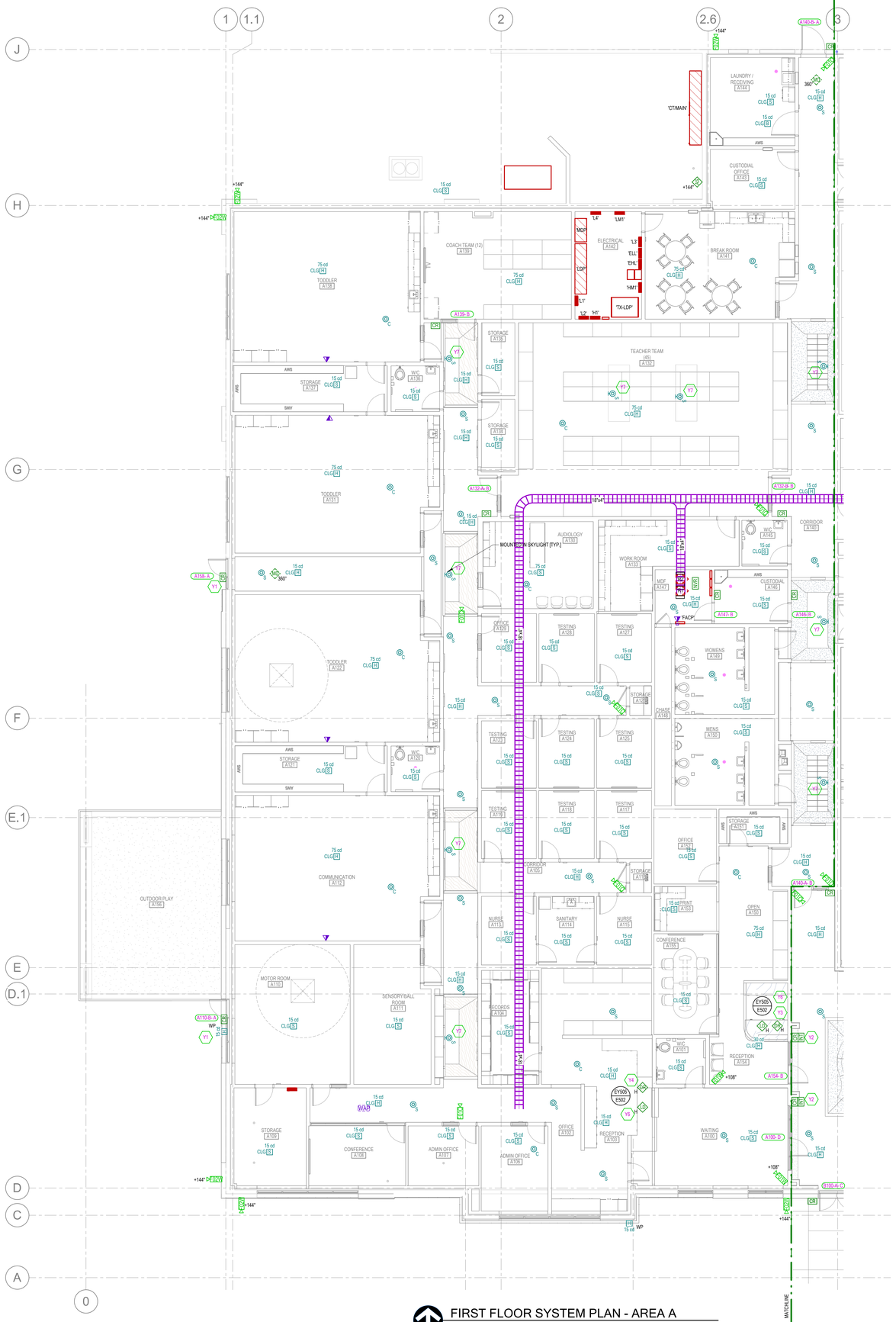

FIRST FLOOR SYSTEM PLAN - AREA A
SCALE = 1/8" = 1'-0"

SHEET KEYNOTES

Y1 MULLION MOUNTED CREDENTIAL CARD READER.

Y2 PRIOR TO STARTING ANY WORK OR ROUGH-IN COORDINATE WITH THE SCHOOL DISTRICT AND FIND OUT THE EXACT LOCATION AND THE MOUNTING HEIGHTS FOR THE SOLO INTERCOM DOOR STATIONS, AND DISCUSS THE OPERATIONAL REQUIREMENTS FOR EACH ONE. PROVIDE ALL OF THE NECESSARY CABLING THAT HOME RUNS BACK TO THE ACCESS CONTROL HEAD-END PANEL. THE VIDEO SURVEILLANCE NVR, AND TO THERE SIP PHONE SYSTEM. IT IS THE SECURITY CONTRACTOR IS RESPONSIBILITY TO PROVIDE A COMPLETE AND FULLY FUNCTIONING INTERCOM SYSTEM THAT MEETS THE MANUFACTURER'S SPECIFICATIONS AND OPERATES TO THE SCHOOL DISTRICTS REQUIREMENTS AND INSTRUCTIONS.

Y3 PRIOR TO STARTING ANY WORK OR ROUGH-IN COORDINATE A MEETING WITH THE SCHOOL DISTRICT AND THE MILLWORK DRAWINGS FOR THE EXACT LOCATION AND THE OPERATIONAL REQUIREMENTS FOR THE DOOR RELEASE BUTTON ON THE RECEPTIONIST DESK IN AREA #A154. PROVIDE ALL OF THE NECESSARY CABLING THAT WILL HOME RUN BACK TO THE ACCESS CONTROL HEAD-END PANEL. PROGRAM THE MOMENTARY DOOR RELEASE BUTTON TO OPERATE WITH THE ELECTRIFIED DOOR HARDWARE ON DOOR #A154. IT IS THE SECURITY CONTRACTOR RESPONSIBILITY TO PROVIDE A COMPLETE AND FULLY FUNCTIONING DOOR RELEASE SYSTEM THAT MEETS THE MANUFACTURER'S SPECIFICATIONS AND OPERATES TO THE SCHOOL DISTRICTS REQUIREMENTS AND INSTRUCTIONS.

Y4 PRIOR TO STARTING ANY WORK OR ROUGH-IN COORDINATE A MEETING WITH THE SCHOOL DISTRICT AND THE MILLWORK DRAWINGS FOR THE EXACT LOCATION AND THE OPERATIONAL REQUIREMENTS FOR THE DOOR RELEASE BUTTON ON THE RECEPTIONIST DESK IN AREA #A103. PROVIDE ALL OF THE NECESSARY CABLING THAT WILL HOME RUN BACK TO THE ACCESS CONTROL HEAD-END PANEL. PROGRAM THE MOMENTARY DOOR RELEASE BUTTON TO OPERATE WITH THE ELECTRIFIED DOOR HARDWARE ON DOOR #A100. IT IS THE SECURITY CONTRACTOR RESPONSIBILITY TO PROVIDE A COMPLETE AND FULLY FUNCTIONING DOOR RELEASE SYSTEM THAT MEETS THE MANUFACTURER'S SPECIFICATIONS AND OPERATES TO THE SCHOOL DISTRICTS REQUIREMENTS AND INSTRUCTIONS.

Y6 PRIOR TO STARTING ANY WORK OR ROUGH-IN COORDINATE A MEETING WITH THE SCHOOL DISTRICT AND THE MILLWORK DRAWINGS FOR THE EXACT LOCATION AND THE OPERATIONAL REQUIREMENTS FOR THE SCHOOL LOCKDOWN BUTTONS ON THE RECEPTIONIST DESKS. PROVIDE ALL OF THE NECESSARY CABLING THAT WILL HOME RUN BACK TO THE ACCESS CONTROL HEAD-END PANEL AND TO THE INTRUSION DETECTION HEAD-END PANEL. IT IS THE SECURITY CONTRACTOR RESPONSIBILITY TO PROVIDE A COMPLETE AND FULLY FUNCTIONING LOCKDOWN SYSTEM THAT MEETS THE MANUFACTURER'S SPECIFICATIONS AND OPERATES TO THE SCHOOL DISTRICTS REQUIREMENTS AND INSTRUCTIONS.

Y7 MOUNT SMOKE DETECTOR WITHIN SKYLIGHT. COORDINATE MOUNTING DETAILS WITH ARCHITECTURAL SKYLIGHT DETAIL.

MHTN ARCHITECTS

MHTN Architects, Inc.
280 South 400 West
Suite 250
Salt Lake City, Utah 84101
Telephone (801) 595-6700
www.mhtn.com

BNA CONSULTING
4225 Lake Park Blvd, Suite 275
West Valley City, UT 84120
P: 801.532.2196
F: 801.532.2305
www.bnaconsulting.com

JORDAN SCHOOL DISTRICT

JORDAN LEARNING CENTER

3706 WEST 9800 SOUTH
SOUTH JORDAN, UT 84009

©2023 MHTN ARCHITECTS, INC.

Confidentiality Notice:
This document is intended for use on the Project identified herein by individuals who are participating in the design, permitting, bidding and construction of the Project. MHTN Architects, Inc. grants limited rights to distribute and reproduce this document for this express purpose only. Distribution, printing or copying this document for purposes other than those indicated is strictly prohibited. If a digital copy of this document is received in error, please delete it.

SEAL

PROFESSIONAL ENGINEER
8/29/2024
BRIAN HICKS
7398035
STATE OF UTAH

MHTN PROJECT NO. 2024528

Original drawing is 30 x 42. Do not scale contents of this drawing.

REVISIONS
CONTRACTOR TO VERIFY DRAWINGS IN FIELD USE REFLECT LAST REVISION DATE.

NO.	DATE	DESCRIPTION

ISSUE
CONSTRUCTION DOCUMENTS
AUGUST 29, 2024

SHEET NAME
FIRST FLOOR SYSTEM PLAN - AREA A

SHEET NUMBER
E411A

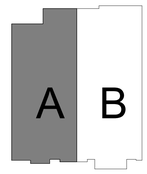

KEY PLAN

Autodesk Docs://2024528 JSD Retail Remodel/24133 - JSD - LEARNING Center ELEC V24.rvt
8/28/2024 10:16:56 AM

FIRST FLOOR SYSTEM PLAN - AREA B

SCALE = 1/8" = 1'-0"

SHEET KEYNOTES

Y1 MULLION MOUNTED CREDENTIAL CARD READER.

Y2 PRIOR TO STARTING ANY WORK OR ROUGH-IN COORDINATE WITH THE SCHOOL DISTRICT AND FIND OUT THE EXACT LOCATION AND THE MOUNTING HEIGHTS FOR THE SOLO INTERCOM DOOR STATIONS, AND DISCUSS THE OPERATIONAL REQUIREMENTS FOR EACH ONE. PROVIDE ALL OF THE NECESSARY CABLING THAT HOME RUNS BACK TO THE ACCESS CONTROL HEAD-END PANEL. THE VIDEO SURVEILLANCE NVR, AND TO THERE SIP PHONE SYSTEM. IT IS THE SECURITY CONTRACTOR IS RESPONSIBILITY TO PROVIDE A COMPLETE AND FULLY FUNCTIONING INTERCOM SYSTEM THAT MEETS THE MANUFACTURER'S SPECIFICATIONS AND OPERATES TO THE SCHOOL DISTRICTS REQUIREMENTS AND INSTRUCTIONS.

Y3 PRIOR TO STARTING ANY WORK OR ROUGH-IN COORDINATE A MEETING WITH THE SCHOOL DISTRICT AND THE MILLWORK DRAWINGS FOR THE EXACT LOCATION AND THE OPERATIONAL REQUIREMENTS FOR THE DOOR RELEASE BUTTON ON THE RECEPTIONIST DESK IN AREA #A154. PROVIDE ALL OF THE NECESSARY CABLING THAT WILL HOME RUN BACK TO THE ACCESS CONTROL HEAD-END PANEL. PROGRAM THE MOMENTARY DOOR RELEASE BUTTON TO OPERATE WITH THE ELECTRIFIED DOOR HARDWARE ON DOOR #A154. IT IS THE SECURITY CONTRACTOR RESPONSIBILITY TO PROVIDE A COMPLETE AND FULLY FUNCTIONING DOOR RELEASE SYSTEM THAT MEETS THE MANUFACTURER'S SPECIFICATIONS AND OPERATES TO THE SCHOOL DISTRICTS REQUIREMENTS AND INSTRUCTIONS.

Y7 MOUNT SMOKE DETECTOR WITHIN SKYLIGHT. COORDINATE MOUNTING DETAILS WITH ARCHITECTURAL SKYLIGHT DETAIL.

Y8 FIRE RISER LOCATION. PROVIDE REQUIRED QUANTITY OF MONITOR MODULES, CONTROL MODULES, TAMPER SWITCHES, AND FLOW SWITCHES FOR A COMPLETE AND WORKING SYSTEM. REVIEW FIRE PROTECTION DRAWINGS PRIOR TO BIDDING.

MHTN ARCHITECTS

MHTN Architects, Inc.
280 South 400 West
Suite 250
Salt Lake City, Utah 84101
Telephone (801) 595-6700
www.mhtn.com

BNA CONSULTING
4225 Lake Park Blvd, Suite 275
West Valley City, UT 84120
P: 801.532.2196
F: 801.532.2305
www.bnaconsulting.com
SALT LAKE ST.GEORGE

JORDAN SCHOOL DISTRICT

JORDAN LEARNING CENTER

3706 WEST 9800 SOUTH
SOUTH JORDAN, UT 84009

©2023 MHTN ARCHITECTS, INC.

Confidentiality Notice
This document is intended for use on the Project identified herein by individuals and companies involved in the design, permitting, bidding and construction of the Project. MHTN Architects, Inc. grants limited rights to distribute and reproduce this document for the purposes of the Project only. Distributing or reproducing this document for purposes other than those indicated is strictly prohibited. If a digital copy of this document is received in error, please delete it.

SEAL

MHTN PROJECT NO. 2024528

Original drawing is 30 x 42. Do not scale contents of this drawing.

REVISIONS
CONTRACTOR TO VERIFY DRAWINGS IN FIELD USE REFLECT LAST REVISION DATE.

NO.	DATE	DESCRIPTION

ISSUE
CONSTRUCTION DOCUMENTS
AUGUST 29, 2024

SHEET NAME
FIRST FLOOR SYSTEM PLAN -AREA B

SHEET NUMBER
E411B

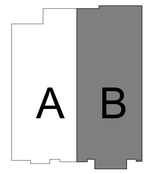

KEY PLAN

Autodesk Docs://2024528 JSD Retail Remodel/24133 - JSD LEARNING Center ELEC V24.rvt
9/26/2024 10:16:16 AM

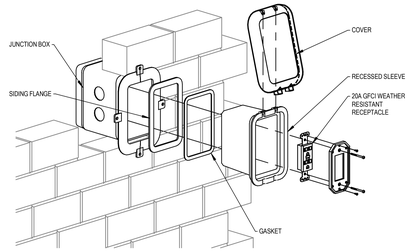

DIAGRAM L009 RECESSED IN-USE RECEPTACLE & COVER
NTS

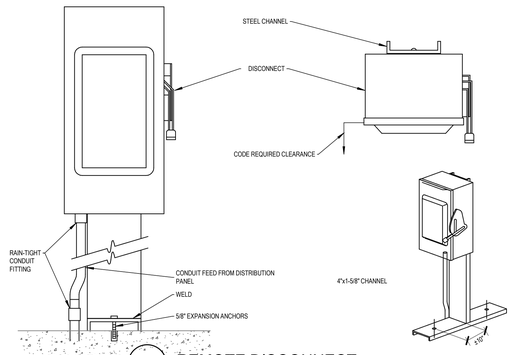

DIAGRAM M001 REMOTE DISCONNECT
NTS

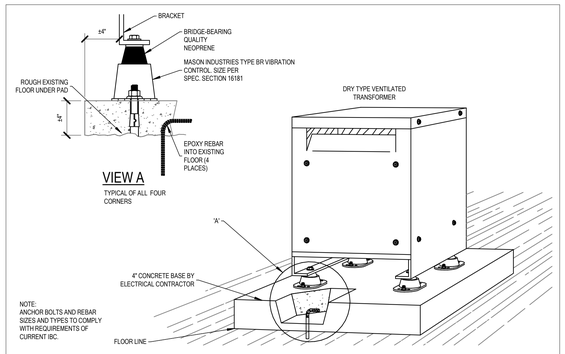

DIAGRAM Q009 DRY TYPE TRANSFORMER MOUNTING
NTS

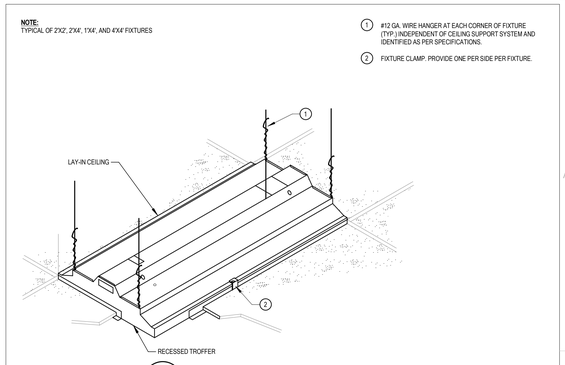

DIAGRAM A001 TYP. RECESSED FIXTURE MOUNTING
NTS

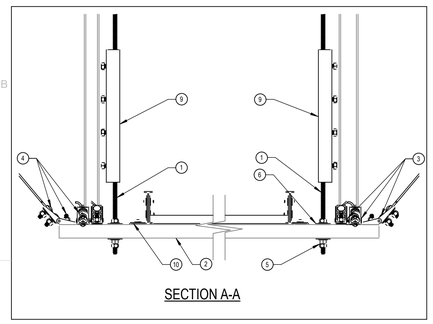

SECTION A-A

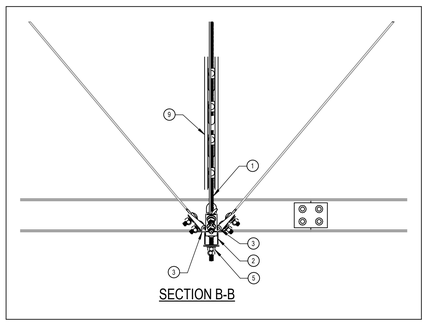

SECTION B-B

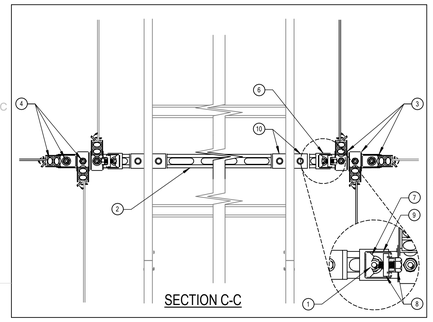

SECTION C-C

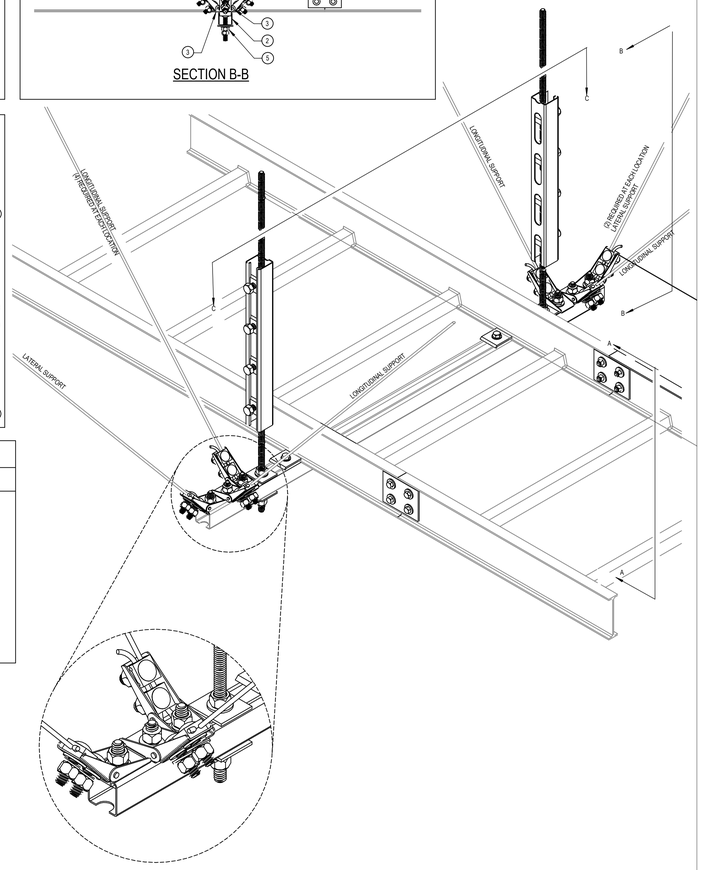

PARTS LIST

ITEM No.	DESCRIPTION	SIZE	CATALOG No. UNISTRUT
1	THREADED ROD (MIN. MODULUS OF OF ELASTICITY = 29x10 LBS/IN)	SEE SCHEDULE FOR DIAMETER	
2	METAL FRAMING CHANNEL	1-5/8"x1-5/8"	
3	CABLE BRACE SWIVEL ANCHOR	SEE TABLE	
4	HEX HEAD CAP SCREW WITH SPRING NUT	1/2"-13"	
5	FLAT WASHER WITH HEX NUT	3/8"	
6	FLAT PLATE FITTING WITH HEX NUT	3/8" OR 1/2" AS REQ'D	
7	CRADLE	-	
8	HEX HEAD CAP SCREW WITH NUT	3/8"x1"	
9	SLOTTED METAL FRAMING CHANNEL	1-5/8"x1-5/8"	
10	CABLE TRAY ATTACHMENT CLIP W/CAP SCREW & NUT	-	

NOTES:

1. PROVIDE LONGITUDINAL AND LATERAL SUPPORT SPACING IN ACCORDANCE WITH THE FOLLOWING:

MAX. CABLE TRAY PLUS CABLE WT.	VERTICAL SUPPORT SPACING	LATERAL SUPPORT SPACING	LONGITUDINAL SUPPORT SPACING	ROD DIAMETER	CABLE BRACE SWIVEL ANCHOR & CABLE
POUNDS/FOOT	FEET	FEET	FEET	INCHES	
25	10	10	20	.375	SCB2
50	10	10	20	.500	SCB3

2. PROVIDE METAL FRAMING CHANNEL ON ALL VERTICAL SUPPORTS WHEN ROD LENGTH EXCEEDS 14". STIFFENER CLIP SPACING SHALL BE 12".
3. SEE SPECIFICATIONS FOR APPROVED FITTINGS FOR ATTACHMENT TO STRUCTURE.

GENERAL NOTES

1. COORDINATE ROUTING OF CABLE TRAYS AND SUPPORT SYSTEMS WITH DIVISION 23.
2. DO NOT SUPPORT FROM BOTTOM CORD OF STEEL TRUSSES.

DIAGRAM H006 SEISMIC BRACING FOR CABLE TRAY/CABLES
NTS

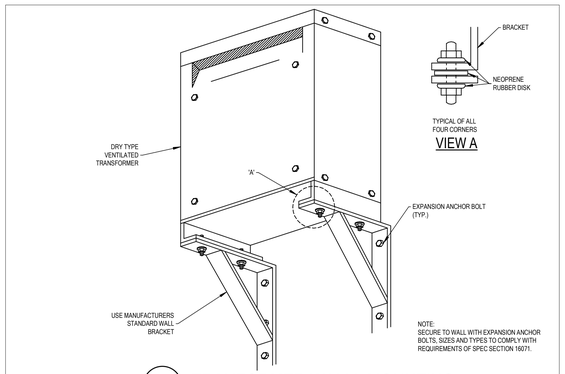

DIAGRAM Q002 TRANFORMER WALLL MOUNTING
NTS

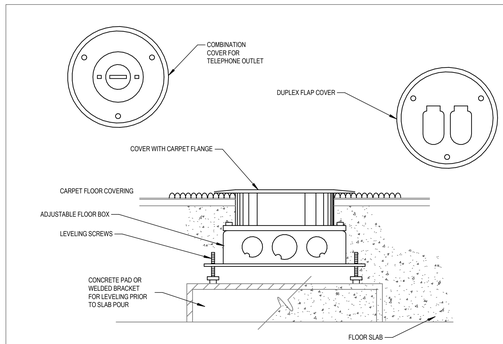

DIAGRAM L005 FLOOR BOX INSTALLATION ABOVE GROUND SLAB
NTS

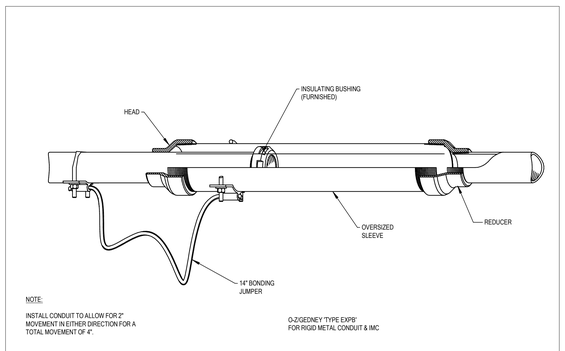

DIAGRAM H009 EXPANSION & PULL BOX FITTING
NTS

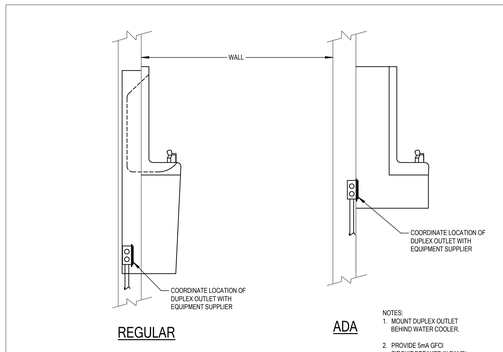

DIAGRAM R002 ELECTRIC WATER COOLER (EWC)
NTS

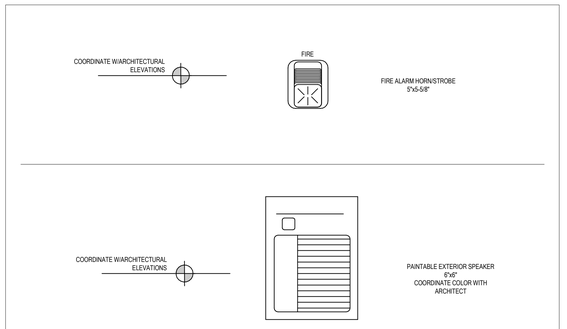

DIAGRAM D007 EXTERIOR FIRE ALARM HORN/STROBE & SPEAKER
NTS

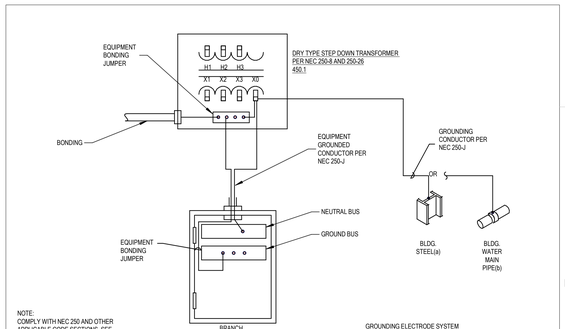

DIAGRAM Q011 STEP DOWN TRANSFORMER GROUNDING
NTS

MHTN ARCHITECTS
MHTN Architects, Inc.
280 South 400 West
Suite 250
Salt Lake City, Utah 84101
Telephone (801) 595-6700
www.mhtn.com

BNA CONSULTING
4225 Lake Park Blvd, Suite 275
West Valley City, UT 84120
P: 801.532.2196
F: 801.532.2305
www.bnaconsulting.com
SALT LAKE ST GEORGE

JORDAN SCHOOL DISTRICT

JORDAN LEARNING CENTER

3706 WEST 9800 SOUTH
SOUTH JORDAN, UT 84009

©2023 MHTN ARCHITECTS, INC.
Confidentiality Notice
This document is intended for use on the Project identified herein by individuals and companies involved in the design, permitting, bidding and construction of the Project. MHTN Architects, Inc. grants limited rights to distribute and reproduce this document for such purposes only. Any other distribution or reproduction of this document for purposes other than those indicated is strictly prohibited. If a digital copy of this document is received in error, please delete it.

SEAL

MHTN PROJECT NO. 2024528

Original drawing is 30 x 42. Do not scale contents of this drawing.

REVISIONS
CONTRACTOR TO VERIFY DRAWINGS IN FIELD USE REFLECT LAST REVISION DATE.

NO.△	DATE	DESCRIPTION

ISSUE
CONSTRUCTION DOCUMENTS
AUGUST 29, 2024

SHEET NAME
ELECTRICAL DIAGRAMS

SHEET NUMBER
E501

Autodesk Docs://2024528 -JSD Retail Remodel/24133 - JSD - LEARNING Center ELEC - V24.rvt
8/28/2024 10:10:12 AM

DIAGRAM KEYNOTES:

1. MOUNT ACCESS CONTROL DOOR CONTACT & INTRUSION DETECTION DOOR CONTACT 3-6" AWAY FROM LATCHING SIDE OF DOOR.
2. REFER TO DIV.8 SPECIFICATIONS FOR ADA EQUIPMENT TYPES, AND POWER SHEET PLANS FOR DEVICE LOCATIONS. PROVIDE 3/4" CONDUIT FROM ADA TO 4SQ J-BOX WITH COVER LOCATED IN ACCESSIBLE CEILING SPACE ON SECURE SIDE OF DOOR.
3. PROVIDE MANUFACTURER SUGGESTED J-BOX WITH 3/4" CONDUIT FROM ELECTRIFIED DOOR HARDWARE EQUIPMENT AND ANY OTHER INSTALLED END DEVICES TO 4SQ J-BOX W/ COVER LOCATED IN ACCESSIBLE CEILING SPACE ON SECURE SIDE OF DOOR.
4. PROVIDE HORIZONTAL SINGLE GANG J-BOX WITH 3/4" CONDUIT FOR REQUEST TO EXIT MOTION.
5. PROVIDE 4SQ J-BOX WITH VERTICAL SINGLE GANG MUD RING AND 3/4" CONDUIT FOR STANDARD SIZE CREDENTIAL CARD READER.
6. ROUTE DEVICE CABLING THROUGH DOOR FRAME OR MULLIONS. MOUNT DEVICES DIRECTLY TO THE DOOR FRAME OR MULLION WITHOUT J-BOX.
7. PROVIDE SPECIFIED J-HOOKS OR CONDUIT.
8. PROVIDE EXTERIOR CABLING QUICK-DISCONNECT AT THE TOP OF DOOR FRAME FOR ELECTRIC STRIKE(S) ON REMOVABLE MULLIONS.
9. ELECTRIC POWER TRANSFER HING / ELECTRIC HINGE / ELECTRIC POWER TRANSFER LOOP (SEE DIV.8 SPEC).

NOTE: DEVICES SHOWN ON THESE DIAGRAMS ARE NOT TO SCALE AND ANY/ALL MAY OR MAY NOT BE REQUIRED. DIAGRAM REPRESENTS TYPICAL ROUGH-IN AND DEVICE LOCATIONS. CONTRACTOR MUST REFER TO DIV. 8 SPECIFICATIONS FOR ELECTRIFIED DOOR EQUIPMENT TYPES AND THE SECURITY DRAWINGS FOR ACCESS CONTROL DEVICE LOCATIONS.

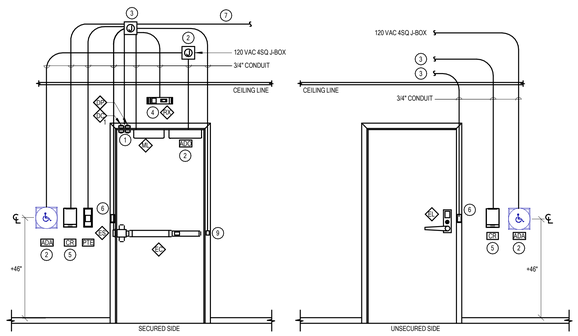

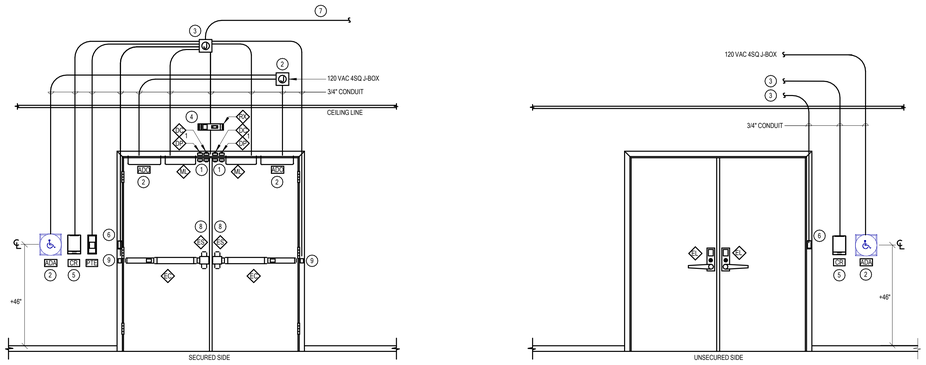

DIAGRAM EY101 TYPICAL ACCESS CONTROL & ELECTRIFIED DOOR HARDWARE DIAGRAMS
NTS

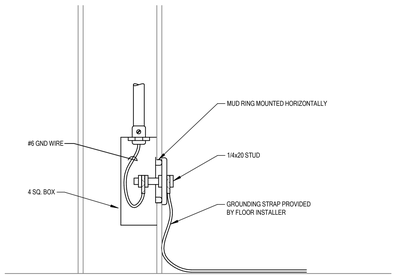

DIAGRAM F014 GROUNDING
NTS

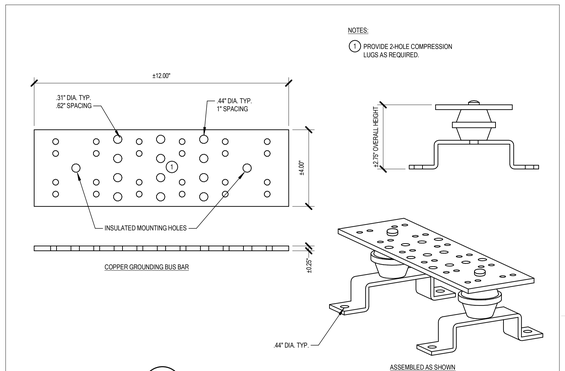

DIAGRAM F018 GROUNDING BUS BAR "TMGB"
NTS

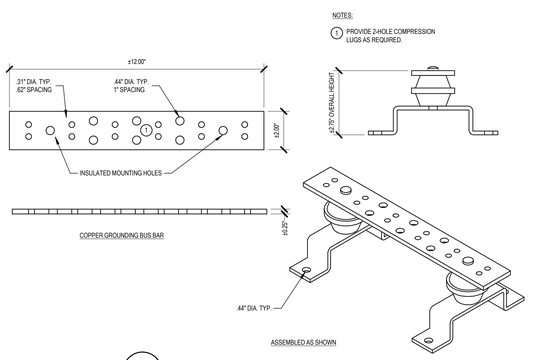

DIAGRAM F019 GROUNDING BUS BAR "IBT"
NTS

NOTES:

TMGB - TELECOMMUNICATIONS MAIN GROUNDING BUS.
IBT - INTERSYSTEM BONDING TERMINAL.
HC - HORIZONTAL CROSS-CONNECT ROOM.
MC - MAIN CROSS-CONNECT ROOM.
TGB - TELECOMMUNICATIONS GROUNDING BUS.
TBB - TELECOMMUNICATIONS BONDING BACKBONE.
BC - BONDING CONDUCTOR.
TR - TELECOMMUNICATIONS ROOM.
EF - ENTRANCE FACILITY.
MBJ - MAIN BONDING JUMPER.
EGB - EQUIPMENT GROUNDING BUS.

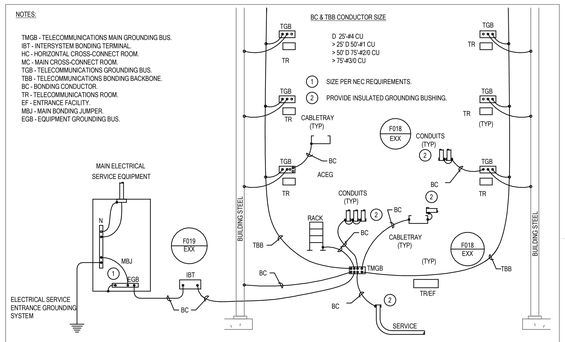

DIAGRAM F021 TYPICAL LARGE TELECOMMUNICATIONS SYSTEM GROUNDING/BONDING
NTS

DIAGRAM NOTE:

1. PROVIDE A 3/4" CONDUIT FROM J-BOX TO ACCESSIBLE CEILING SPACE. PROVIDE SPECIFIED CABLE RACEWAY TO ROUTE CABLING TO DESIGNATED CONTROL PANELS WITH CABLE SERVICE LOOPS ON EACH END.

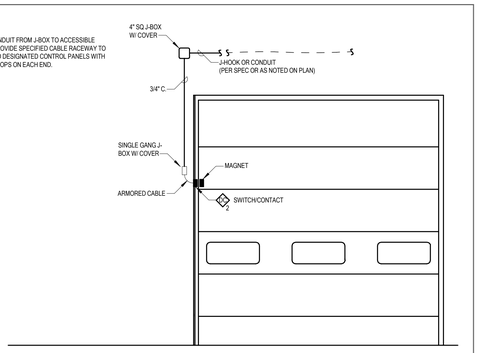

DIAGRAM EY104 TYPICAL GARAGE DOOR WITH CONTACT
NTS

DIAGRAM NOTE:

1. DEVICES SHOWN DIAGRAMMATICALLY ONLY.
2. PROVIDE 2" CONDUIT(S) UP TO ACCESSIBLE CEILING SPACE FROM THE ACCESS CONTROL HEAD-END PANEL(S). CONDUIT FILL RATIO IS NOT TO EXCEED 40%.

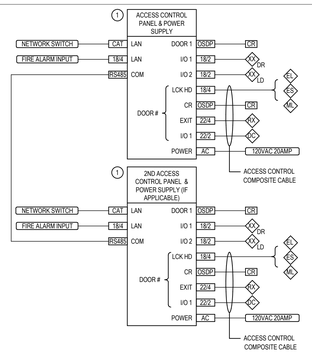

DIAGRAM EY002 TYPICAL ACCESS CONTROL - ONE LINE DIAGRAM
NTS

DIAGRAM NOTE:

1. ROUTE CABLING IN A 3/4" CONDUIT TO ACCESSIBLE CEILING SPACE. PROVIDE SPECIFIED CABLE RACEWAY TO ROUTE CABLING TO DESIGNATED CONTROL PANELS WITH CABLE SERVICE LOOPS ON EACH END.
2. PROVIDE 3/4 CONDUIT DOWN TO J-BOX, COVER, & GROMMET IF DESK IS +12" AWAY.
3. PROVIDE 3/4 CONDUIT DOWN TO CONCEALED CONDUIT IF DESK IS +12" FROM WALL. PROVIDE STUB-UP UNDERNEATH OR INTO MILLWORK LOCATION. COORDINATE WITH OWNER AND MILLWORK PLANS PRIOR TO STARTING INSTALLATION.

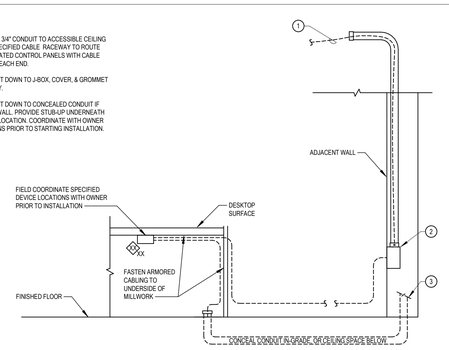

DIAGRAM EY505 TYPICAL MILLWORK SECURITY DEVICES
NTS

NOTES:

1. ALL CONDUIT AND WIRE BY DIVISION 16.
2. ALL LOW VOLTAGE CONNECTIONS AND HARDWARE BY OTHERS.
3. COORDINATE WITH HARDWARE INSTALLER FOR EXACT LOCATION OF ACTUATORS, OPERATORS AND ANY ADDITIONAL REQUIREMENTS.
4. SEE DOOR HARDWARE SPECIFICATIONS FOR WIRE REQUIREMENTS.
5. PROVIDE CONNECTION TO DOOR OPENER/ACTUATOR TO ACCESS CONTROL SYSTEM. PROGRAM CARD READER AND ADA OPERATOR PER OWNERS REQUIREMENTS.

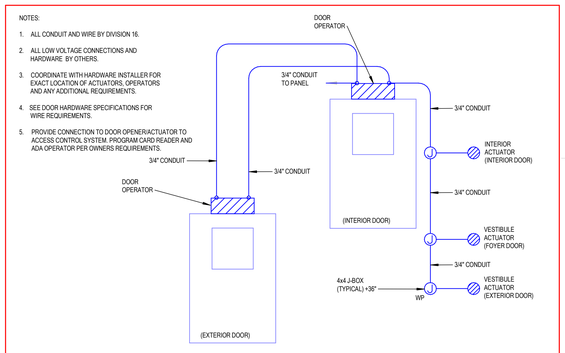

DIAGRAM E021 ADA ENTRY SHEETS
NTS

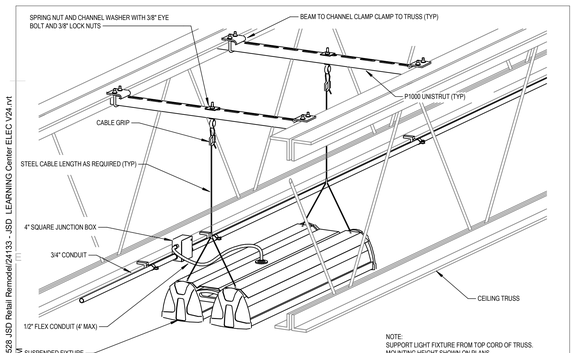

DIAGRAM A024 SUSPENDED LIGHT FIXTURE
NTS

DIAGRAM KEYNOTES:

1. PROVIDE ONE 3/4" CONDUIT FROM THE MANUFACTURER'S SUGGESTED J-BOX UP INTO ACCESSIBLE CEILING SPACE. PROVIDE CONDUIT OR J-HOOKS PER SPEC. ROUTE CABLING TO THE ASSIGNED EQUIPMENT COMMUNICATIONS RACK. PROVIDE INDUSTRY STANDARD SERVICE LOOPS ON EACH END OF THE CABLING.
2. CABLE SERVICE LOOP.
3. PROVIDE MANUFACTURER'S SUGGESTED J-BOX & WALL / CEILING SUPPORTS.

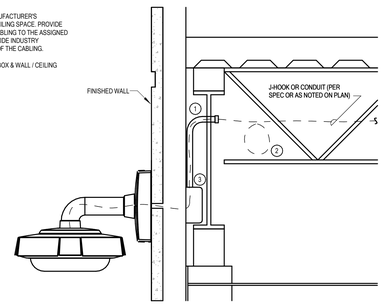

DIAGRAM EY403 TYPICAL EXTERIOR CAMERA MOUNT
NTS

DIAGRAM NOTE:

PROVIDE A 3/4" CONDUIT FROM MANUFACTURER'S SUGGESTED J-BOX TO ACCESSIBLE CEILING SPACE. PROVIDE SPECIFIED CABLE RACEWAY TO ROUTE CABLING TO DESIGNATED EQUIPMENT RACK WITH CABLE SERVICE LOOPS ON EACH END.

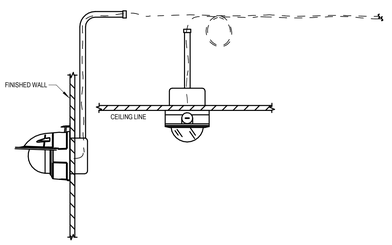

DIAGRAM EY401 TYPICAL CAMERA MOUNTING
NTS

DIAGRAM NOTES:

1. CAMERAS SHOWN DIAGRAMMATICALLY ONLY.
2. REFER TO THE SECURITY PLANS FOR SURVEILLANCE CAMERA LOCATIONS.

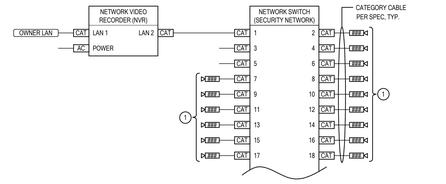

DIAGRAM EY001 TYPICAL VIDEO SURVEILLANCE SYSTEM - ONE LINE DIAGRAM
NTS

MHTN ARCHITECTS
MHTN Architects, Inc.
280 South 400 West
Suite 250
Salt Lake City, Utah 84101
Telephone (801) 595-6700
www.mhtn.com

BNA CONSULTING
4225 Lake Park Blvd, Suite 275
West Valley City, UT 84120
P: 801.532.2196
F: 801.532.2305
www.bnaconsulting.com
SALT LAKE ST. GEORGE

JORDAN SCHOOL DISTRICT

JORDAN LEARNING CENTER

3706 WEST 9800 SOUTH
SOUTH JORDAN, UT 84095

©2023 MHTN ARCHITECTS, INC.

Confidentiality Notice:
This document is intended for use on the Project identified herein by individuals and companies involved in the design, permitting, bidding and construction of the Project. MHTN Architects, Inc. grants limited rights to distribute and reproduce this document for this express purpose only. Distribution, printing or copying this document for purposes other than those indicated is strictly prohibited. If a digital copy of this document is received in error, please delete it.

SEAL

MHTN PROJECT NO. 2024528

Original drawing is 30 x 42. Do not scale contents of this drawing.

REVISIONS
CONTRACTOR TO VERIFY DRAWINGS IN FIELD. USE REFLECT LAST REVISION DATE.

NO.	DATE	DESCRIPTION

ISSUE
CONSTRUCTION DOCUMENTS
AUGUST 29, 2024

SHEET NAME
ELECTRICAL DIAGRAMS

SHEET NUMBER
E502

Autodesk Docs://2024528 JSD Retail Remodel/24133 - JSD_LEARNING Center ELEC V24.rvt
8/29/2024 10:16:14 AM

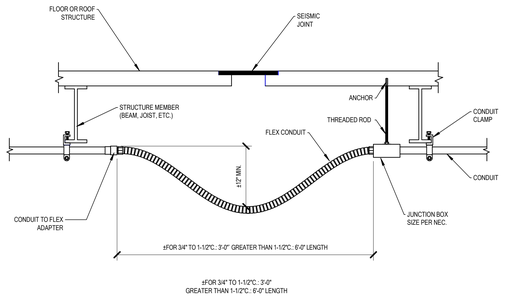

DIAGRAM H010 CONDUIT CROSSING SEISMIC JOINT
NTS

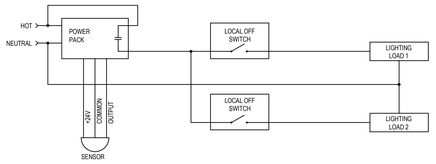

DIAGRAM S007 SENSOR CONTROLLING DUAL LEVEL LIGHTING
NTS

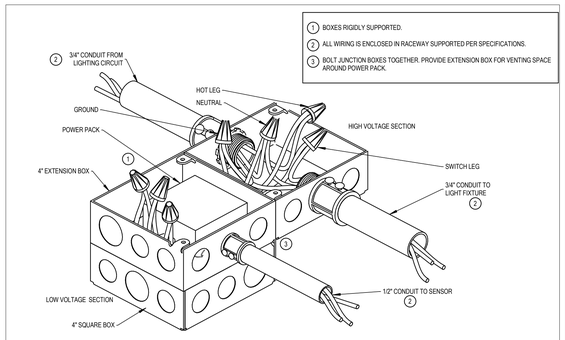

DIAGRAM S016 OCCUPANCY SENSOR POWER PACK
NTS

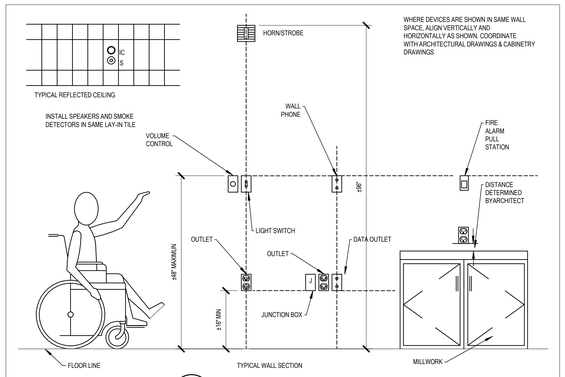

DIAGRAM R001 DEVICE MOUNTING HEIGHTS
NTS

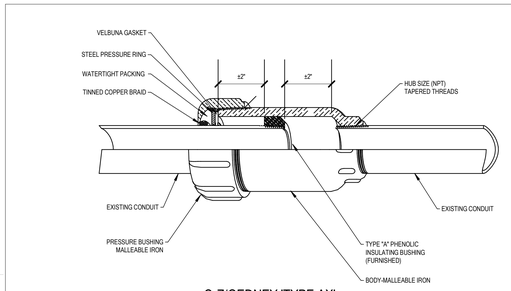

NOTE:
INSTALL CONDUIT TO ALLOW FOR 2" MOVEMENT IN EITHER DIRECTION FOR A TOTAL MOVEMENT OF 4".

O-Z/GEDNEY 'TYPE AX' FOR RIGID METAL CONDUIT

DIAGRAM H011 IN SLAB EXPANSION FITTING
NTS

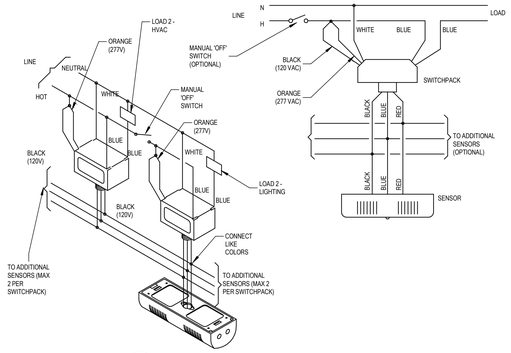

DIAGRAM R007 OCCUPANCY SENSOR WIRING DIAGRAM
NTS

TYPICAL INSTALLATION FOR ELECTRICAL SYSTEMS

NOTES:

1. FREE AIR CABLE SHALL BE CLASSIFIED PLENUM RATED 2 UNSHIELDED CABLE NEC TYPE CMP AND CEC TYPE CMP FT6.SPECIAL COLOR CODE SPECIFIC TO LOW VOLTAGE BALLAST/DRIVER 0-10V WIRING PROTOCOL. PRODUCT SHALL BE MANUFACTURED TO BE IN COMPLIANT WITH THE REQUIREMENTS OF UL444 FOR INSTALLATIONS AND APPLICATIONS IN ACCORDANCE WITH NEC ARTICLES 725 AND 800.

2. FREE AIR CABLE SHALL BE INSTALLED IN A CLEAN AND CRAFTMANSHIP-LIKE MANNER. SUPPORT AT 5'-0" INTERVALS ALONG THE PATH OF THE ACCOMPANYING BRANCH CIRCUIT LIGHTING RACEWAY. PULLING WIRE DIAGONALLY ACROSS ROOMS IS NOT ALLOWED. USING CEILING SYSTEM OR LIGHT FIXTURE SUPPORT/SEISMIC WIRES FOR SUPPORT IS NOT ALLOWED

3. UTILIZE 18 AWG GAUGE WIRE FOR DISTANCES UP TO 300' AND 16 AWG FOR DISTANCES UP TO 400'.

4. SUPPORT RACEWAYS RIGIDLY ATTACHED TO THE STRUCTURE AT INTERVALS NOT TO EXCEED 8' ON CENTER. PROVIDE A MINIMUM OF 2 SUPPORTS PER 10' OF RACEWAY. SUPPORT RACEWAY WITHIN 12" OF JUNCTION BOX, COUPLING, OUTLET, OR FITTING. PROVIDE RACEWAY SUPPORTS AT EACH 90 DEGREE BEND. REFER TO SPECIFICATION FOR MARE DETAILS.

5. LOCATE LIGHTING JUNCTION BOX WITHIN 3' OF LAY IN FIXTURE.

6. MAKE SPLICES OF 0-10V CABLES INSIDE OF JUNCTION BOXES

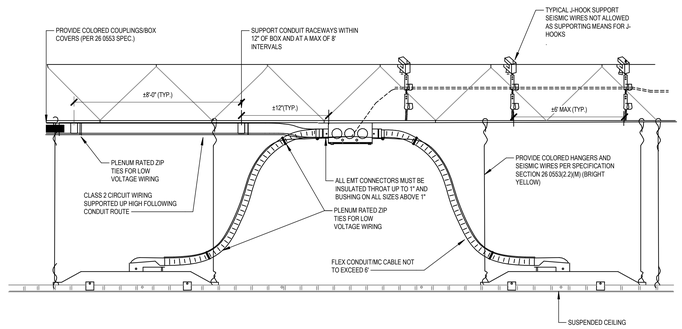

DIAGRAM A029 A029 - TYPICAL ABOVE CEILING ROUGH-IN
NTS

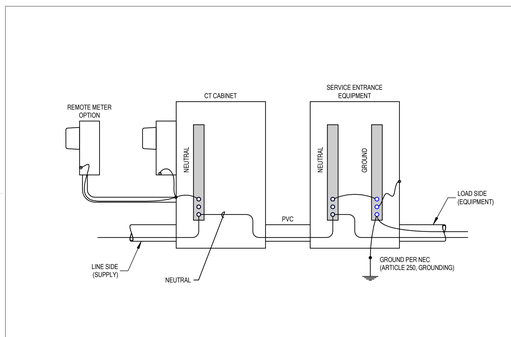

DIAGRAM Q007 SERVICE ENCLOSURE BONDING
NTS

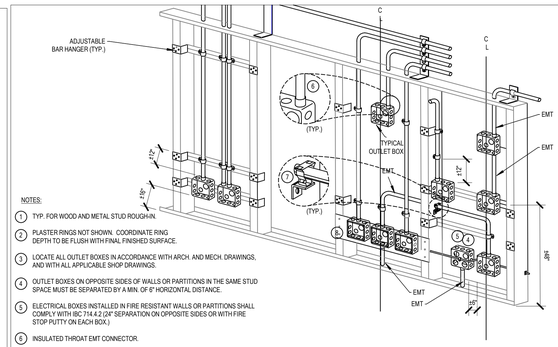

NOTES:
1. TYP. FOR WOOD AND METAL STUD ROUGH-IN.
2. PLASTER RINGS NOT SHOWN. COORDINATE RING DEPTH TO BE FLUSH WITH FINAL FINISHED SURFACE.
3. LOCATE ALL OUTLET BOXES IN ACCORDANCE WITH ARCH. AND MECH. DRAWINGS, AND WITH ALL APPLICABLE SHOP DRAWINGS.
4. OUTLET BOXES ON OPPOSITE SIDES OF WALLS OR PARTITIONS IN THE SAME STUD SPACE MUST BE SEPARATED BY A MIN. OF 6" HORIZONTAL DISTANCE.
5. ELECTRICAL BOXES INSTALLED IN FIRE RESISTANT WALLS OR PARTITIONS SHALL COMPLY WITH IBC 714.4.2 (24" SEPARATION ON OPPOSITE SIDES OR WITH FIRE STOP PUTTY ON EACH BOX.)
6. INSULATED THROAT EMT CONNECTOR.
7. CADDY FASTENER, THROUGH STUD CABLE/CONDUIT SUPPORT .
8. CADDY BOX MOUNTING BRACKET .

DIAGRAM H004 TYPICAL ROUGH IN REQUIREMENTS
NTS

NOTE:
1. PROVIDE ADDRESSABLE INITIATION LOOP(S) AND POWER CIRCUIT FOR THE CARBON MONOXIDE DETECTORS.
2. PROVIDE CARBON MONOXIDE DETECTOR WITH ASSOCIATED MONITOR MODULE. SEE PLANS FOR QUANTITY AND LOCATION.
3. PROVIDE CONTROL MODULE WITH FAN SHUTDOWN RELAY TO SHUTDOWN MECHANICAL UNIT ON LOCAL CARBON MONOXIDE DETECTOR ACTIVATION.
4. PROVIDE FIRE ALARM BLUE STROBE(S). SEE PLANS FOR QUANTITY AND LOCATIONS.
5. PROVIDE DUCT SMOKE DETECTORS AND FAN RELAYS AT ALL FAN UNITS 2000 CFM AND OVER. SHUT DOWN ALL SUPPLY AND RETURN FANS UPON A GENERAL ALARM SIGNAL.
6. PROVIDE KEY OVERRIDE SWITCH FOR EVERY PAIR OF ELECTROMAGNETIC DOOR HOLDERS/RELEASES.
7. PROVIDE KEY OVERRIDE SWITCH IN MAIN ADMINISTRATION OFFICE THAT WILL RELEASE ALL ELECTROMAGNETIC DOOR HOLDER/RELEASES THROUGHOUT THE BUILDING.
8. COORDINATE WITH THE ACCESS CONTROL PROVIDER TO PROVIDE INPUT POINT THAT WILL ALLOW THE ACCESS CONTROL SYSTEM TO RELEASE ALL ELECTROMAGNETIC DOOR HOLDER/RELEASES THROUGHOUT THE BUILDING DURING A LOCK DOWN EVENT OR PER THE OWNERS REQUIREMENTS.
9. COORDINATE WITH THE INTERCOM PROVIDER TO PROVIDE INPUT POINT THAT WILL ALLOW THE INTERCOM SYSTEM TO RELEASE ALL ELECTROMAGNETIC DOOR HOLDER/RELEASES THROUGHOUT THE BUILDING DURING A LOCK DOWN EVENT OR PER THE OWNERS REQUIREMENTS.

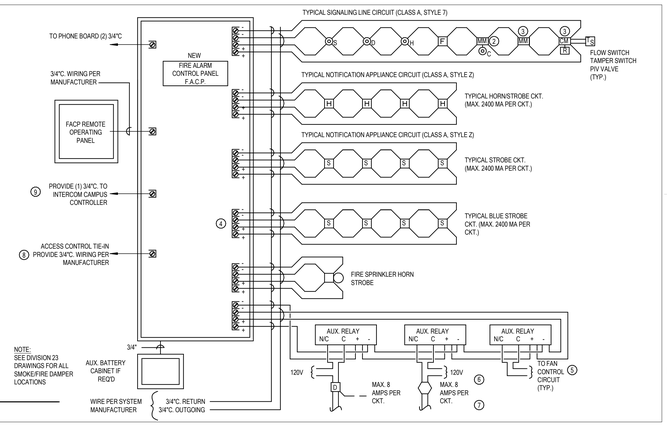

NOTE:
SEE DIVISION 23 DRAWINGS FOR ALL SMOKE/FIRE DAMPER LOCATIONS

DIAGRAM D016 TYPICAL FIRE ALARM RISER
NTS

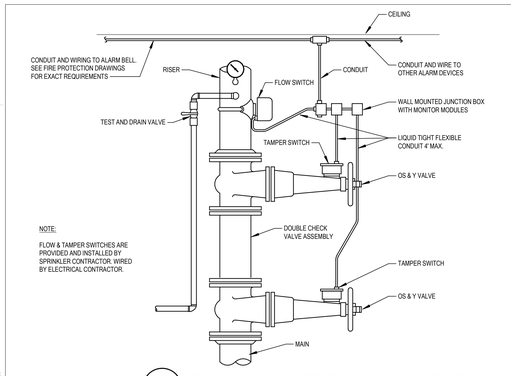

NOTE:
FLOW & TAMPER SWITCHES ARE PROVIDED AND INSTALLED BY SPRINKLER CONTRACTOR. WIRED BY ELECTRICAL CONTRACTOR.

DIAGRAM D001 FIRE SPRINKLER RISER CONNECTION
NTS

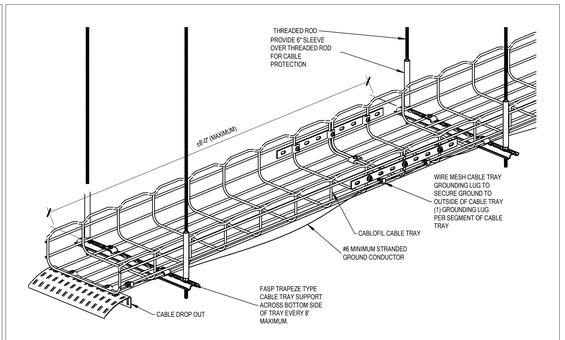

DIAGRAM I012 WIRE MESH CABLE TRAY TRAPEZE HANGING
NTS

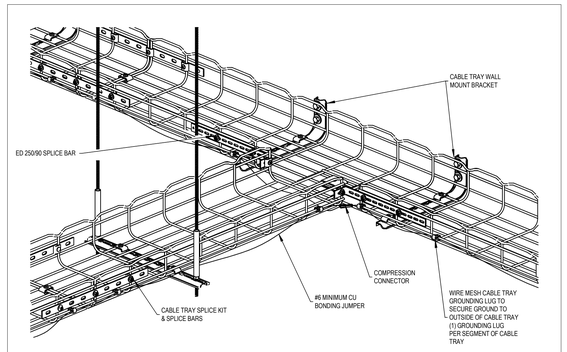

DIAGRAM I013 WIRE CABLE TRAY-WALL MOUNTING
NTS

NOTES:
ALL CABLE TRAY SHALL BE INSTALLED WITH A CONTINUOUS COPPER GROUND SIZED AND SECURED TO THE OUTSIDE OF THE CABLE TRAY IN ACCORDANCE WITH THE DETAIL SHOWN BELOW.

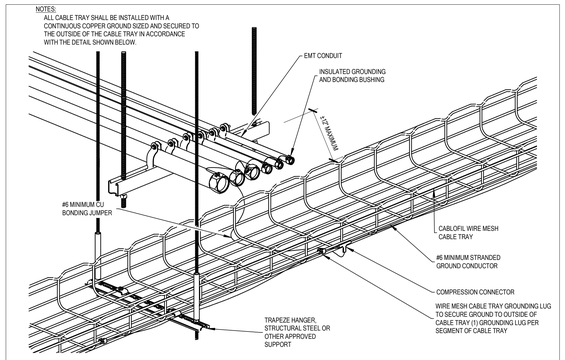

DIAGRAM I011 WIRE CABLE TRAY GROUNDING
NTS

MHTN ARCHITECTS
MHTN Architects, Inc.
280 South 400 West
Suite 250
Salt Lake City, Utah 84101
Telephone (801) 595-6700
www.mhtn.com

BNA CONSULTING
4225 Lake Park Blvd, Suite 275
West Valley City, UT 84120
P: 801.532.2196
F: 801.532.2305
www.bnaconsulting.com
SALT LAKE ST GEORGE

JORDAN SCHOOL DISTRICT

JORDAN LEARNING CENTER
3706 WEST 9800 SOUTH
SOUTH JORDAN, UT 84009

©2023 MHTN ARCHITECTS, INC.
Confidentiality Notice:
This document is intended for use on the Project identified herein by individuals and companies involved in the design, permitting, bidding and construction of the Project. MHTN Architects, Inc. grants limited rights to distribute and reproduce this document for such purposes only. Any other use, copying or reproduction of this document for purposes other than those indicated is strictly prohibited. If a digital copy of this document is received in error, please delete it.

SEAL

MHTN PROJECT NO. 2024528

Original drawing is 30 x 42. Do not scale contents of this drawing.

REVISIONS
CONTRACTOR TO VERIFY DRAWINGS IN FIELD USE REFLECT LAST REVISION DATE.

NO.△	DATE	DESCRIPTION

ISSUE
CONSTRUCTION DOCUMENTS
AUGUST 29, 2024

SHEET NAME
ELECTRICAL DIAGRAMS

SHEET NUMBER
E503

Autodesk Docs://2024528 JSD Retail Remodel/24133 - JSD LEARNING Center ELEC v24.rvt
8/28/2024 10:16:17 AM

NOTES:

1. SEE SPECIFICATION 26 0532/26 2713 FOR INSTALLATION REQUIREMENTS.
2. INSTALL ALL FLOOR STANDING SERVICE EQUIPMENT ON 4" HIGH CONCRETE CURB AND BOLT EQUIPMENT TO CURB WITH 3/8" ANCHORS AT EACH CORNER AND AT INTERVALS NOT TO EXCEED 8' ALONG PERIMETER. INSTALL CONCRETE WIRING TRENCH UNDER FLOOR STANDING EQUIPMENT; 12" DEEP MIN., AND 4" SMALLER IN LENGTH AND WIDTH THAN EQUIPMENT BASE. INSTALL GROUNDING BUSHINGS ON CONDUITS PENETRATING TRENCH. INSTALL DIAMOND PLATED/GRATE COVERS IN ANY AREA WITH EXPOSED TRENCHES.

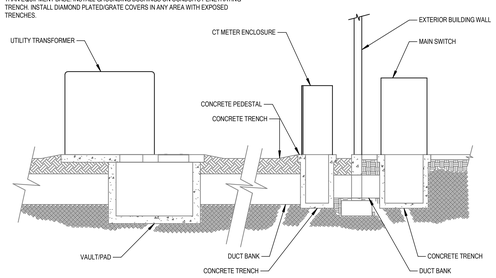

DIAGRAM U008 SERVICE ENTRANCE
NTS

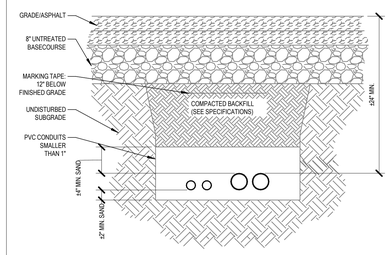

NOTES:

1. SEE SPECIFICATION FOR ALL INSTALLATION REQUIREMENTS.
2. INSTALL DETECTABLE MARKING TAPE FOR ALL UNDERGROUND WIRING. SEE SPECIFICATION FOR MORE INFORMATION.
3. APPLY PROTECTIVE COATING TO METALLIC RACEWAYS IN DIRECT CONTACT WITH EARTH OR FILL OF ANY TYPE, CONSISTING OF SPIRALLY WRAPPED PVC TAPE (1/2" MINIMUM OVERLAP OF SCOTCH WRAP TAPE OR EQUAL) OR FACTORY APPLIED VINYL CLADDING (MINIMUM THICKNESS .020 INCHES). COMPLETELY WRAP AND TAPE ALL FIELD JOINTS.
4. BURIAL DEPTHS MUST COMPLY WITH NEC SECTION 300-5 BUT IN NO CASE BE LESS THAN 24". UNLESS NOTED OTHERWISE ON DRAWINGS.
5. LOCATE AND PROTECT ALL CROSSINGS OF EXISTING UTILITIES AND OTHER UNDERGROUND WORK.
6. PROVIDE 6 INCHES TOP SOIL IN PLANTED AREAS INSTEAD OF BASECOARSE AND ASPHALT.
7. SEE SPECIFICATIONS FOR SUBSIDENCE WARRANTY.
8. SEE SPECIFICATIONS FOR STORAGE AND REMOVAL OF EXCAVATED MATERIAL.

DIAGRAM U009 CONDUIT BELOW GRADE
NTS

TYPE CSMI AND CSMC

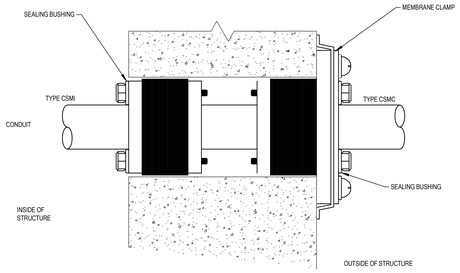

DIAGRAM H002 CONDUIT PENETRATION
NTS

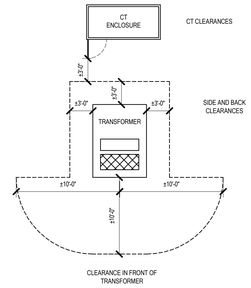

DIAGRAM Q014 TRANFORMER/CT ENCLOSURE LAYOUT (RMP)
NTS

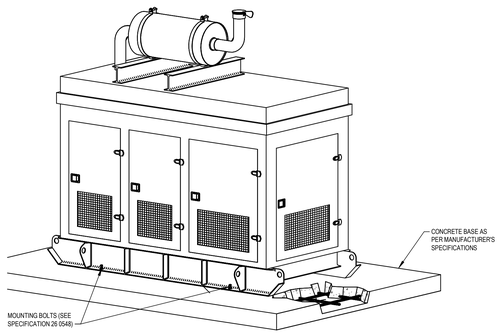

DIAGRAM N003 GENERATOR WITH COVER
NTS

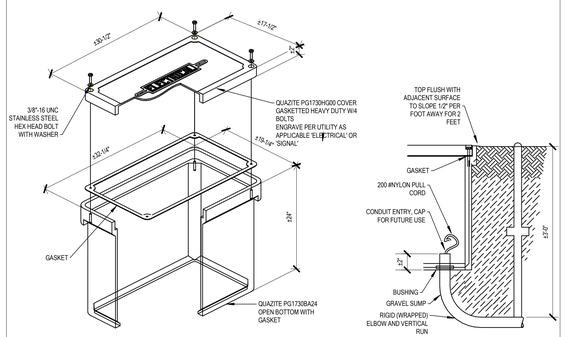

DIAGRAM L011 UNDERGROUD HANDHOLE (17"X30")
NTS

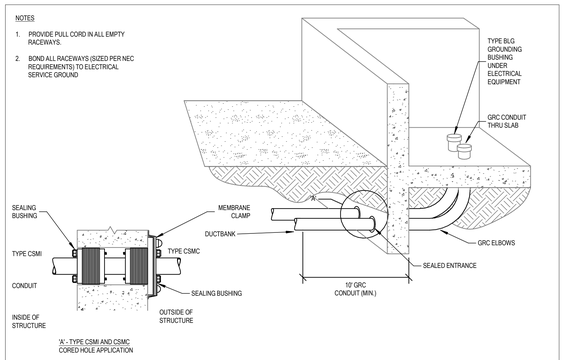

DIAGRAM F003 BUILDING ENTRANCE CONDUITS (THROUGH CORE DRILLED WALL BELOW GRADE)
NTS

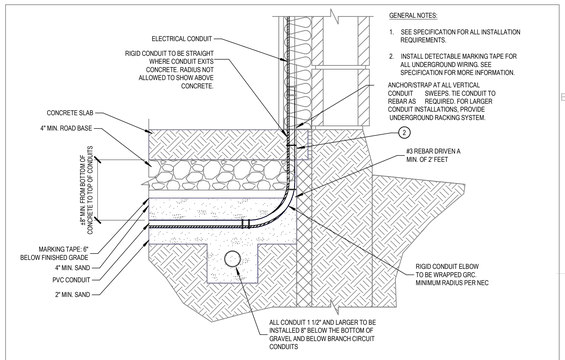

DIAGRAM F016 TYPICAL CONDUIT INSTALLATION
NTS

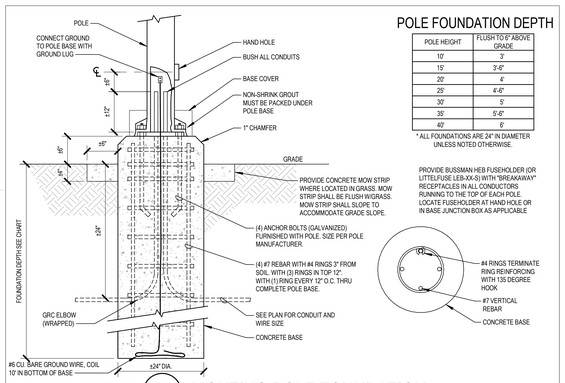

POLE FOUNDATION DEPTH

POLE HEIGHT	FLUSH TO 6" ABOVE GRADE
10'	3'
15'	3'-6"
20'	4'
25'	4'-6"
30'	5'
35'	5'-6"
40'	6'

* ALL FOUNDATIONS ARE 24" IN DIAMETER UNLESS NOTED OTHERWISE.

PROVIDE BUSSMAN HEB FUSEHOLDER (OR LITTELFUSE LEB-XX-S) WITH "BREAKAWAY" RECEPTACLES IN ALL CONDUCTORS RUNNING TO THE TOP OF EACH POLE. LOCATE FUSEHOLDER AT HAND HOLE OR IN BASE JUNCTION BOX AS APPLICABLE

DIAGRAM C002 LIGHTING POLE FOUNDATION
NTS

NOTES

1. PROVIDE PULL CORD IN ALL EMPTY RACEWAYS.
2. BOND ALL RACEWAYS (SIZED PER NEC REQUIREMENTS) TO ELECTRICAL SERVICE GROUND

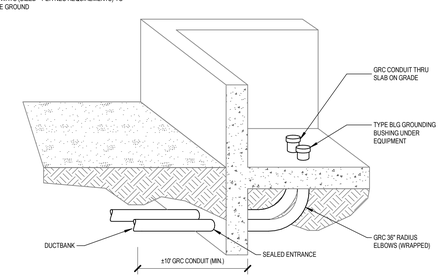

DIAGRAM F002 BUILDING ENTRANCE CONDUITS
NTS

NOTES:

1. SEE SPECIFICATION FOR ALL INSTALLATION REQUIREMENTS.
2. INSTALL DETECTABLE MARKING TAPE FOR ALL UNDERGROUND WIRING. SEE SPECIFICATION FOR MORE INFORMATION.

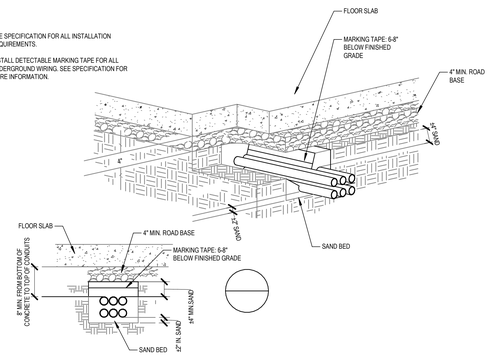

DIAGRAM U007 CONDUIT BELOW SLAB
NTS

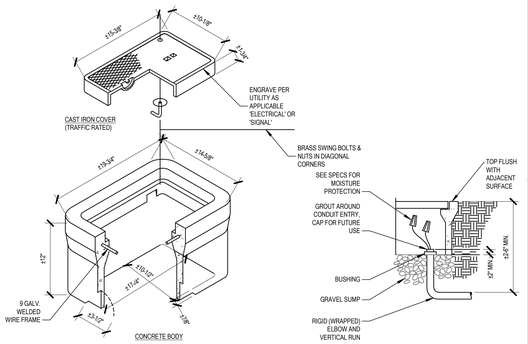

DIAGRAM L003 CONCRETE J-BOX
NTS

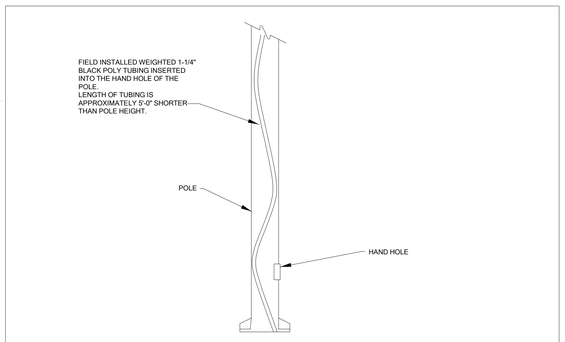

DIAGRAM C020 VIBRA-DAMP" TYPE VIBRATION DAMPENER
NTS

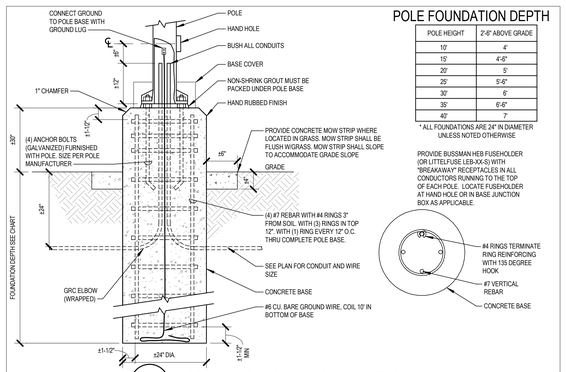

POLE FOUNDATION DEPTH

POLE HEIGHT	2'-6" ABOVE GRADE
10'	4'
15'	4'-6"
20'	5'
25'	5'-6"
30'	6'
35'	6'-6"
40'	7'

* ALL FOUNDATIONS ARE 24" IN DIAMETER UNLESS NOTED OTHERWISE

PROVIDE BUSSMAN HEB FUSEHOLDER (OR LITTELFUSE LEB-XX-S) WITH "BREAKAWAY" RECEPTACLES IN ALL CONDUCTORS RUNNING TO THE TOP OF EACH POLE. LOCATE FUSEHOLDER AT HAND HOLE OR IN BASE JUNCTION BOX AS APPLICABLE.

DIAGRAM C003 LIGHTING POLE FOUNDATION
NTS

MHTN ARCHITECTS
MHTN Architects, Inc.
280 South 400 West
Suite 250
Salt Lake City, Utah 84101
Telephone (801) 595-6700
www.mhtn.com

BNA CONSULTING
4225 Lake Park Blvd, Suite 275
West Valley City, UT 84120
P: 801.532.2196
F: 801.532.2305
www.bnaconsulting.com
SALT LAKE ST GEORGE

JORDAN SCHOOL DISTRICT

JORDAN LEARNING CENTER
3706 WEST 9800 SOUTH
SOUTH JORDAN, UT 84009

©2023 MHTN ARCHITECTS, INC.
Confidentiality Notice:
This document is intended for use on the Project identified herein by individuals and companies involved in the design, permitting, bidding and construction of the Project. MHTN Architects, Inc. grants limited rights to distribute and reproduce this document for purposes of the Project only. Distribution and/or reproduction of this document for purposes other than those indicated is strictly prohibited. If a digital copy of this document is received in error, please delete it.

SEAL

MHTN PROJECT NO. 2024528

Original drawing is 30 x 42. Do not scale contents of this drawing.

REVISIONS
CONTRACTOR TO VERIFY DRAWINGS IN FIELD USE REFLECT LAST REVISION DATE.

NO.	DATE	DESCRIPTION

ISSUE
CONSTRUCTION DOCUMENTS
AUGUST 29, 2024

SHEET NAME
ELECTRICAL DIAGRAMS

SHEET NUMBER
E504

Autodesk Docs://2024528 JSD Retail Remodel/24133 - JSD LEARNING Center ELEC v24.rvt
8/28/2024 10:16:19 AM

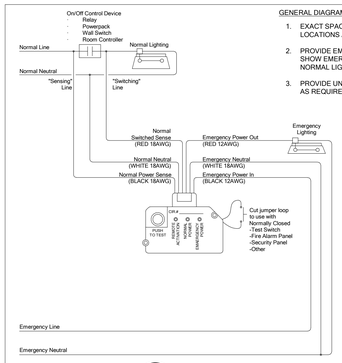

DIAGRAM S040 EMERGENCY POWER CONTROL DEVICE
NTS

GENERAL DIAGRAM NOTES:

1. EXACT SPACE LAYOUTS VARY. SEE PLANS FOR APPROXIMATE EQUIPMENT LOCATIONS AND QUANTITY.
2. PROVIDE EMERGENCY LIGHTING CONTROL UNIT IN ROOMS/AREAS THAT SHOW EMERGENCY LIGHTING BEING CONTROLLED IN CONJUNCTION WITH NORMAL LIGHTING.
3. PROVIDE UNSWITCHED NORMAL CIRCUIT HOT LEG TO EMERGENCY DEVICE AS REQUIRED.

GENERAL DIAGRAM NOTES:

1. THE LIGHTING CONTROLS AS SHOWN ARE BASED UPON EATON LIGHTING CONTROLS. PRIOR APPROVAL IS REQUIRED BEFORE BIDDING THIS PROJECT. ANY SYSTEM DIFFERENT FROM EATON THAT REQUIRES ADDITIONAL RELAYS NOT SHOWN ON PLANS DUE TO LACK OF SEPARATION OF RELAYS AND DIMMING ZONES MUST BE ACCOUNTED FOR AND PROVIDED IN THE BID AND MUST FUNCTION AS SIMILAR TO THAT WHICH IS REQUIRED IN FINAL INSTALLATION.
2. EXACT SPACE LAYOUTS VARY. SEE PLANS FOR APPROXIMATE EQUIPMENT LOCATIONS AND QUANTITY.
3. ALL ROOM CONTROLLERS SHALL ALLOW FOR TYPICAL 0-10V DIMMING, DAYLIGHT HARVESTING AND OCCUPANCY SENSING. INDEPENDENT DIMMING AND OVERRIDE OF EACH ZONE IS REQUIRED.
4. EACH ROOM CONTROLLER SHALL BE ABLE TO BE INDEPENDENTLY PROGRAMMED ON-SITE.
5. PROVIDE EMERGENCY LIGHTING CONTROL UNIT IN ROOMS/AREAS THAT SHOW EMERGENCY LIGHTING BEING CONTROLLED IN CONJUNCTION WITH NORMAL LIGHTING.
6. ALL CEILING-MOUNTED OCCUPANCY SENSORS SHALL BE PROVIDED WITH AN AUXILIARY CONTACT FOR HVAC CONTROL.
7. PROVIDE A UL 924 RELAY AS SPECIFIED FOR AUTOMATIC EMERGENCY LIGHTING CONTROL. THE UL 924 RELAY AUTOMATICALLY TRACKS WITH RELAY 1 AND CAN BE CONNECTED TO ANY OF THE THREE 0-10V DIMMERS. THE UL 924 RELAY AUTOMATICALLY CLOSES AND DISCONNECTS THE 0-10V CONTROL OPEN LOSS OF NORMAL POWER PROVIDING ADEQUATE EGRESS LIGHTING CONTROL. LADDERLESS MAINTENANCE TESTING OF THE UL 924 RELAY CAN BE ACHIEVED BY PRESSING THE ALL OFF BUTTON FOUR TIMES.
8. ALL LOW VOLTAGE WIRE/CABLE FOR LIGHTING SENSORS, INTERCOM, AUDIO/VISUAL EQUIPMENT, CLASSROOM SOUND AMPLIFICATION, ETC. TO BE PROPERLY SUPPORTED PER THE TELE/DATA SPEC, NEC 800.12/300.11. AND AT 5'-0" INTERVALS AND TO FOLLOW BUILDING STRUCTURAL LINES. PULLING WIRE DIAGONALLY ACROSS ROOMS IS NOT ALLOWED. USING CEILING SYSTEM OR LIGHT FIXTURE SUPPORT/SEISMIC WIRES FOR SUPPORTS NOT ALLOWED.

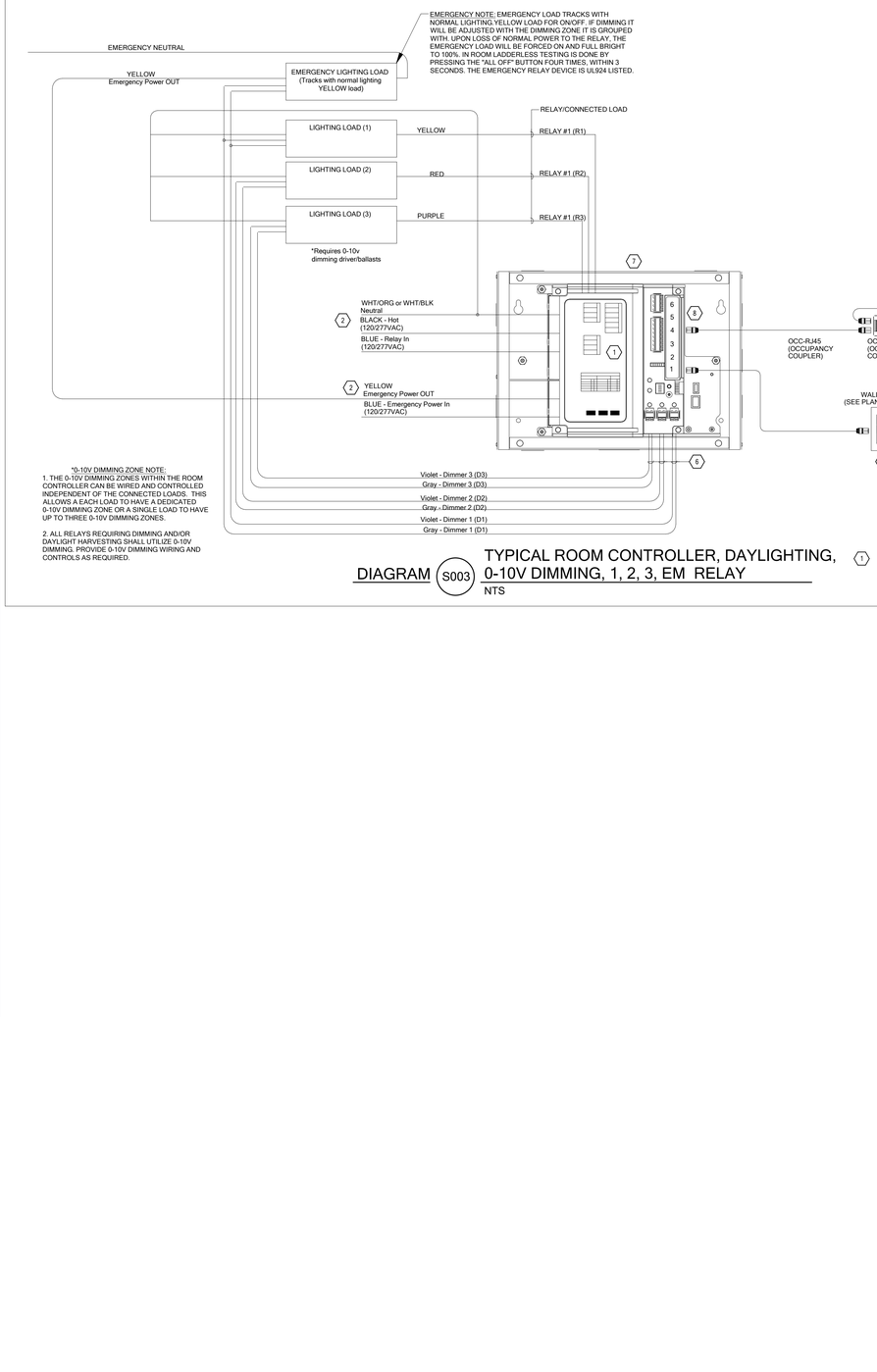

*0-10V DIMMING ZONE NOTE:
1. THE 0-10V DIMMING ZONES WITHIN THE ROOM CONTROLLER CAN BE WIRED AND CONTROLLED INDEPENDENT OF THE CONNECTED LOADS. THIS ALLOWS A EACH LOAD TO HAVE A DEDICATED 0-10V DIMMING ZONE OR A SINGLE LOAD TO HAVE UP TO THREE 0-10V DIMMING ZONES.

2. ALL RELAYS REQUIRING DIMMING AND/OR DAYLIGHT HARVESTING SHALL UTILIZE 0-10V DIMMING. PROVIDE 0-10V DIMMING WIRING AND CONTROLS AS REQUIRED.

DIAGRAM S003 TYPICAL ROOM CONTROLLER, DAYLIGHTING, 0-10V DIMMING, 1, 2, 3, EM RELAY (1)
NTS

KEYED NOTES:

1. EXACT ROOM CONTROLLER MODEL WILL VARY. PROVIDE THE CORRECT ROOM CONTROLLER MODEL BASED UPON WHAT IS SHOWN ON PLANS AND WHAT IS REQUIRED FOR PROPER LIGHTING CONTROL SEQUENCING.
2. SEE LIGHTING PLANS FOR BRANCH CIRCUIT REQUIREMENTS.
3. PROVIDE DAYLIGHT ZONE CONTROL REQUIREMENTS PER IECC-2021 C405 LOCATE DAYLIGHT SENSOR(S) PER MANUFACTURER'S RECOMMENDATION AND WHERE REQUIRED WITHIN THE ROOM FOR PROPER COVERAGE. PROVIDE ADDITIONAL DIMMING ZONES/RELAYS AND WIRING TO CONTROL THE DAYLIGHTING ZONE SEPARATE FROM THE FIXTURES OUTSIDE THE DAYLIGHT ZONE.
4. PROVIDE DUAL TECH. OCCUPANCY SENSOR(S) AS SHOWN. LOCATE OCCUPANCY SENSOR(S) PER MANUFACTURER FOR PROPER PLACEMENT AND ADJUSTMENT OF OCCUPANCY SENSORS. PROVIDE ADDITIONAL SENSORS IF REQUIRED TO PROPERLY COVER THE RESPECTIVE ROOM.
5. PROVIDE LOW VOLTAGE WALLSTATION AS SEE DIAGRAM FOR WALLSTATION LAYOUT AND CONFIGURATION.
6. IF INDICATED, SEE DRAWINGS FOR DIMMING ZONES REQUIRED e.g. 'D1', 'D2', 'D3'.
7. MOUNT ROOM CONTROLLER(S) ABOVE ENTRY DOOR ALONG WITH ANY OTHER RELATED DEVICES. PROVIDE INDICATOR LABELING ON CEILING TILE NEAREST THE ROOM CONTROLLER. COORDINATE WITH ARCHITECT FOR STYLE AND METHOD OF LABELING.
8. INTERIOR CLASSROOMS AND WHERE LOCATED ON ARCHITECTURAL PLANS, PROVIDE CONNECTION BETWEEN ADJUSTABLE SKYLIGHTS AND ROOM CONTROLLERS ONBOARD CONNECTION FOR OPERATION OF ADJUSTABLE SKYLIGHT MOTORS. THE ADJUSTABLE SKYLIGHT WILL AUTOMATICALLY OPEN AND CLOSE BASED ON SIGNALS RECEIVED FROM THE ROOM CONTROLLER. SKYLIGHTS SHALL BE INTERFACED WITH DIMMING LOUVER SHALL AUTOMATICALLY BE CONTROLLED BASED ON THE LIGHTING WALLSTATIONS AND LIGHT SENSORS USED IN THE ROOM.
9. PROVIDE OCCUPANCY SENSOR WITH AN ADDITIONAL SET OF DRY CONTACTS FOR HVAC CONTROL AT EACH VAV BOX LOCATION. COORDINATE WITH MECHANICAL DRAWINGS AND THE MECHANICAL CONTRACTOR FOR EXACT LOCATIONS.

KEYNOTES

1. CT WIRE
2. 120VAC
3. REFERENCE AND POWER CIRCUIT: (1) 3-PHASE, 4-WIRE, PLUS GROUND CIRCUIT AT THE METERED VOLTAGE, FEED FROM DEDICATED 15A 3-POLE BREAKER.
3. LINE: 15AMP, 120VAC, 2 WIRE PLUS GROUND, 60HZ DIRECT FROM SERVICE PANEL.
4. (1) MODBUS RTU CABLE: BELDEN 9841 LABELED.
5. ETHERNET CABLE: BELDEN 2412 TERMINATED PER EIA/TIA 568B LABELED.
6. PERSON AND LABELING FOR REFERENCE ONLY

DIAGRAM U601 ENERGY METERING TOPOLOGY
NTS

MHTN ARCHITECTS
MHTN Architects, Inc.
280 South 400 West
Suite 250
Salt Lake City, Utah 84101
Telephone (801) 595-6700
www.mhtn.com

BNA CONSULTING
4225 Lake Park Blvd, Suite 275
West Valley City, UT 84120
P: 801.532.2196
F: 801.532.2305
www.bnaconsulting.com
SALT LAKE ST GEORGE

JORDAN SCHOOL DISTRICT

JORDAN LEARNING CENTER

3706 WEST 9800 SOUTH
SOUTH JORDAN, UT 84009

©2023 MHTN ARCHITECTS, INC.
Confidentiality Notice
This document is intended for use on the Project identified herein by individuals and companies involved in the design, permitting, bidding and construction of the Project. MHTN Architects, Inc. grants limited rights to distribute and reproduce this document for such purposes. Any other distribution, publishing or reproduction of this document for purposes other than those indicated is strictly prohibited. If a digital copy of this document is received in error, please delete it.

SEAL

MHTN PROJECT NO 2024528

Original drawing is 30 x 42. Do not scale contents of this drawing.

REVISIONS
CONTRACTOR TO VERIFY DRAWINGS IN FIELD USE REFLECT LAST REVISION DATE.

NO.△	DATE	DESCRIPTION

ISSUE
CONSTRUCTION DOCUMENTS
AUGUST 29, 2024

SHEET NAME
ELECTRICAL DIAGRAMS

SHEET NUMBER
E505

Autodesk Docs://2024528 JSD Retail Remodel/24133 - JSD LEARNING Center ELEC V24.rvt
8/28/2024 10:10:21 AM

ABBREVIATIONS INDEX

ABBREV.	DESCRIPTION	ABBREV.	DESCRIPTION
#	NUMBER	MEP	MECHANICAL, ELECTRICAL AND PLUMBING
AFF	ABOVE FINISH FLOOR	MFG	MANUFACTURER
ARCH	ARCHITECTURE	MAX	MAXIMUM
AUX	AUXILIARY	MIC	MICROPHONE
AWG	AMERICAN WIRE GAUGE	MIN	MINIMUM
BC	BARE COPPER	MTG	MOUNTING
C	CONDUIT	N/A	NOT APPLICABLE
CATV	CABLE TELEVISION	NIC	NOT IN CONTRACT
CLG	CEILING	NTS	NOT TO SCALE
CNTR	CONTRACTOR	PLEN	PLENUM
CU	COPPER	(R)	RELOCATE
C/W	COMPLETE WITH	RECPT	RECEPTACLE
DWG	DRAWING	SPEC	SPECIFICATIONS
(E)	EXISTING	SPKR	SPEAKER
FT	FOOT	TV	TELEVISION
GND	GROUND	TYP	TYPICAL
IG	ISOLATED GROUND	UG	UNDERGROUND
IN	INCH	UPS	UNINTERRUPTED POWER SUPPLY
J-BOX	JUNCTION BOX	W	WATTS
LTG	LIGHTING	W/O	WITHOUT

CABLING GROUPS AND CONDUIT SEPARATION SCHEDULE

AUDIO AND VIDEO WIRING TYPES:

AUDIO AND VIDEO SYSTEM WIRING IS DIVIDED INTO WIRING GROUPS ACCORDING TO THEIR NOMINAL LEVELS:

GROUP	WIRING TYPE
GROUP 1	FIBER OPTIC CABLE
GROUP 2	O mV TO 100 mV SIGNALS, EXAMPLE: MICROPHONE LEVEL SIGNAL
GROUP 3	100 mV TO 10 V SIGNALS, EXAMPLE: LINE-LEVEL SIGNAL
GROUP 4	10 V TO 70 V SIGNALS, EXAMPLE: SPEAKER LEVEL SIGNAL
GROUP 5	CONTROL, DIGITAL CIRCUITS, DATA AND VIDEO

NOTE: GROUPS LISTED ABOVE SHALL NEVER BE COMBINED WITHIN THE SAME CONDUIT

AUDIO AND VIDEO CONDUIT SEPARATION

MINIMUM CONDUIT SEPARATION BETWEEN CONDUITS CARRYING WIRING OF DIFFERENT AUDIO AND VIDEO GROUPS IS AS FOLLOWS:

GROUP	GROUP 1	GROUP 2	GROUP 3	GROUP 4	GROUP 5
GROUP 1	ADJACENT	ADJACENT	ADJACENT	ADJACENT	ADJACENT
GROUP 2	ADJACENT	ADJACENT	6"	12"	12"
GROUP 3	ADJACENT	6"	ADJACENT	12"	6"
GROUP 4	ADJACENT	12"	12"	ADJACENT	6"
GROUP 5	ADJACENT	12"	6"	6"	ADJACENT

NOTE: NINETY DEGREE CROSSING IN CLOSE PROXIMITY IS PERMITTED.

ELECTRICAL CONDUIT SEPARATION

MINIMUM CONDUIT SEPARATION BETWEEN CONDUITS CARRYING AUDIO AND VIDEO WIRING AND OTHER ELECTRICAL SERVICE CONDUIT IS AS FOLLOWS:

	GROUP 1	GROUP 2	GROUP 3	GROUP 4	GROUP 5
277/480V AC CIRCUIT	ADJACENT	24"	24"	24"	24"
120/208V AC CIRCUIT	ADJACENT	24"	12"	12"	24"

NOTE: CONDUITS SHALL NOT RUN MORE THAN 20 FEET IN PARALLEL WITHIN THE GIVEN DISTANCES ABOVE.

AUDIOVISUAL CABLE AND CONDUIT SCHEDULE

NOTES:

1. APPROVED EQUALS FROM OTHER MANUFACTURERS ARE BELDEN, GEPCO/GENERAL, ICE, KRAMER, EXTRON, CRESTRON, LIBERTY CABLE, AND WINDY CITY WIRE.
2. PROVIDE PLENUM RATED CABLES IN ANY "AIR HANDLING" SPACES E.G. ABOVE CEILINGS, RAISED FLOORS, CHASES, ETC.
3. CABLE QUANTITY INDICATED ON DRAWINGS SHOWS ON FINAL RUN. IF NOT NOTED PROVIDE CABLING FOR SINGLE DEVICE.
4. CONDUIT REQUIREMENTS SHOWN ARE MINIMUM CONDUIT SIZE REQUIRED FOR A SINGLE CABLE, UNLESS OTHERWISE NOTED ON DRAWINGS. NUMBER OF CABLES LISTED IS THE MAXIMUM AMOUNT ALLOWED FOR CONDUIT SIZE INDICATED.
5. WHEN COMBINING CABLE TYPES OF THE SAME GROUP, THE TYPE WITH THE LARGEST CONDUIT REQUIREMENT DICTATES CONDUIT SIZE.
6. PROVIDE ON ALL HDMI CABLES LONGER THAN 35' OR WITH MORE THAN (3) CONNECTION POINTS (1) ACTIVE HDMI EXTENSION DEVICE.
7. ALL CATEGORY CABLE SHALL BE TESTED AND CERTIFIED TO ANSI/TIA/EIA-568C AND IEEE 802.3an STANDARDS USING A LEVEL IIIe TESTER.
8. REFER TO SPECIFICATIONS FOR STP CABLE REQUIREMENTS. ALL UNSHIELDED (UTP) CATEGORY CABLES WITHIN THE PROJECT SHALL BE SUPPLIED FROM A SINGLE MANUFACTURER AND MATCH MAKE/MODEL.
9. HDMI CABLES ARE INTENDED TO PASS 4K 60 4:4:4 FROM SOURCE TO DESTINATION. CONTRACTOR TO VERIFY THE LENGTH OF ALL CABLES USED MEET THIS REQUIREMENT.

* INDICATES DEFAULT CABLE IF MANUFACTURER DOES NOT RECOMMEND A SPECIFIC CABLE.
** INDICATES DEFAULT CABLE IF HORIZONTAL CABLING IS EXCLUDED FROM THE PROJECT AND NOT OWNER PROVIDED.

CABLE TYPE	DESCRIPTION	CONDUIT REQUIREMENTS	MANUFACTURER	MODEL NUMBER	CABLE GROUP
(#)AT	ANTENNA, COAXIAL RG8X	1" CONDUIT = (7) CABLES 1 1/2" CONDUIT = (12) CABLES	WEST PENN	807 *	5
(#)CT	CONTROL, 2/22 SHIELDED, 2/18 UNSHIELDED	1" CONDUIT = (7) CABLES 1 1/4" CONDUIT = (12) CABLES	WEST PENN	77350 * D25350 (P) *	5
(#)HD	HDMI < 20', ULTRA FLEXIBLE	1 1/4" CONDUIT = (1) CABLES 2" CONDUIT = (3) CABLES	EXTRON CRESTRON	HDMI ULTRA/## CBL-HD-##	5
(#)HD	HDMI > 20'	1 1/4" CONDUIT = (1) CABLES 2" CONDUIT = (3) CABLES	EXTRON KRAMER	HDMI PRO P/XX CP-HM/HM/ETH (P)	5
(#)LA (#)MA	LINE LEVEL, 22 AWG MICROPHONE, 22 AWG	1" CONDUIT = (23) CABLES 1 1/2" CONDUIT = (77) CABLES	WEST PENN	291 D25454 (P)	3 2
(#)MFB	MULTIMODE FIBER OPTIC	1" CONDUIT MINIMUM	PER SPEC	27 1500	1
(#)RG6	RG-6 COAXIAL CABLE	1" CONDUIT = (8) CABLES 1 1/2" CONDUIT = (18) CABLES	WEST PENN	841 25841 (P)	5
(#)RG11	RG-11 COAXIAL CABLE	1" CONDUIT = (3) CABLES 1 1/4" CONDUIT = (6) CABLES	WEST PENN	821 D25821 (P)	5
(#)S12	SPEAKER, 12 AWG	1" CONDUIT = (3) CABLES 1 1/2" CONDUIT = (7) CABLES 2" CONDUIT = (11) CABLES	WEST PENN	227 25227B (P)	4
(#)S16	SPEAKER, 16 AWG	1" CONDUIT = (10) CABLES 1 1/4" CONDUIT = (17) CABLES	WEST PENN	225 25225B (P)	4
(#)SFB	SINGLE MODE FIBER OPTIC	1" CONDUIT MINIMUM	PER SPEC	27 1500	1
(#)STP	SHIELDED TWISTED PAIR, CAT 6A	1" CONDUIT = (4) CABLES 1 1/4" CONDUIT = (8) CABLES	PER MFG WEST PENN	4246AF * 254246AF (P) *	5
(#)UTP	UN-SHIELDED TWISTED PAIR CAT 6	1" CONDUIT = (9) CABLES 1 1/4" CONDUIT = (15) CABLES	PER SPEC WEST PENN	4246 ** 254246 (P) ** SPEC 27 1500	5
(#)VG	HIGH RESOLUTION VIDEO	1" CONDUIT = (1) CABLES 1 1/4" CONDUIT = (4) CABLES	WEST PENN	5CRGB 255CRGB (P)	5
(#)SDI	SERIAL DIGITAL INTERFACE (RG-6 COAX)	1" CONDUIT = (8) CABLES 1 1/2" CONDUIT = (18) CABLES	WEST PENN	841 25841 (P)	5
(#)USB	USB EXTENSION CABLE	1" CONDUIT = (3) CABLES 1 1/4" CONDUIT = (10) CABLES	CABLES TO GO	52108	5
(#)X#	MANUFACTURER PROPRIETARY CABLE	AS NOTED	SPEC. 27 4100	SPEC. 27 4100	NA

AUDIOVISUAL SYMBOL SCHEDULE

NOTES:

1. HEIGHT MEASURED TO BOTTOM OF THE DEVICE FROM FINISHED FLOOR.
2. HEIGHT MEASURED TO CENTER LINE OF THE DEVICE FROM THE FINISHED FLOOR.
3. REFER TO DIAGRAMS AND ELEVATIONS FOR CUSTOM ROUGH-IN REQUIREMENTS.
4. STANDARD MOUNTING HEIGHT UNLESS OTHERWISE NOTED ON PLANS.
5. ROUGH-IN TO BE HORIZONTAL.
6. ROUGH-IN TO BE INSTALLED ABOVE ACCESSIBLE CEILING.
7. ROUGH-IN TO BE INSTALLED ABOVE CEILING.
8. DEVICE IS TYPICALLY LOCATED IN MILLWORK, FURNITURE, BEHIND A MONITOR OR ABOVE A PROJECTOR.
9. ABOVE TABLE/COUNTER MOUNTED DEVICE.
10. REFER TO MANUFACTURER'S RECOMMENDED CABLE REQUIREMENTS FOR EXACT CABLE REQUIRED.
11. FOLLOW BICSI STANDARDS FOR CABLE ROUTING AND DISTANCES.
12. JUNCTION BOX INDICATED IS FOR MOST INSTALLATIONS. DEVICE WILL BE NOTED WHEN JUNCTION BOX SIZE REQUIREMENTS ARE DIFFERENT FROM INDICATED.
13. MOUNTING HEIGHT SHOWN IS FROM THE BOTTOM OF THE MONITOR TO THE FINISHED FLOOR.

GENERAL SCHEDULE NOTES:

A. TYPICAL SYMBOL SCHEDULE. SOME SYMBOLS MAY NOT BE USED IN THIS SET OF DRAWINGS.
B. DEVICES WITH "A" ADJACENT TO IT INDICATE DEVICE TO BE COORDINATED WITH MILLWORK PRIOR TO ROUGH-IN.
C. ROUGH-IN JUNCTION BOX, CONDUIT, AND MOUNTING HEIGHT ARE DEFAULT REQUIREMENTS. REFER TO PLANS FOR SPECIFIC NOTES AND REQUIREMENTS FOR A SPECIFIC INSTANCE.
D. CONDUIT STUBBED INTO ACCESSIBLE CEILING UNLESS OTHERWISE NOTED.
E. CABLE FROM DEVICE TO BE HOMERUN TO DESTINATION WITHOUT SPLICES.

SYMBOL	DESCRIPTION	J-BOX	CONDUIT	MOUNTING HEIGHT	CABLE TYPE	NOTES
M#	MICROPHONE INPUT, WALL PLATE (M1/M2 = D1, M3/M4 = D2)	D1,D2	(1) 3/4"	RECEPTACLE HEIGHT	(#) MA	2,4.
AX	AUXILIARY INPUT, 3.5MM/RCA CONNECTION, WALL PLATE	D1	(1) 3/4"	RECEPTACLE HEIGHT	(1) LA	2,4.
T TS	AUDIO OUTPUT, WALL PLATE, T = XLR MALE CONNECTION, TS = 1/4 TS CONNECTION	D1	(1) 3/4"	RECEPTACLE HEIGHT	(1) LA	2,4.
MA	MICROPHONE INPUT WITH AUXILIARY INPUT, WALL PLATE	D1	(1) 3/4"	RECEPTACLE HEIGHT	(1) MA (1) LA	2,4.
MC	MICROPHONE INPUT, CEILING	D1	(1) 3/4"	CEILING	(1) MA	2,4.
MB	TABLE TOP BOUNDARY MICROPHONE		(1) 1/2"	ON TABLE/ MILLWORK	(1) MA	2,3,9.
MW	WALL MOUNTED, PUSH TO TALK MICROPHONE	D1	(1) 3/4"	SWITCH HEIGHT	(1) MA	2,4.
MDT	DUAL MICROPHONE INPUT, WALL PLATE, UTP TRANSMITTER EXTENDER	D1	(1) 3/4"	RECEPTACLE HEIGHT	(1) UTP	2,4.
MAT	MICROPHONE AND AUXILIARY INPUT, WALL PLATE, UTP TRANSMITTER EXTENDER	D1	(1) 3/4"	RECEPTACLE HEIGHT	(1) UTP	2,4,11.
MXT	MICROPHONE AND AUXILIARY INPUT, WALL PLATE, UTP TRANSMITTER AUDIO ENCODER	D2	(1) 1"	RECEPTACLE HEIGHT	(1) UTP	2,4,11.
MT	DUAL MICROPHONE INPUT/OUTPUT WALL PLATE, UTP TRANSMITTER AUDIO ENCODER	D1	(1) 1"	RECEPTACLE HEIGHT	(1) UTP	2,4,11.
M2D	DUAL MICROPHONE INPUT/OUTPUT WALL PLATE, UTP TRANSMITTER AUDIO ENCODER	D2	(1) 1"	RECEPTACLE HEIGHT	(1) UTP	2,4,11.
M4D	FOUR MICROPHONE INPUT WALL PLATE, UTP TRANSMITTER AUDIO ENCODER	D2	(1) 1"	RECEPTACLE HEIGHT	(1) UTP	2,4,11.
AXT	BLUETOOTH AND AUXILIARY INPUT, WALL PLATE, UTP TRANSMITTER AUDIO ENCODER	D2	(1) 1"	SWITCH HEIGHT	(1) UTP	2,4,11.
CI	CREWCOM HEADSET INPUT, WALL PLATE	D1	(1) 3/4"	SWITCH HEIGHT	(1) MA	2,4.
CIS	CREWCOM WALL STATION, WALL PLATE	D3	(1) 3/4"	SWITCH HEIGHT	(1) MA	2,4.
BT	BLUETOOTH, WALL PLATE, AUDIO EXTENDER	D1	(1) 1"	SWITCH HEIGHT	(1) UTP	2,4,11.
VG	VGA INPUT, WALL PLATE	D1	(1) 1 1/4"	RECEPTACLE HEIGHT	(1) VG	2,4.
HD	HDMI INPUT, WALL PLATE	D1	(1) 1 1/4"	RECEPTACLE HEIGHT	(1) HD (1) LA	2,4.
HV	HDMI AND VGA INPUT, WALL PLATE	D2	(1) 1 1/4"	RECEPTACLE HEIGHT	(1) HD (1) VG	2,4.
EN#	AVoIP ENCODER, WALL PLATE (# IDENTIFIES UNIQUE PLATES)	SCH	(1) 1"		(1) UTP	2,4,11.
DC#	AVoIP DECODER, WALL PLATE (# IDENTIFIES UNIQUE PLATES)	SCH	(1) 1"		(1) UTP	2,4,11.
TxH	HDBaseT, HDMI INPUT TRANSMITTER, WALL PLATE	D1	(1) 1"	RECEPTACLE HEIGHT	(1) STP	2,4,11.
TxD	HDBaseT, HDMI AND VGA TRANSMITTER, WALL PLATE	D2	(1) 1"	RECEPTACLE HEIGHT	(1) STP	2,4,11.
TxM	HDBaseT, HDMI, DISPLAY PORT AND/OR VGA TRANSMITTER BOX, SURFACE MOUNTED			IN MILLWORK/ UNDER TABLE	(1) STP	2,4,11.
TxT	HDBaseT CATEGORY INPUT, WALL PLATE	D1	(1) 1"	RECEPTACLE HEIGHT	(1) STP	2,4,11.
RxH	HDBaseT, HDMI RECEIVER, WALL PLATE	D1	(1) 1"	AS NOTED	(1) STP	2,4,11.
US	USB INPUT, WALL PLATE, UTP EXTENSION	D1	(1) 1"	RECEPTACLE HEIGHT	(1) STP	2,4,11.
Rx	HDBaseT RECEIVER DEVICE, SURFACE MOUNTED		(1) 1"	IN MILLWORK/ UNDER TABLE	(1) STP	2,4,8,11.
CHV	HDMI AND VGA TRANSMITTER, WALL PLATE (CLASSROOM SYSTEM)	D2	(1) 1 1/4"	RECEPTACLE HEIGHT	(1) STP	2,4,11.
CHD	DUAL HDMI TRANSMITTER, WALL PLATE (CLASSROOM SYSTEM)	D2	(1) 1 1/4"	RECEPTACLE HEIGHT	(1) STP	2,4,11.
HDU	HDMI AND USB TRANSMITTER, WALL PLATE	D1	(1) 1"	RECEPTACLE HEIGHT	(2) STP	2,4,11.
CAL	2-WAY INTERCOMMUNICATION PUSHBUTTON STATION	D1	(1) 3/4"	SWITCH HEIGHT	AS NOTED	2,7,10.
CSA	CLASSROOM SOUND AMPLIFICATION SYSTEM		(1) 1 1/4" (1) 1"	IN MILLWORK/ AS NOTED		2,3.
IR	INFRARED SENSOR, WALL/CEILING	D1	(1) 3/4"	CEILING	(1) UTP OR (1) CT	2,6,11.
ALS	ASSISTIVE LISTENING SYSTEM ANTENNA/EMITTER, WALL/CEILING	A1	(1) 1"	AS NOTED	AS NOTED	2,6.
AT	AV ANTENNA, WALL/CEILING	D1	(1) 1"	AS NOTED	(1) AT	2,6.
V	VOLUME CONTROL	D1	(1) 1"	SWITCH HEIGHT	(1) S16	2,4.
SV	VOLUME CONTROL WITH SOURCE SELECTOR	D2	(1) 1"	SWITCH HEIGHT	(1) S16 (1) UTP	2,4,9,11.
TPT	TOUCH PANEL, TABLE TOP		(1) 1"	AS NOTED	(1) UTP	
TP#	TOUCH PANEL, WALL MOUNTED, REFER TO SPECIFICATIONS FOR TOUCH PANEL TYPE AND ORIENTATION	SCH	(1) 1"	SWITCH HEIGHT	(1) UTP	2,4,5,11.
KP#	KEYPAD, WALL MOUNTED, REFER TO SPECIFICATIONS FOR KEYPAD TYPE	SCH	(1) 1"	SWITCH HEIGHT	(1) CT or (1) UTP	2,4,10.
RS#	ROOM SCHEDULING TOUCHPANEL	SCH	(1) 1"	SWITCH HEIGHT	(1) STP	
TB#	TABLE/FURNITURE BOX, NUMBER REFERS TO TYPE REFER TO SPECIFICATIONS/DIAGRAMS FOR REQUIREMENTS			IN MILLWORK	SEE DIAGRAMS.	
	LOUDSPEAKER, WALL MOUNTED	C#	(1) 3/4"	AS NOTED	(1) S16	2,4.
	LOUDSPEAKER, ARRAY, CABINET, CLUSTER	A0	(1) 3/4"	AS NOTED	(1) S12	2,4.
	LOUDSPEAKER, CEILING RECESSED OR PENDANT	C#	(1) 3/4"	CEILING	(1) S16	2,7.
SB#	SOUND BAR, REFER TO SPECIFICATIONS FOR TYPE	D1	(1) 1"	UNDER DISPLAY OR AS NOTED		1,5.
X##	DISPLAY, REFER TO SPECIFICATIONS FOR DISPLAY TYPE AND SIZE	PER SCH	(1) 1 1/4" (1) 1"	AS NOTED	AS NOTED	4,13.
SC#	PROJECTION SCREEN REFER TO SPECIFICATIONS FOR SCREEN TYPE AND SIZE	(2) A0	(1) 3/4"	CEILING OR WALL	(1) UTP	2,7.
P#	PROJECTOR	D2	(1) 1 1/4"	CEILING OR AS NOTED	AS NOTED	2,6.
	AV CAMERA	C#	(1) 1"	AS NOTED	AS NOTED	1.
	EQUIPMENT CABINET/RACK	C#	SCH	AS NOTED		
CLG	EQUIPMENT CEILING RACK	C#	SCH	AS NOTED		
	EQUIPMENT 2-POST CABINET/RACK	C#	SCH	AS NOTED		
GP#	PASS THROUGH PLATE, # = NUMBER OF GANGS	D#	(1) 1-1/2"	AS NOTED		2.
J	JUNCTION BOX, ABOVE ACCESSIBLE CEILING	A0	AS NOTED	AS NOTED		
C##	CUSTOM JUNCTION BOX, REFER TO SCHEDULE AND DIAGRAM FOR EQUIPMENT, JUNCTION BOX AND CONDUIT	SCH	SCH	AS NOTED	AS NOTED	
FB	FLOOR BOX - REFER TO ELECTRICAL DOCUMENTS FOR MAKE/MODEL - REFER TO DIAGRAMS FOR AV DEVICE LAYOUT		AS NOTED		AS NOTED	
PT	POKE THRU - REFER TO ELECTRICAL DOCUMENTS FOR MAKE/MODEL - REFER TO DIAGRAMS FOR AV DEVICE LAYOUT		(1) 1 1/2"		AS NOTED	
	CONDUIT RUN CONCEALED IN WALL OR CEILING		AS NOTED			
	CONDUIT RUN CONCEALED IN FLOOR OR GROUND		AS NOTED			
	CONDUIT UP		AS NOTED			
	CONDUIT DOWN		AS NOTED			
	CONDUIT STUB LOCATION		AS NOTED			
	CONDUIT/CIRCUIT CONTINUATION		AS NOTED			
####	DEVICE/EQUIPMENT TYPE CALLOUT					
## #	ELEVATION VIEW TAG (# = VIEW NUMBER, ## = SHEET NUMBER)					
# ##	DIAGRAM CALLOUT TAG					

AUDIOVISUAL GENERAL NOTES

1. THIS SHEET SET SHOWS WORK AND MATERIALS BY DIVISION 26 AND DIVISION 27. SEE SPECIFICATIONS AND DRAWING NOTES FOR RESPONSIBILITY FOR EACH ITEM.
2. ELECTRICAL CONTRACTOR SHALL COORDINATE REQUIRED PROVISIONS WITH THE PROJECT AV SYSTEMS INTEGRATOR PRIOR TO INSTALLATION OF AV SYSTEM ROUGH-IN. WHERE CONDUIT AND JUNCTION BOX PROVISIONS ARE SIGNIFICANTLY DIFFERENT FROM THOSE SHOWN ON THE DRAWINGS, NOTIFY THE AV CONSULTANT IN WRITING OF THE REQUIREMENTS. WHERE MINOR MODIFICATIONS TO PROVISIONS ARE REQUIRED, THEY SHALL BE MADE AT NO ADDITIONAL COST AS A MATTER OF JOB COORDINATION.
3. BIDDERS SHALL THOROUGHLY ACQUAINT AND EXAMINE THE EXISTING PROJECT CONDITIONS UNDER WHICH THE WORK IS TO BE PERFORMED. INCLUDING THE COMPLETE SET OF PLANS AND SPECIFICATIONS COVERING THE ENTIRE PROJECT. BIDDERS SHALL BECOME FULLY CONVERSANT WITH THE TYPE OF GENERAL CONSTRUCTION AS WELL AS ALL PERTINENT FACTS AFFECTING THE COST OF CARRYING OUT THE WORK THEY WILL CONTRACT TO PERFORM AND BRING ANY DISCREPANCIES OR OMISSIONS FOUND IN THE DRAWINGS TO THE AV CONSULTANT'S ATTENTION BEFORE SUBMITTING BID.
4. AV SYSTEMS INTEGRATOR SHALL PROVIDE A FULLY FUNCTIONING SYSTEM IN EVERY RESPECT. ANY DISCREPANCIES IN THE DRAWINGS SHALL BE BROUGHT TO THE ATTENTION OF THE PROJECT AV CONSULTANT PRIOR TO BIDDING.
5. THE FOREGOING WORK SHALL BE COMPLETE IN EVERY RESPECT, AND ANY MATERIAL OR WORK NOT SPECIFICALLY MENTIONED OR SHOWN ON THE DRAWINGS. BUT NECESSARY TO FULLY COMPLETE THE WORK, SHALL BE FURNISHED BY THE PROJECT AV SYSTEMS INTEGRATOR.
6. NO CHANGES TO THE DESIGN SHALL BE MADE WITHOUT THE PROJECT AV CONSULTANT'S WRITTEN CONSENT.
7. WHERE APPLICABLE, AV SYSTEMS INTEGRATOR SHALL FOLLOW ALL MANUFACTURER'S INSTALLATION GUIDELINES.
8. REFER TO DRAWINGS FOR EXACT NUMBER OF COMPONENTS USED IF NOT SPECIFIED IN EQUIPMENT LIST.
9. COORDINATE EXACT SPEAKER LOCATIONS WITH ARCHITECTURAL REFLECTED CEILING PLANS. ANY CONFLICT SHALL BE BROUGHT TO THE ATTENTION OF THE PROJECT AV CONSULTANT PRIOR TO BIDDING.
10. CONFIRM AVAILABLE MOUNTING DEPTHS OF ALL SPEAKERS AND COMPARE WITH DEPTHS SHOWN ON SHOP DRAWINGS. BRING ALL POTENTIAL CONFLICT AREAS TO THE ATTENTION OF THE ARCHITECT AND AV CONSULTANT PRIOR TO RELEASE.
11. INSTALL/SUSPEND ALL AUDIOVISUAL SYSTEMS EQUIPMENT IN COMPLIANCE WITH SEISMIC CODES, MANUFACTURER'S WRITTEN INSTRUCTIONS, AND INDUSTRY BEST PRACTICES. DURING THE SUBMITTAL PROCESS, PROVIDE SHOP DRAWINGS WHICH DETAIL PROPOSED MOUNTING FOR ALL SUCH EQUIPMENT.
12. ALL TWISTED-PAIR (U/UTP, F/UTP, U/FTP, S/FTP) CATEGORY TYPE CABLING SHALL BE TERMINATED BY CERTIFIED DATA TECHNICIANS. TEST PER SPECIFICATIONS REQUIREMENTS AND PROVIDE DATA TO AV CONSULTANT.
13. ALL HDBaseT SIGNAL CABLING, TERMINATIONS, AND TERMINATION HARDWARE SHALL COMPLY WITH TIA/EIA WIRING CONFIGURATION T568 B. ALL HDBaseT SIGNAL CABLING SHALL BE SHIELDED/FOIL (SF/UTP) CATEGORY TYPE CABLE.
14. CONDUCT A RADIO FREQUENCY AUDIT OF THE SITE PRIOR TO SELECTING RF OPERATIONAL FREQUENCIES. AV SYSTEMS INTEGRATOR TO ENSURE INTERFERENCE FREE OPERATION OF ALL RF DEVICES. AV SYSTEMS INTEGRATOR SHALL COORDINATE AUDIT RESULTS WITH MANUFACTURER PRIOR TO PURCHASING RF EQUIPMENT.
15. PROVIDE RACK MOUNT KITS FOR ALL RACK MOUNTED EQUIPMENT. PROVIDE CUSTOM RACK MOUNT KITS WHEN NOT AVAILABLE FROM THE EQUIPMENT MANUFACTURER.
16. PROVIDE SURGE PROTECTION DEVICE (SPD) IN ALL AV EQUIPMENT RACKS.
17. ALL AV EQUIPMENT RACKS SHALL BE GROUNDED AND BONDED TO MEET OR EXCEED THE REQUIREMENTS OF THE NATIONAL ELECTRIC CODE (NED), IEC 1000-5-2 ANSI/J-STD-607-A.
18. ALL AV EQUIPMENT SHALL BE GROUNDED PER MANUFACTURER'S SPECIFICATIONS.
19. PROVIDE MANUFACTURER RECOMMENDED POWER SUPPLIES OR TRANSFORMERS FOR ALL SPECIFIED EQUIPMENT.
20. THE CONTRACTOR SHALL TAKE FULL RESPONSIBILITY FOR LACK OF COORDINATION WITH AV CONSULTANT AS ADDRESSED IN THE DOCUMENTS
21. UNLESS SPECIFICALLY SPECIFIED OR NOTED PROVIDE COMMERCIAL QUALITY EQUIPMENT, MATERIALS AND COMPONENTS DESIGNED FOR CONTINUOUS USE. CONSUMER QUALITY COMPONENTS ARE NOT ACCEPTABLE.

AUDIOVISUAL SHEET INDEX

T001 AUDIOVISUAL SYMBOLS AND NOTES
T002 AUDIOVISUAL SCHEDULES AND NOTES
T222 FIRST FLOOR AUDIOVISUAL PLAN AREA - A
T223 FIRST FLOOR AUDIOVISUAL PLAN AREA - B
T224 FIRST FLOOR AUDIOVISUAL RCP AREA - A
T225 FIRST FLOOR AUDIOVISUAL RCP AREA - B
T501 AUDIOVISUAL ELEVATIONS
T700 AUDIOVISUAL DIAGRAMS
T701 AUDIOVISUAL DIAGRAMS
T702 AUDIOVISUAL DIAGRAMS

T311 LEVEL 1 INTERCOM OVERALL

MHTN ARCHITECTS

MHTN Architects, Inc.
280 South 400 West
Suite 250
Salt Lake City, Utah 84101
Telephone (801) 595-6700
www.mhtn.com

BNA CONSULTING
4225 Lake Park Blvd, Suite 275
West Valley City, UT 84120
P: 801.532.2196
F: 801.532.2305
www.bnaconsulting.com
SALT LAKE ST. GEORGE

JORDAN SCHOOL DISTRICT

JORDAN LEARNING CENTER

3706 WEST 9800 SOUTH
SOUTH JORDAN, UT 84009

©2023 MHTN ARCHITECTS, INC.

Confidentiality Notice:
This document is intended for use on the Project identified herein by individuals and companies involved in the design, permitting, bidding and construction of the Project. MHTN Architects, Inc. grants limited rights to distribute and reproduce this document for this express purpose only. Distribution, printing or copying this document for purposes other than those indicated is strictly prohibited. If a digital copy of this document is received in error, please delete it.

SEAL

PROFESSIONAL ENGINEER 8/29/2024 BRIAN HICKS No. 7709037-2202 STATE OF UTAH

MHTN PROJECT NO. 2024528

Original drawing is 30 x 42. Do not scale contents of this drawing.

REVISIONS
CONTRACTOR TO VERIFY DRAWINGS IN FIELD USE REFLECT LAST REVISION DATE.

NO.	DATE	DESCRIPTION

ISSUE
CONSTRUCTION DOCUMENTS
AUGUST 29, 2024

SHEET NAME
AUDIOVISUAL SYMBOLS AND NOTES

SHEET NUMBER
T001

Autodesk Docs://2024528 JSD Retail Remodel/24133 - JSD LEARNING Center ELEC V24.rvt
8/28/2024 10:16:24 AM

PROJECTOR SCREEN SCHEDULE

TYPE	IMAGE SIZE (Ix) IN INCHES					BOTTOM OF IMAGE AFF	CASE DIMENSIONS (Cx) IN INCHES			WEIGHT	OPERATION	PROJECTION ORIENTATION	CONTROL TYPE	MOUNTING TYPE	NOTES	Type Comments
	DIAGONAL	HEIGHT	WIDTH	ASPECT RATIO	BLACK DROP LENGTH		LENGTH	WIDTH	DEPTH							
SC1	113	59 7/8"	95 13/16"	16:10	12"	26"	103 5/16"	5 7/8"	3 11/16"	145 LBS	MANUAL	FRONT	MANUAL	WALL MOUNTED		AUDIOVISUAL

AV FLAT PANEL MONITOR SCHEDULE

TYPE	IMAGE SIZE (Ix) IN INCHES			MONITOR DIMENSIONS (Cx) IN INCHES			WEIGHT	CONTROL TYPE	NOTES
	DIAGONAL	HEIGHT	WIDTH	HEIGHT	WIDTH	DEPTH			
D50	55	27 1/16"	47 15/16"	27 7/8"	48 5/8"	2 1/2"	31 LBS	RS-232, IP	
D55	55	27 1/16"	47 15/16"	27 7/8"	48 5/8"	2 1/2"	31 LBS	RS-232, IP	CONTROLL BY LOCAL REMOTE UNLESS OTHERWISE NOTED.
D65	65	32"	56 5/8"	32 7/8"	57 5/16"	2 1/2"	60 LBS	RS-232, IP	
D75	75	36 15/16"	65 5/16"	37 7/8"	66 1/4"	2 1/2"	85 LBS	RS-232, IP	
D86	86	42 5/16"	74 15/16"	43 3/16"	75 13/16"	2 1/2"	103 LBS	RS-232, IP	
L01	136	66 15/16"	118 1/2"	67 3/4"	119 3/16"	2"	267 LBS	RS-232, IP	

AV CUSTOM BACK BOX SCHEDULE

TYPE	MANUFACTURER	MODEL	BOX DIMENSIONS (Cx) IN INCHES			CONDUIT'S	MOUNTING TYPE	MOUNTING HEIGHT	NOTES
			HEIGHT	WIDTH	DEPTH				
AT	HOFFMAN	ASE SERIES	4 3/8"	2 5/8"	2 1/8"	(1) 4", (3) 2", (5) 1" AS INDICATED ON DRAWINGS	RECESSED	HORIZONTAL	
C21	HUBBELL	ASE NK SERIES	4 3/16"	2 1/8"	2 1/8"		RECESSED	HORIZONTAL	
CSA	HUBBELL	HBL263	4 1/8"	2 1/8"	2 1/8"	(2) 1"	RECESSED	HORIZONTAL	3-GANG
TP5	HUBBELL	HBL260	4 3/8"	2 5/8"	2 1/8"	(1) 4", (3) 2", (5) 1"	RECESSED	HORIZONTAL	
TP7	HUBBELL	HBL260	4 3/8"	2 5/8"	2 1/8"	(1) 4", (3) 2", (5) 1"	RECESSED	HORIZONTAL	

AV EQUIPMENT RACK SCHEDULE

TYPE	DIMENSIONS			RU's	JUNCTION BOX	MOUNTING TYPE	NOTES
	HEIGHT	WIDTH	DEPTH				
R1	19 1/8"	19 3/8"	17 1/4"	12	C21	CABINET	
R2	19 1/8"	19 3/8"	17 1/4"	12	C21	CABINET	

AV LOUDSPEAKER SCHEDULE

TYPE	DIMENSIONS				SHAPE	WEIGHT	INSTALLATION	NOTES
	WIDTH (H)	WIDTH (V)	DIAMETER	DEPTH				
C4	0"	0"	12"	6"	ROUND	9.5 LBS	RECESSED	LOW PROFILE LOUDSPEAKER
P6	0"	0"	12 5/16"	13"	ROUND	11.5 LBS	PENDENT	
P8	0"	0"	13 1/8"	13.5/8"	ROUND	16.7 LBS	PENDENT	

FLAT PANEL WALL BOX SCHEDULE

TYPE	DESCRIPTION	DATA	COAX	DUPLEX	AV	MFR.	MODEL
DP01	WALL MOUNTED FLAT PANEL WITH (2) DATA DROPS, (1) COAX, (1) SURGE PROTECTED DUPLEX, (1) AV PASS THROUGH	(2) DATA DROPS	(1) COAX	(1) SURGE PROTECTED DUPLEX	(1) AV PASS THROUGH	CHIEF, LEGRAND, FSR	PAC 525, EPB4, PWB4

INTERCOM LOUDSPEAKER SCHEDULE

TYPE	DIMENSIONS				SHAPE	WEIGHT	INSTALLATION	NOTES
	WIDTH (H)	WIDTH (V)	DIAMETER	DEPTH				
IC2			12 5/16"	4 1/2"	ROUND	6 LBS	CEILING RECESSED	HARD LID INTERCOM LOUDSPEAKER

CONDUIT SCHEDULE LEGEND:

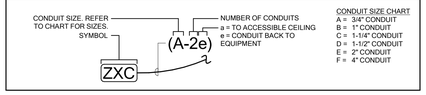

CONDUIT SIZE CHART
A = 3/4" CONDUIT
B = 1" CONDUIT
C = 1-1/4" CONDUIT
D = 1-1/2" CONDUIT
E = 2" CONDUIT
F = 4" CONDUIT

ROUGH-IN JUNCTION BOX LEGEND:

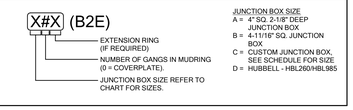

JUNCTION BOX SIZE
A = 4" SQ. 2-1/8" DEEP JUNCTION BOX.
B = 4-11/16" SQ. JUNCTION BOX
C = CUSTOM JUNCTION BOX, SEE SCHEDULE FOR SIZE
D = HUBBELL - HBL260/HBL585

LOUDSPEAKER LEGEND:

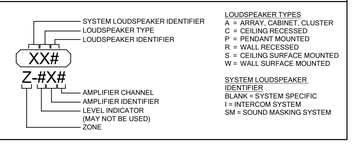

LOUDSPEAKER TYPES
A = ARRAY, CABINET, CLUSTER
C = CEILING RECESSED
P = PENDANT MOUNTED
R = WALL RECESSED
S = CEILING SURFACE MOUNTED
W = WALL SURFACE MOUNTED

SYSTEM LOUDSPEAKER IDENTIFIER
BLANK = SYSTEM SPECIFIC
I = INTERCOM SYSTEM
SM = SOUND MASKING SYSTEM

FLAT PANEL MONITOR LEGEND:

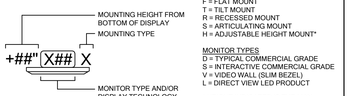

MOUNT TYPES
CLG = CEILING (POLE) MOUNT
F = FLAT MOUNT
T = TILT MOUNT
R = RECESSED MOUNT
S = ARTICULATING MOUNT
H = ADJUSTABLE HEIGHT MOUNT*

MONITOR TYPES
D = TYPICAL COMMERCIAL GRADE
S = INTERACTIVE COMMERCIAL GRADE
V = VIDEO WALL (SLIM BEZEL)
L = DIRECT VIEW LED PRODUCT

* HEIGHT INDICATED IS THE MAX HEIGHT, MOUNT SHALL ADJUST DOWN

SIGNAL FLOW LEGEND:

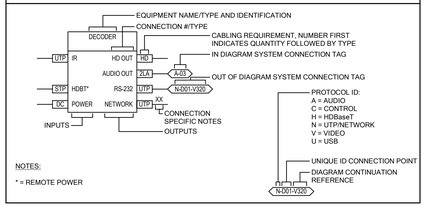

LOW VOLTAGE SCOPE OF WORK

NOTES:...

1. RESPONSIBILITY MATRIX DELINEATES THE SCOPE OF WORK BETWEEN THE OWNER AND THE CONTRACTORS. CONTRACTORS ARE RESPONSIBLE TO COORDINATE BETWEEN EACH OTHER FOR THE FULL SCOPE OF WORK THEY ARE RESPONSIBLE FOR.
2. ADDITIONAL NOTES MAY BE PRESENT WITHIN THE CONTRACT DOCUMENTS INDICATING SPECIFIC EQUIPMENT PROVIDED BY OTHERS OR REQUIRE INSTALLATION BY SPECIFIC DIVISIONS.
3. INSTALLER PROVIDING THE SYSTEM CABLING SHALL PROVIDE THE CABLING, TERMINATION AND CERTIFICATION FOR A COMPLETE SYSTEM INSTALLATION, UNLESS OTHERWISE SPECIFICALLY NOTED WITHIN THE CONTRACT DOCUMENTS.
4. INSTALLER TO VERIFY WITH CONTRACT DOCUMENTS FOR THE CONNECTION TYPE (MALE OR FEMALE) REQUIRED FOR EACH...
5. REFER TO DRAWINGS AND SPECIFICATIONS FOR ADDITIONAL REQUIREMENTS.

LEGEND

AC	ACCESS CONTROL CONTRACTOR
AV	AUDIOVISUAL CONTRACTOR
DC	DOOR HARDWARE CONTRACTOR
EC	ELECTRICAL CONTRACTOR
FR	FURNITURE CONTRACTOR
GC	GENERAL CONTRACTOR
IC	INTRUSTION DETECTION CONTRACTOR
LVC	TELEPHONE/DATA CABLING
NIC	CONTRACTOR
OWNER	NOT IN CONTRACT
SC	OWNER
SPEC	VIDEO SURVEILLANCE CONTRACTOR SEE SPECIFICATIONS

DESCRIPTION	FURNISHED BY	INSTALLED BY
GENERAL		
EQUIPMENT POWER (120V, 208V, 240V, 277V, 480V)	EC	EC
ROUGH OR FINISHED TRIM, CASEWORK, MILLWORK, EQUIPMENT RACK PEDESTALS, STRUCTURAL WORK FOR SPECIAL CONSTRUCTION	GC	GC
STRUCTURAL BACKING AND SUPPORT FOR WALL MOUNTED EQUIPMENT	GC	GC
SUPPORT CABLES, PRE-CONSTRUCTION KITS, TILE BRIDGES AND/OR BACK BOXES FOR CEILING MOUNTED DEVICES.	EC	EC
ACCESS CONTROL		
ACCESS CONTROL SERVER	AC	AC
ACCESS CONTROL SOFTWARE	OWNER	OWNER
CATEGORY CABLE / FIBER OPTIC CABLE	AC	AC
DOOR CONTROLLER POWER SUPPLIES	AC	AC
DOOR CONTROLLERS	AC	AC
DOOR LOCKING ELECTRONIC HARDWARE	DC	DC
LOCK & ACCESS CONTROL POWER SUPPLIES	DC	AC
NETWORK SWITCHES WITHIN THE ER(MDF)/TR(IDF) FOR ACCESS CONTROL AND/OR INTRUSION SYSTEMS	OWNER	OWNER
NON-CATEGORY CABLE	AC	AC
ROUGH-IN - CONDUIT W/PULL STRING, JUNCTION BOXES, FLOOR BOXES, ETC.	EC	EC
AUDIOVISUAL		
CATEGORY CABLE / FIBER OPTIC CABLE FROM DEVICE LOCATION TO TR(MDF)ER(IDF) TERMINATED IN PATCH PANEL	LVC	LVC
CATEGORY CABLING FROM DEVICE TO DEVICE, NOT TERMINTATED IN PATCH PANELS WITHIN THE ER(MDF/TR(IDF)	AV	AV
COAXIAL CABLE	LVC	LVC
CUSTOM AUDIOVISUAL CONNECTOR INSERT PLATE FOR FLOOR BOXES AND/OR WALL PLATES	AV	AV
EQUIPMENT RACKS NOT WITHIN THE ER(MDF)/TR(IDF) FOR SYSTEM COMPONENTS	AV	AV
FLAT PANEL MONITOR MOUNTS	AV	AV
FLAT PANEL MONITORS	AV	AV
FURNITURE BOX TABLE CUTTING	GC	GC
FURNITURE BOXES WITH AUDIOVISUAL CONNECTIONS AND/OR CABLES	AV	AV
INSTRUCTOR'S LECTERNS/CONSOLES WITH INTEGRATED AUDIOVISUAL SYSTEMS COMPONENTS	AV	AV
INTERACTIVE FLAT PANEL MONITORS AND MOUNTS	OWNER	OWNER
LIGHTING CONTROL SYSTEM INTERFACE DEVICE(S) AND CABLING TO AV CONTROL SYSTEM. TERMINATION INTO AV SYSTEM CONTROLLER BY AV INSTALLER	EC	EC
MOTORIZED SHADE CONTROL SYSTEM INTERFACE DEVICE(S) AND CABLING TO AV CONTROL SYSTEM. TERMINATION INTO AV SYSTEM	AV	AV
NETWORK SWITCHES WITHIN THE ER(MDF)/TR(IDF) FOR AUDIOVISUAL NETWORK, AUDIO, CONTROL AND VIDEO	OWNER	OWNER
PROJECTOR SCREEN MANUAL AND/OR MOTORIZED HOUSING	AV	AV
PROJECTOR SCREEN MANUAL AND/OR MOTORIZED ROLLER	AV	AV
PROJECTOR SCREEN, FIXED FRAME (SIMILAR TO WHITEBOARD)	GC	GC
ROUGH-IN - CONDUIT W/PULL STRING, JUNCTION BOXES, FLOOR BOXES, FLAT PANEL DISPLAY BACK BOXES, ETC.	EC	EC
SPECIALTY BACK BOXES, TILE BRIDGES, SUPPORT CABLES, PRECONSTRUCTION KITS, ETC. FOR AUDIOVISUAL COMPONENTS (TOUCH PANELS, LOUDSPEAKERS, KEYPADS, ETC.)	AV	AV
VIDEO PROJECTOR	AV	AV
VIDEO PROJECTOR MOUNTS	AV	AV
SECURITY		
CAMERA ETHERNET EXTENDERS AND POE INJECTORS	LVC	LVC
CATEGORY CABLE / FIBER OPTIC CABLE	LVC	LVC
EQUIPMENT RACKS WITHIN THE ER(MDF)/TR(IDF) FOR SYSTEM COMPONENTS	LVC	LVC
NETWORK SWITCHES WITHIN THE ER(MDF)/TR(IDF) FOR VIDEO SURVEILLANCE	OWNER	OWNER
POE DATA SWITCHES	OWNER	OWNER
ROUGH-IN - CONDUIT W/PULL STRING, JUNCTION BOXES, FLOOR BOXES, ETC.	EC	SC
SECURITY CAMERA MOUNTS	OWNER	OWNER
SECURITY CAMERAS	OWNER	OWNER
SURGE SUPPRESSION	SC	SC
TERMINATE CABLE (PATCH PANEL AND DATA PORT), INCLUDING TESTING	LVC	LVC
VIDEO MANAGEMENT SOFTWARE (VMS) AND CAMERA LICENSES	OWNER	OWNER
TELEPHONE / DATA		
CATEGORY CABLE / FIBER OPTIC CABLE	LVC	LVC
CUSTOM TELECOMMUNICATIONS CONNECTOR INSERT PLATE FOR FLOOR BOXES AND/OR WALL PLATES	EC	EC
DATA SWITCHES, SERVERS, FIREWALL, ETC	OWNER	OWNER
EQUIPMENT RACKS WITHIN THE ER(MDF)/TR(IDF) FOR SYSTEM COMPONENTS	LVC	LVC
PATCH CABLES FOR DEVICES WITHIN THE TR/ER FOR CONNECTION BETWEEN PATCH PANELS AND NETWORK SWITCHES	LVC	LVC
RACK MOUNT UPS, POWER DISTRIBUTION UNIT (PDU)	LVC	LVC
ROUGH-IN - CONDUIT W/PULL STRING, JUNCTION BOXES, FLOOR BOXES, FLAT PANEL DISPLAY BACK BOXES, ETC.	EC	EC
TERMINATE CABLE (PATCH PANEL AND DATA PORT), INCLUDING TESTING	OWNER	OWNER
WIRELESS ACCESS POINTS	OWNER	OWNER

MHTN ARCHITECTS

MHTN Architects, Inc.
280 South 400 West
Suite 250
Salt Lake City, Utah 84101
Telephone (801) 595-6700
www.mhtn.com

BNA CONSULTING
4225 Lake Park Blvd, Suite 275
West Valley City, UT 84120
P: 801.532.2196
F: 801.532.2305
www.bnaconsulting.com
SALT LAKE ST. GEORGE

JORDAN SCHOOL DISTRICT

JORDAN LEARNING CENTER

3706 WEST 9800 SOUTH
SOUTH JORDAN, UT 84009

©2023 MHTN ARCHITECTS, INC.

Confidentiality Notice:
This document is intended for use on the Project identified herein by individuals and companies involved in the design, permitting, bidding and construction of the Project. MHTN Architects, Inc. grants limited rights to distribute and reproduce this document for this express purpose only. Distribution, printing or copying this document for purposes other than those indicated is strictly prohibited. If a digital copy of this document is received in error, please delete it.

SEAL

MHTN PROJECT NO. 2024528

Original drawing is 30 x 42. Do not scale contents of this drawing.

REVISIONS
CONTRACTOR TO VERIFY DRAWINGS IN FIELD USE REFLECT LAST REVISION DATE.

NO.△	DATE	DESCRIPTION

ISSUE
CONSTRUCTION DOCUMENTS
AUGUST 29, 2024

SHEET NAME
AUDIOVISUAL SCHEDULES AND NOTES

SHEET NUMBER
T002

Autodesk Docs://2024528 JSD Retail Remodel/24133 - JSD_LEARNING Center ELEC V24.rvt
8/28/2024 10:16:31 AM

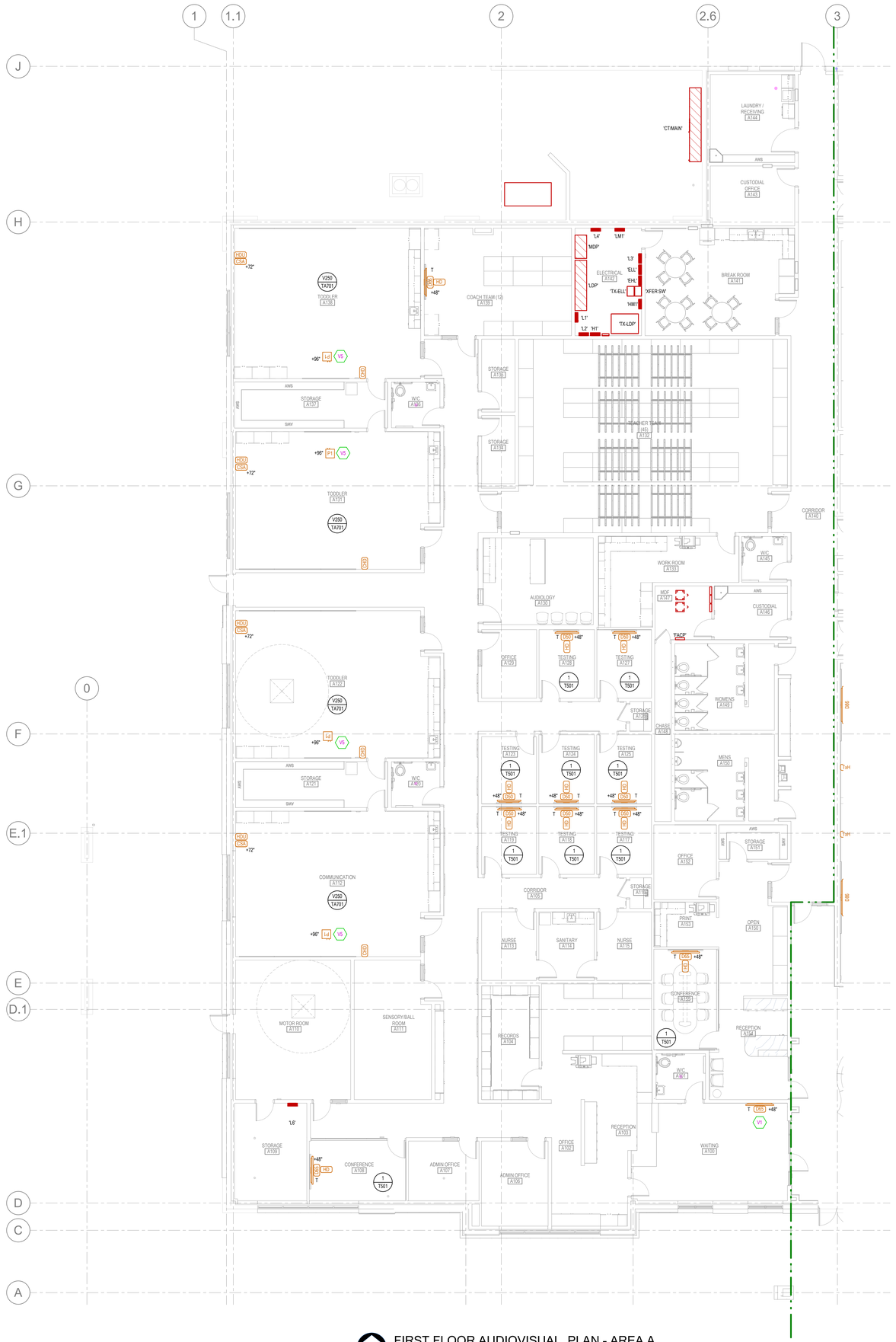

FIRST FLOOR AUDIOVISUAL PLAN - AREA A
SCALE = 1/8" = 1'-0"

SHEET KEYNOTES

V1	SOURCE INPUT TBD. VIDEOS FOR WAITING ROOM.
V5	CENTER IMAGE ON WHITEBOARD.

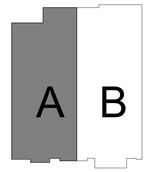

KEY PLAN

MHTN ARCHITECTS

MHTN Architects, Inc.
280 South 400 West
Suite 250
Salt Lake City, Utah 84101
Telephone (801) 595-6700
www.mhtn.com

BNA CONSULTING
4225 Lake Park Blvd, Suite 275
West Valley City, UT 84120
P: 801.532.2196
F: 801.532.2305
www.bnaconsulting.com
SALT LAKE ST. GEORGE

JORDAN SCHOOL DISTRICT

JORDAN LEARNING CENTER

3706 WEST 9800 SOUTH
SOUTH JORDAN, UT 84009

©2023 MHTN ARCHITECTS, INC.

Confidentiality Notice:
This document is intended for use on the Project identified herein by individuals and companies involved in the design, permitting, bidding and construction of the Project. MHTN Architects, Inc. grants limited rights to distribute and reproduce this document for this express purpose only. Distribution, printing or copying this document for purposes other than those indicated is strictly prohibited. If a digital copy of this document is received in error, please delete it.

SEAL

MHTN PROJECT NO. 2024528

Original drawing is 30 x 42. Do not scale contents of this drawing.

REVISIONS
CONTRACTOR TO VERIFY DRAWINGS IN FIELD USE REFLECT LAST REVISION DATE.

NO.	DATE	DESCRIPTION

ISSUE
CONSTRUCTION DOCUMENTS
AUGUST 29, 2024

SHEET NAME
FIRST FLOOR AUDIOVISUAL PLAN AREA - A

SHEET NUMBER
T222

Autodesk Docs://2024528 JSD Retail Remodel/24133 - JSD LEARNING Center ELEC V24.rvt
8/28/2024 10:16:34 AM

FIRST FLOOR AUDIOVISUAL PLAN - AREA B

SCALE = 1/8" = 1'-0"

SHEET KEYNOTES

V6	MOUNT ON ARTICULATING ARM. COORDINATE WITH ARCHITECT BEFORE INSTALLATION.

MHTN ARCHITECTS

MHTN Architects, Inc.
280 South 400 West
Suite 250
Salt Lake City, Utah 84101
Telephone (801) 595-6700
www.mhtn.com

BNA CONSULTING
4225 Lake Park Blvd, Suite 275
West Valley City, UT 84120

P: 801.532.2196
F: 801.532.2305

www.bnaconsulting.com

SALT LAKE ST. GEORGE

JORDAN SCHOOL DISTRICT

JORDAN LEARNING CENTER

3706 WEST 9800 SOUTH
SOUTH JORDAN, UT 84009

©2023 MHTN ARCHITECTS, INC.

Confidentiality Notice:
This document is intended for use on the Project identified herein by individuals and companies involved in the design, permitting, bidding and construction of the Project. MHTN Architects, Inc. grants limited rights to distribute and reproduce this document for this express purpose only. Distribution, printing or copying this document for purposes other than those indicated is strictly prohibited. If a digital copy of this document is received in error, please delete it.

SEAL

MHTN PROJECT NO. 2024528

Original drawing is 30 x 42. Do not scale contents of this drawing.

REVISIONS
CONTRACTOR TO VERIFY DRAWINGS IN FIELD. USE REFLECT LAST REVISION DATE.

NO.	DATE	DESCRIPTION

ISSUE
CONSTRUCTION DOCUMENTS
AUGUST 29, 2024

SHEET NAME
FIRST FLOOR AUDIOVISUAL PLAN AREA - B

SHEET NUMBER
T223

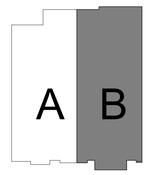

KEY PLAN

Autodesk Docs://2024528 JSD Retail Remodel/24133 - JSD_LEARNING Center ELEC V24.rvt
8/28/2024 10:10:37 AM

FIRST FLOOR AUDIOVISUAL RCP AREA - A

SCALE = 1/8" = 1'-0"

SHEET KEYNOTES

MHTN ARCHITECTS

MHTN Architects, Inc.
280 South 400 West
Suite 250
Salt Lake City, Utah 84101
Telephone (801) 595-6700
www.mhtn.com

BNA CONSULTING
4225 Lake Park Blvd, Suite 275
West Valley City, UT 84120

P: 801.532.2196
F: 801.532.2305

www.bnaconsulting.com

SALT LAKE ST.GEORGE

JORDAN SCHOOL DISTRICT

JORDAN LEARNING CENTER

3706 WEST 9800 SOUTH
SOUTH JORDAN, UT 84009

©2023 MHTN ARCHITECTS, INC.

Confidentiality Notice:
This document is intended for use on the Project identified herein by individuals and companies involved in the design, permitting, bidding and construction of the Project. MHTN Architects, Inc. grants limited rights to distribute and reproduce this document for this express purpose only. Distribution, printing or copying this document for purposes other than those indicated is strictly prohibited. If a digital copy of this document is received in error, please delete it.

SEAL

MHTN PROJECT NO. 2024528

Original drawing is 30 x 42. Do not scale contents of this drawing.

REVISIONS
CONTRACTOR TO VERIFY DRAWINGS IN FIELD USE REFLECT LAST REVISION DATE.

NO.△	DATE	DESCRIPTION

ISSUE
CONSTRUCTION DOCUMENTS
AUGUST 29, 2024

SHEET NAME
FIRST FLOOR AUDIOVISUAL RCP AREA - A

SHEET NUMBER
T224

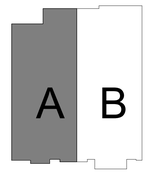

KEY PLAN

Autodesk Docs://2024528 JSD Retail Remodel/24133 - JSD_LEARNING Center ELEC V24.rvt
8/28/2024 10:16:40 AM

FIRST FLOOR AUDIOVISUAL RCP AREA - B
SCALE = 1/8" = 1'-0"

SHEET KEYNOTES

V2	DOCUMENT CAMERA.VERIFY LOCATION WITH ARCHITECT BEFORE INSTALLING.
V4	BOTTOM OF PENDANT LOUDSPEAKERS TO BE FLUSH WITH BOTTOM OF BEAMS / CLOUDS.
V8	COORDINATE ANTENNA MOUNTING LOCATION WITH ARCHITECT.

MHTN ARCHITECTS

MHTN Architects, Inc.
280 South 400 West
Suite 250
Salt Lake City, Utah 84101
Telephone (801) 595-6700
www.mhtn.com

BNA CONSULTING
4225 Lake Park Blvd, Suite 275
West Valley City, UT 84120
P: 801.532.2196
F: 801.532.2305
www.bnaconsulting.com
SALT LAKE ST. GEORGE

JORDAN SCHOOL DISTRICT

JORDAN LEARNING CENTER

3706 WEST 9800 SOUTH
SOUTH JORDAN, UT 84009

©2023 MHTN ARCHITECTS, INC.

Confidentiality Notice
This document is intended for use on the Project identified herein by individuals and companies involved in the design, permitting, bidding and construction of the Project. MHTN Architects, Inc. grants limited rights to distribute and reproduce this document for this express purpose only. Distribution, printing or copying this document for purposes other than those indicated is strictly prohibited. If a digital copy of this document is received in error, please delete it.

SEAL

PROFESSIONAL ENGINEER
8/29/2024
BRIAN HICKS
No. 7709037-2202
STATE OF UTAH

MHTN PROJECT NO. 2024528

Original drawing is 30 x 42. Do not scale contents of this drawing.

REVISIONS
CONTRACTOR TO VERIFY DRAWINGS IN FIELD USE REFLECT LAST REVISION DATE.

NO.△	DATE	DESCRIPTION

ISSUE
CONSTRUCTION DOCUMENTS
AUGUST 29, 2024

SHEET NAME
FIRST FLOOR AUDIOVISUAL RCP AREA - B

SHEET NUMBER
T225

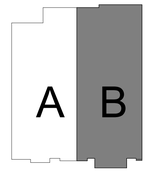

KEY PLAN

Autodesk Docs://2024528 JSD Retail Remodel/24133 - JSD_LEARNING Center ELEC \ V24.rvt
8/28/2024 10:16:43 AM

SHEET KEYNOTES

V6	MOUNT ON ARTICULATING ARM. COORDINATE WITH ARCHITECT BEFORE INSTALLATION.
V7	INTERCOM HEAD-END. VERIFY LOCATION WITH ARCHITECT BEFORE INSTALLING.

FIRST FLOOR INTERCOM OVERALL RCP

SCALE = 1" = 10'-0"

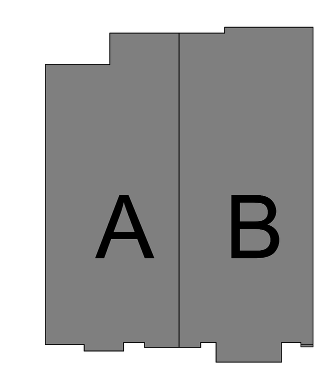

KEY PLAN

Autodesk Docs://2024528 JSD Retail Remodel/24133 - JSD LEARNING Center ELEC V24.rvt
8/28/2024 10:16:47 AM

MHTN ARCHITECTS

MHTN Architects, Inc.
280 South 400 West
Suite 250
Salt Lake City, Utah 84101
Telephone (801) 595-6700
www.mhtn.com

BNA CONSULTING
4225 Lake Park Blvd, Suite 275
West Valley City, UT 84120
P: 801.532.2196
F: 801.532.2305
www.bnaconsulting.com
SALT LAKE ST. GEORGE

JORDAN SCHOOL DISTRICT

JORDAN LEARNING CENTER

3706 WEST 9800 SOUTH
SOUTH JORDAN, UT 84009

©2023 MHTN ARCHITECTS, INC.

Confidentiality Notice:
This document is intended for use on the Project identified herein by individuals and companies involved in the design, permitting, bidding and construction of the Project. MHTN Architects, Inc. grants limited rights to distribute and reproduce this document for this express purpose only. Distribution, printing or copying this document for purposes other than those indicated is strictly prohibited. If a digital copy of this document is received in error, please delete it.

SEAL

PROFESSIONAL ENGINEER 8/29/2024 BRIAN HICKS No. 7709037-2202 STATE OF UTAH

MHTN PROJECT NO. 2024528

Original drawing is 30 x 42. Do not scale contents of this drawing.

REVISIONS
CONTRACTOR TO VERIFY DRAWINGS IN FIELD USE REFLECT LAST REVISION DATE.

NO. △	DATE	DESCRIPTION

ISSUE
CONSTRUCTION DOCUMENTS
AUGUST 29, 2024

SHEET NAME
LEVEL 1 INTERCOM OVERALL

SHEET NUMBER
T311

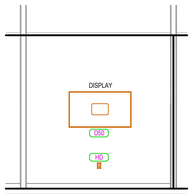

1 CONFERENCE ROOM/TESTING ROOM ELEVATIONS
SCALE = 1/4" = 1'-0"

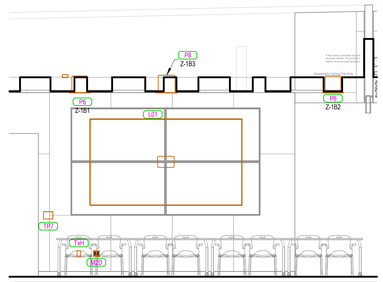

2 MULTIPURPOSE ROOM EAST ELEVATIONS
SCALE = 1/4" = 1'-0"

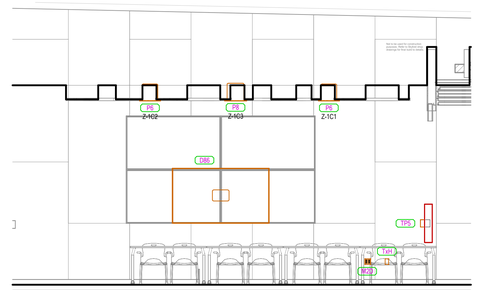

3 MULTIPURPOSE ROOM WEST ELEVATIONS
SCALE = 1/4" = 1'-0"

DIAGRAM 4 RACK ELEVATION - MULTI-PURPOSE/STUDENT COMMONS
NTS

MHTN ARCHITECTS
MHTN Architects, Inc.
280 South 400 West
Suite 250
Salt Lake City, Utah 84101
Telephone (801) 595-6700
www.mhtn.com

BNA CONSULTING
4225 Lake Park Blvd, Suite 275
West Valley City, UT 84120
P: 801.532.2196
F: 801.532.2305
www.bnaconsulting.com
SALT LAKE ST. GEORGE

JORDAN SCHOOL DISTRICT

JORDAN LEARNING CENTER

3706 WEST 9800 SOUTH
SOUTH JORDAN, UT 84009

©2023 MHTN ARCHITECTS, INC.
Confidentiality Notice:
This document is intended for use on the Project identified herein by individuals and companies involved in the design, permitting, bidding and construction of the Project. MHTN Architects, Inc. grants limited rights to distribute and reproduce this document for this express purpose only. Distribution, printing or copying this document for purposes other than those indicated is strictly prohibited. If a digital copy of this document is received in error, please delete it.

SEAL

MHTN PROJECT NO. 2024528

Original drawing is 30 x 42. Do not scale contents of this drawing.

REVISIONS
CONTRACTOR TO VERIFY DRAWINGS IN FIELD USE REFLECT LAST REVISION DATE.

NO.	DATE	DESCRIPTION

ISSUE
CONSTRUCTION DOCUMENTS
AUGUST 29, 2024

SHEET NAME
AUDIOVISUAL ELEVATIONS

SHEET NUMBER
T501

Autodesk Docs://2024528 JSD Retail Remodel/24133 - JSD_ LEARNING Center ELEC V24.rvt
8/28/2024 10:16:49 AM

DIAGRAM NOTES: (#)

1. LOCATED IN RACK 'R1'
2. MOUNT DEVICE BEHIND DISPLAY
3. INCLUDE WMB BODYPACK AND LAVALIER MICROPHONE AS PER EQUIPMENT LIST
4. CONNECT DATA PORTS AS PER DIAGRAM V302 ON PAGE T700
5. LOCATED IN RACK 'R2'

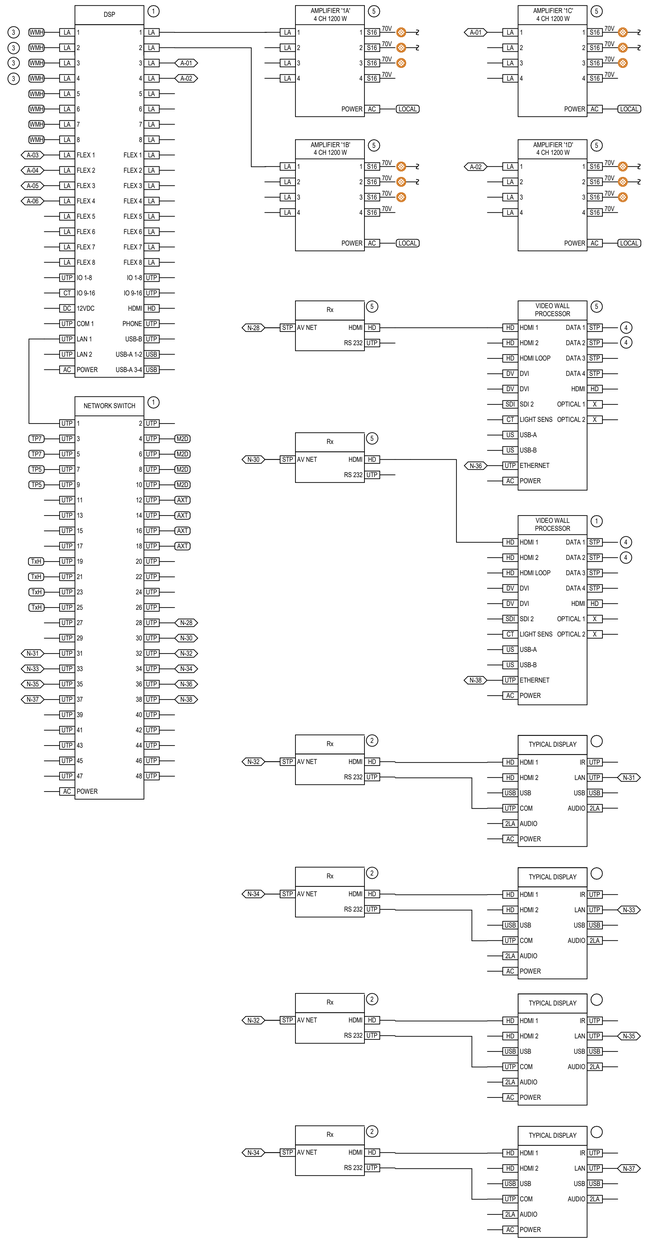

DIAGRAM V301 MULTI-PURPOSE ROOM AV SIGNAL FLOW
NTS

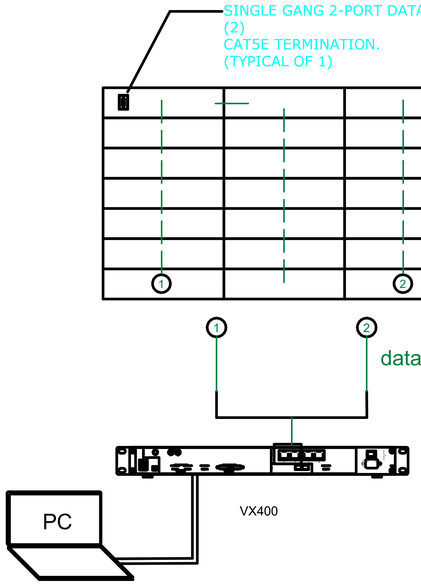

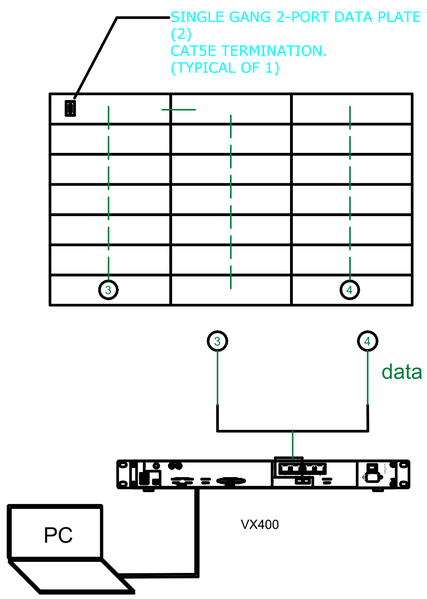

PRODUCT	K2.5 V3
PANEL SIZE (WxH)	1000x250 MM
PANEL RESOLUTION (WxH)	400x100 PIXELS
PANEL ARRAY (WxH)	(3 x 7) x 2
SCREEN SIZE (WxH)	(3000 x 1750) x 2 MM
SCREEN RESOLUTION (WxH)	(1200 x 700) x 2 PIXELS
PANEL POWER MAX.	90 W
SCREEN POWER MAX.	3780 W

DIAGRAM V302 VIDEO WALL CONNECTION DIAGRAM
NTS

MHTN ARCHITECTS
MHTN Architects, Inc.
280 South 400 West
Suite 250
Salt Lake City, Utah 84101
Telephone (801) 595-6700
www.mhtn.com

BNA CONSULTING
4225 Lake Park Blvd, Suite 275
West Valley City, UT 84120
P: 801.532.2196
F: 801.532.2305
www.bnaconsulting.com
SALT LAKE ST GEORGE

JORDAN SCHOOL DISTRICT

JORDAN LEARNING CENTER

3706 WEST 9800 SOUTH
SOUTH JORDAN, UT 84009

©2023 MHTN ARCHITECTS, INC.
Confidentiality Notice:
This document is intended for use on the Project identified herein by individuals who are professionally involved in the design, permitting, bidding and construction of the Project. MHTN Architects, Inc. grants limited rights to distribute and reproduce this document for this express purpose only. Distribution, printing or copying this document for purposes other than those indicated is strictly prohibited. If a digital copy of this document is received in error, please delete it.

SEAL:

MHTN PROJECT NO. 2024528

Original drawing is 30 x 42. Do not scale contents of this drawing.

REVISIONS
CONTRACTOR TO VERIFY DRAWINGS IN FIELD USE REFLECT LAST REVISION DATE.

NO.	DATE	DESCRIPTION

ISSUE
CONSTRUCTION DOCUMENTS
AUGUST 29, 2024

SHEET NAME
AUDIOVISUAL DIAGRAMS

SHEET NUMBER
T700

Autodesk Docs://2024528 JSD Retail Remodel/24133 - JSD - LEARNING Center ELEC V24.rvt
8/28/2024 10:16:5 AM

GENERAL DIAGRAM NOTES:

A. CONDUIT SHALL BE RAN POINT-TO-POINT FROM EQUIPMENT RACK JUNCTION BOX TO EACH DEVICE BACK BOX OR PULL BOX FOR DEVICES. PROVIDE PULL STRINGS IN ALL CONDUITS AND TETHER AT EACH TERMINATING JUNCTION BOX END.

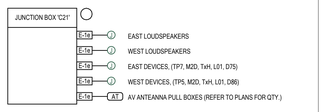

DIAGRAM V102 FOOTBALL FIELD / PRESS BOX CONDUIT RISER
NTS

DIAGRAM NOTES:

1. LOCATED IN RACK 'R1'.
2. SECURE DEVICE TO PROJECTOR.
3. DOCUMENT CAMERA IN SCIENCE/ART/CTE ROOM ONLY.
4. USE GLOBAL CACHE IP TO RS-232 OR EQUIVALENT.

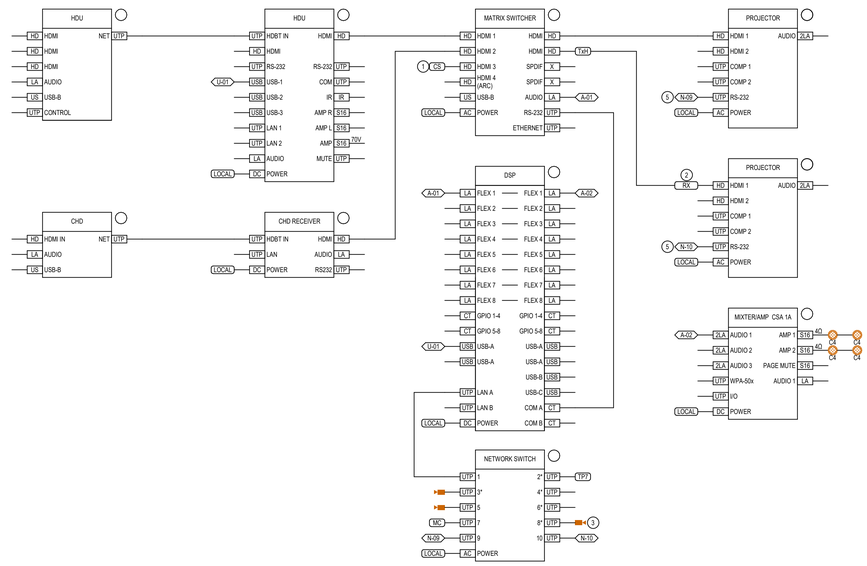

DIAGRAM V254 SCIENCE/ART/CTE CLASSROOM SIGNAL FLOW
NTS

DIAGRAM NOTES:

1. LOCATED IN RACK 'R1' .
2. SDIF TO ANALOG CONVERTER SUM SIGNAL TO MONO.
3. SECURE DEVICE TO PROJECTOR.
4. DOCUMENT CAMERA IN SCIENCE/ART/CTE ROOM ONLY.
5. USE GLOBAL CACHE IP TO RS-232 OR EQUIVALENT.

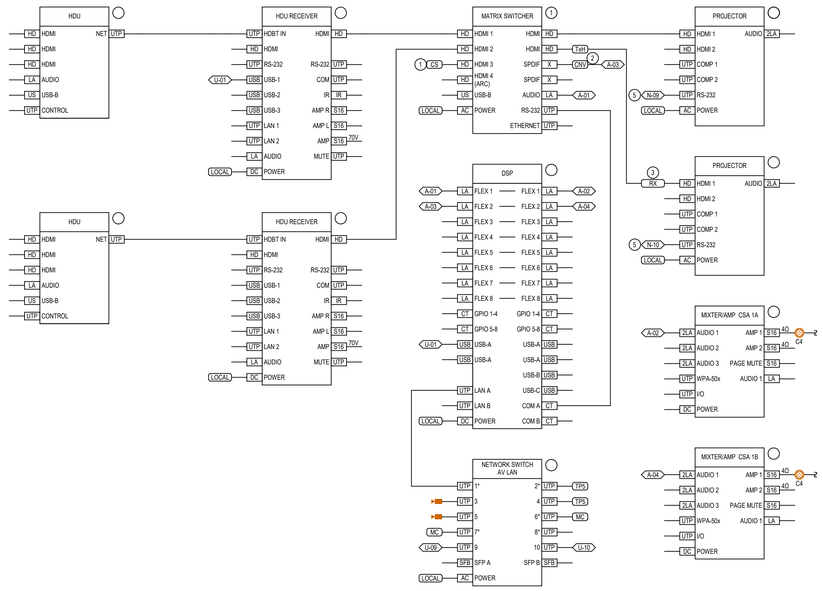

DIAGRAM V259 DIVISIBLE LEARNING STUDIO SIGNAL FLOW
NTS

MHTN ARCHITECTS

MHTN Architects, Inc.
280 South 400 West
Suite 250
Salt Lake City, Utah 84101
Telephone (801) 595-6700
www.mhtn.com

BNA CONSULTING
4225 Lake Park Blvd, Suite 275
West Valley City, UT 84120

P: 801.532.2196
F: 801.532.2305

www.bnaconsulting.com

JORDAN SCHOOL DISTRICT

JORDAN LEARNING CENTER

3706 WEST 9800 SOUTH
SOUTH JORDAN, UT 84009

©2023 MHTN ARCHITECTS, INC.

Confidentiality Notice
This document is intended for use on the Project identified herein by individuals and companies involved in the design, permitting, bidding and construction of the Project. MHTN Architects, Inc. grants limited rights to distribute and reproduce this document for those purposes only. Any other distribution, copying or reproduction of this document for purposes other than those indicated is strictly prohibited. If a digital copy of this document is received in error, please delete it.

SEAL

MHTN PROJECT NO. 2024528

Original drawing is 30 x 42. Do not scale contents of this drawing.

REVISIONS
CONTRACTOR TO VERIFY DRAWINGS IN FIELD USE REFLECT LAST REVISION DATE.

NO.△	DATE	DESCRIPTION

ISSUE
CONSTRUCTION DOCUMENTS
AUGUST 29, 2024

SHEET NAME
AUDIOVISUAL DIAGRAMS

SHEET NUMBER
T701

Autodesk Docs://2024528 JSD Retail Remodel/24133 - JSD LEARNING Center ELEC V24.rvt
8/28/2024 10:10:52 AM

DIAGRAM NOTES:

1. REFER TO ARCHITECTURAL DRAWINGS, ELECTRICAL DRAWINGS AND SPECIFICATIONS FOR MOUNTING HEIGHTS.
2. RECEPTACLE, LOW VOLTAGE WALL PLATES SHALL BE MOUNTED BEHIND SHORT-THROW ENCLOSURE. PROVIDE JUNCTION BOX SIMILAR TO HUBBELL HBL260 WITH A SINGLE GANG MUD RING. PROVIDE SINGLE GANG PASS THROUGH WALL PLATE.
3. PROJECTOR MOUNTING BRACKET CAN NOT BE CENTERED ON SCREEN/WHITEBOARD. A SLIGHT OFFSET IS REQUIRED FOR THE PROJECTOR TO LINE UP WITH THE SCREEN. FOLLOW MANUFACTURERS INSTALLATION INSTRUCTIONS FOR ROUGH-IN LOCATIONS. REFER TO MOUNTING BRACKET TEMPLATE FOR CUT OUT LOCATIONS. COORDINATE SCREEN/WHITEBOARD LOCATIONS WITH ARCHITECTURAL DRAWINGS.

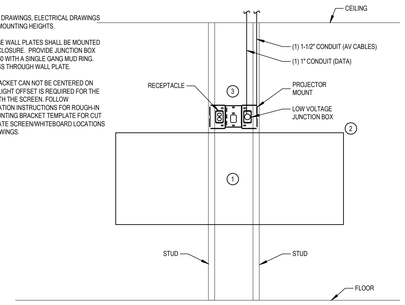

DIAGRAM V045 TYPICAL CLASSROOM SHORT-THROW PROJECTOR MOUNT
NTS

KEYNOTES:

1. REFER TO MANUFACTURER'S INSTALLATION INSTRUCTIONS FOR ROUGH-IN/INFORMATION.
2. CENTER DISPLAY OVER FLAT PANEL DISPLAY WALL BOX. REFER TO SPECIFICATIONS FOR MAKE AND MODEL OF FLAT PANEL DISPLAY WALL BOX.
3. PROVIDE DEVICES SHOWN WITHIN ACCESSORY BOX. REFER TO PLANS FOR WALL BOX LOCATIONS
4. REFER TO PLANS FOR CONDUIT REQUIREMENTS. PROVIDE ONE SPARE 1"ONDUIT TO ACCESSIBLE CEILING FROM WALL BOX IF NO CONDUIT IS SHOWN ON PLANS GOING TO THE ACCESSIBLE CEILING.
5. DATA CONNECTION AND/OR COAXIAL CONNECTION. REFER TO PLANS FOR QUANTITY AND DEVICES

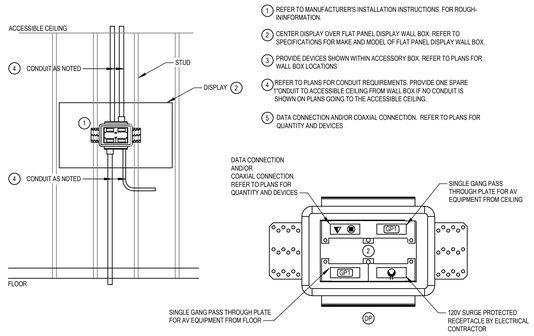

DIAGRAM V031 FLAT PANEL DISPLAY WALL BOX
NTS

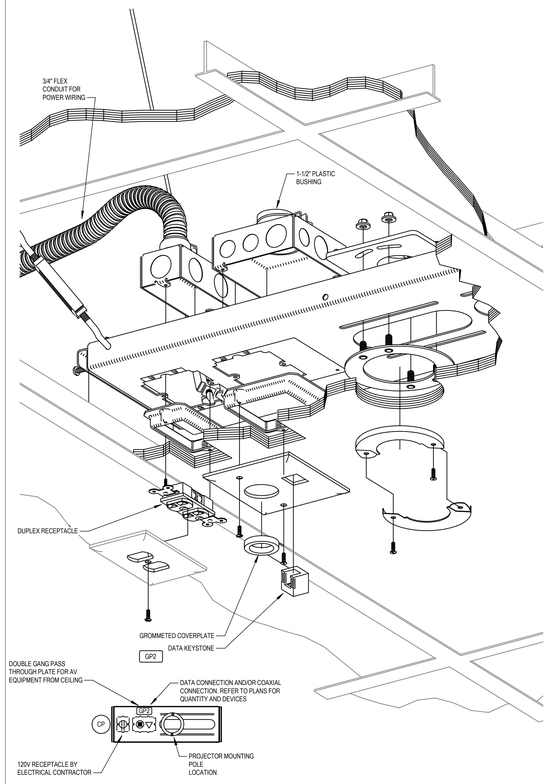

DIAGRAM V001 SUSPENDED CEILING PROJECTOR MOUNT
NTS

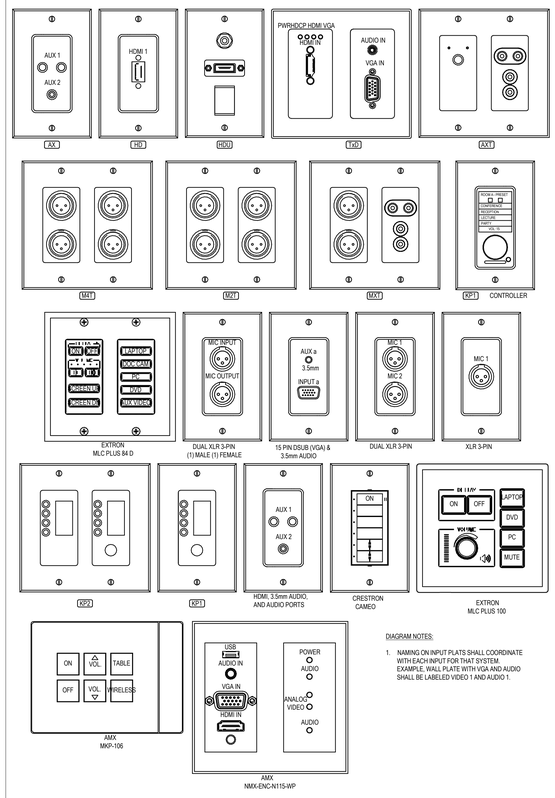

DIAGRAM NOTES:

1. NAMING ON INPUT PLATS SHALL COORDINATE WITH EACH INPUT FOR THAT SYSTEM. EXAMPLE: WALL PLATE WITH VGA AND AUDIO SHALL BE LABELED VIDEO 1 AND AUDIO 1.

DIAGRAM V100 TYPICAL AV WALL PLATES
NTS

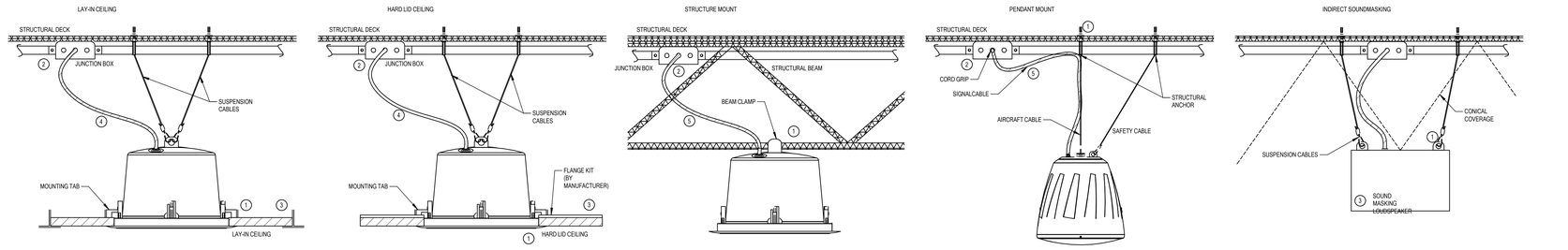

DIAGRAM V010 TYPICAL CEILING LOUDSPEAKER INSTALLATION METHODS
NTS

DIAGRAM NOTES:

1. AV CONTRACTOR IS RESPONSIBLE FOR DETERMINING FINAL MOUNTING METHOD AND REQUIRED MOUNTING ACCESSORIES BASED ON CEILING TYPE AND INSTALLATION REQUIREMENTS.
2. POSITION JUNCTION BOX OVER LOUDSPEAKER LOCATION SHOWN. INSTALL WITH BLANK COVER FACING DOWNWARD.
3. PROVIDE TILE BRIDGE FOR LAY-IN TILE INSTALLATION. PROVIDE SECONDARY SEISMIC SUPPORT HARDWARE FROM STRUCTURE ABOVE (AS REQUIRED PER AHJ).
4. PROVIDE 1/2" FLEXIBLE CONDUIT AS REQUIRED PER INSTALLATION. FLEXIBLE CONDUIT AND/OR CABLING SHALL NOT DIP BELOW THE LOUDSPEAKER BUT ALLOW ENOUGH CABLE FOR THE LOUDSPEAKER TO BE REPLACED.
5. PROVIDE CABLE GRIP IN JUNCTION BOX WHERE CABLING EXITS. CABLING SHALL BE NEATLY SECURED, OUT OF SITE, TO THE LOUDSPEAKER.
6. PROVIDE SEISMIC SUSPENSION CABLES LONG ENOUGH TO PROVIDE ACCESS TO THE MOUNTING POINT PRIOR TO THE LOUDSPEAKER INSTALLATION. SEISMIC SAFETY CABLES SHALL PREVENT THE LOUDSPEAKER FROM FALLING TO THE FLOOR.

MHTN ARCHITECTS

MHTN Architects, Inc.
280 South 400 West
Suite 250
Salt Lake City, Utah 84101
Telephone (801) 595-6700
www.mhtn.com

BNA CONSULTING
4225 Lake Park Blvd, Suite 275
West Valley City, UT 84120
P: 801.532.2196
F: 801.532.2305
www.bnaconsulting.com
SALT LAKE ST GEORGE

JORDAN SCHOOL DISTRICT

JORDAN LEARNING CENTER

3706 WEST 9800 SOUTH
SOUTH JORDAN, UT 84095

©2023 MHTN ARCHITECTS, INC.

Confidentiality Notice
This document is intended for use on the Project identified herein by individuals and companies involved in the design, permitting, bidding and construction of the Project. MHTN Architects, Inc. grants limited rights to distribute and reproduce this document for this express purpose only. Distribution, printing or copying this document for purposes other than those indicated is strictly prohibited. If a digital copy of this document is received in error, please delete it.

SEAL

MHTN PROJECT NO. 2024528

Original drawing is 30 x 42. Do not scale contents of this drawing.

REVISIONS
CONTRACTOR TO VERIFY DRAWINGS IN FIELD USE REFLECT LAST REVISION DATE.

NO.△	DATE	DESCRIPTION

ISSUE
CONSTRUCTION DOCUMENTS
AUGUST 29, 2024

SHEET NAME
AUDIOVISUAL DIAGRAMS

SHEET NUMBER
T702

Autodesk Docs://2024528 -JSD Retail Remodel/24133 - JSD LEARNING Center ELEC V24.rvt
8/28/2024 10:16:54 AM